NORTH TRUCKEE DRAIN REALIGNMENT
PHASE 3
IMPROVEMENT PLANS
PUBLIC WORKS PROJECT NO. WA-2017-022
BID NO. 16/17-006

MAY, 2016

City of Sparks Officials

Geno Martini, Mayor
Vacant, Council Member Ward 1
Ed Lawson, Council Member Ward 2
Ron Smith, Council Member Ward 3
Charlene Bybee, Council Member Ward 4
Ron Schmitt, Council Member Ward 5
Steve Driscoll, City Manager

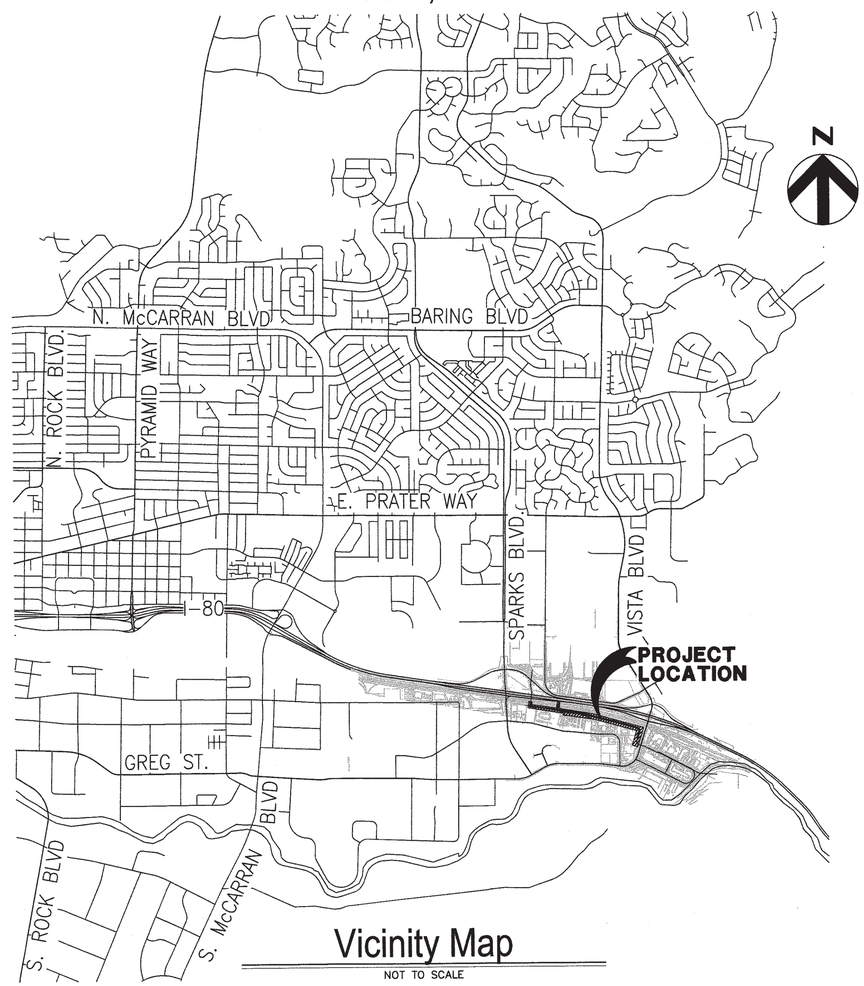

Vicinity Map
NOT TO SCALE

Funding Source

CITY OF SPARKS

"CITY OF SPARKS COMMUNITY SERVICES DEPARTMENT"

APPROVED BY: _____ DATE: 5-3-16
JOHN MARTINI, P.E.
COMMUNITY SERVICES DIRECTOR

APPROVED BY: _____ DATE: 5-3-2016
ANDREW M. HUMMEL, P.E.
UTILITY MANAGER

C:\pwworking\phx\d0351221\G-01x.dwg 05/02/16 7:28am POXBORRO

REV No	DATE	DESCRIPTION	APPROVED

DESIGNED BY: PEO
DRAWN BY: PEO
CHECKED BY: NL
APPROVED BY: NL
SCALE
HORIZ:
VERT:
FIELD BOOK

HDR Engineering, Inc.
9790 Gateway Dr. Blvd.
Suite 101
Reno, NV 89521
Phone: 775-337-4700

City of Sparks

NORTH TRUCKEE DRAIN REALIGNMENT PHASE 3
COVER SHEET
CITY OF SPARKS, NEVADA, PUBLIC WORKS DEPARTMENT

STATE OF NEVADA
PAUL E. OGHLIN
Exp. 12/31/17
CIVIL
No. 10165
PROFESSIONAL ENGINEER
10/22/2016

SHEET No
G-1
SHT OF

Index of Sheets

1. G-1 COVER SHEET
2. G-2 INDEX OF SHEETS
3. G-3 GENERAL NOTES, LEGEND, BASIS OF BEARING, BENCHMARK AND PROJECT LOCATION MAP
4. G-4 ABBREVIATIONS SHEET
5. B-1 BORING LOCATIONS PLAN
6. B-2 BORING LOGS
7. B-3 BORING LOGS AND KEY TO SOIL CLASSIFICATION AND TERMS
8. HC-1 HORIZONTAL CONTROL PLAN SHEET 1
9. HC-2 HORIZONTAL CONTROL PLAN SHEET 2
10. HC-3 HORIZONTAL CONTROL PLAN SHEET 3
11. HC-4 HORIZONTAL CONTROL PLAN SHEET 4
12. HC-5 HORIZONTAL CONTROL PLAN SHEET 5
13. HC-6 HORIZONTAL CONTROL PLAN SHEET 6
14. EA-1 EASEMENT KEY MAP
15. EA-2 EASEMENT PLAN "NTD" STA 18+00 TO STA 39+00
16. EA-3 EASEMENT PLAN "NTD" STA 39+00 TO STA 54+00
17. D-1 DEMOLITION KEY MAP
18. D-2 DEMOLITION PLAN "NTD" STA 18+00 TO STA 39+00
19. D-3 DEMOLITION PLAN "NTD" STA 39+00 TO STA 54+00
20. C-1 RCB PLAN AND PROFILE KEY MAP
21. C-2 RCB PLAN AND PROFILE "NTD" STA 18+00 TO STA 28+00
22. C-3 RCB PLAN AND PROFILE "NTD" STA 28+00 TO STA 39+00
23. C-4 RCB PLAN AND PROFILE "NTD" STA 39+00 TO STA 50+00
24. C-5 RCB PLAN AND PROFILE "NTD" STA 50+00 TO STA 54+00
25. C-6 RCB PLAN AND PROFILE "E" STA 321+00 TO STA 327+65.18 AND "W" STA 218+00 TO STA 219+61.41
26. C-7 PARALLEL AND LATERAL STORM DRAIN KEY MAP
27. C-8 PARALLEL AND LATERAL STORM DRAIN PLAN AND PROFILE SHEET 1
28. C-9 PARALLEL AND LATERAL STORM DRAIN PLAN AND PROFILE SHEET 2
29. C-10 PARALLEL AND LATERAL STORM DRAIN PLAN AND PROFILE SHEET 3
30. C-11 PARALLEL AND LATERAL STORM DRAIN PLAN AND PROFILE SHEET 4
31. C-12 GRADING PLAN KEY MAP
32. C-13 GRADING PLAN "NTD" STA 18+00 TO 29+00 AND "E" STA 325+00 TO STA 326+00
33. C-14 GRADING PLAN "NTD" STA 29+00 TO 39+00
34. C-15 GRADING PLAN "NTD" STA 39+00 TO 50+00
35. C-16 GRADING PLAN "NTD" STA 50+00 TO STA 54+00 AND RIPRAP AREA "NTD" STA 37+00
36. XS-1 TYPICAL ROAD CROSS SECTIONS "W" AND "NTD" CROSS SECTIONS
37. XS-2 "E" AND "NTD" CROSS SECTIONS
38. RS-1 UPRR CROSS SECTIONS UPRR STA 216+00.00 TO STA 217+00.00
39. RS-2 UPRR CROSS SECTIONS UPRR STA 217+60.29 TO STA 218+00.00
40. RS-3 UPRR CROSS SECTIONS UPRR STA 219+00.00 TO STA 220+78.22
41. RS-4 UPRR CROSS SECTIONS UPRR STA 221+00.00 TO STA 222+18.53
42. RS-5 UPRR CROSS SECTIONS UPRR STA 223+00.00 TO STA 225+00.00
43. RS-6 UPRR CROSS SECTIONS UPRR STA 225+75.86 TO STA 227+00.00
44. RS-7 UPRR CROSS SECTIONS UPRR STA 228+00.00 TO STA 230+00.00
45. RS-8 UPRR CROSS SECTIONS UPRR STA 231+00.00 TO STA 233+00.00
46. RS-9 UPRR CROSS SECTIONS UPRR STA 233+04.13 TO STA 235+00.00
47. RS-10 UPRR CROSS SECTIONS UPRR STA 236+00.00 TO STA 237+00.00
48. RS-11 UPRR CROSS SECTIONS UPRR STA 237+72.88 TO STA 239+00.00
49. RS-12 UPRR CROSS SECTIONS UPRR STA 245+78.65 TO STA 247+48.78
50. DT-1 STANDARD DETAILS
51. DT-2 STANDARD DETAILS
52. DT-3 STANDARD DETAILS
53. DT-4 STANDARD DETAILS
54. DT-5 STANDARD DETAILS
55. DT-6 STORM DRAIN BACKFLOW PREVENTION VAULT DETAILS STA 23+58
56. DT-7 STORM DRAIN BACKFLOW PREVENTION VAULT DETAILS STA 34+59
57. S-1 STRUCTURE GENERAL NOTES
58. S-2 CONFLUENCE STRUCTURE NO. 1
59. S-3 CONFLUENCE STRUCTURE NO. 1
60. S-4 CONFLUENCE STRUCTURE NO. 1
61. S-5 CONFLUENCE STRUCTURE NO. 1
62. S-6 CONFLUENCE STRUCTURE NO. 2
63. S-7 CONFLUENCE STRUCTURE NO. 2
64. S-8 CONFLUENCE STRUCTURE NO. 2
65. S-9 CONFLUENCE STRUCTURE NO. 2
66. S-10 ACCESS VAULT DETAILS FOR DOUBLE 8'X8' RCB
67. S-11 ACCESS VAULT DETAILS FOR DOUBLE 14'X10' RCB
68. S-12 ACCESS VAULT DETAILS FOR DOUBLE 14'X10' RCB
69. S-13 ACCESS VAULT DETAILS FOR DOUBLE 14'X10' RCB
70. S-14 BEND DETAILS FOR SINGLE 6'X6' RCB (CAST-IN-PLACE)
71. S-15 BEND DETAILS FOR DOUBLE 14'X10' RCB (CAST-IN-PLACE)
72. S-16 REMOVABLE CONCRETE SLAB DETAILS FOR MAINTENANCE ACCESS
73. S-17 CAST-IN-PLACE MANHOLE RISER DETAILS FOR CAST-IN-PLACE DOUBLE 8'x8' RCB
74. S-18 CAST-IN-PLACE MANHOLE RISER DETAILS FOR CAST-IN-PLACE DOUBLE 14'x10' RCB
75. S-19 MANHOLE RISER DETAILS
76. S-20 RCP CONNECTIONS TO MAIN RCB STORM DRAIN DETAILS
77. S-21 BAR BEND DIAGRAMS
78. S-22 BAR BEND DIAGRAMS
79. S-23 MAIN STORM DRAIN STRUCTURE LIST 1
80. S-24 MAIN STORM DRAIN STRUCTURE LIST 2
81. R-1 UPRR CULVERTS 246.12 AND (248.29) EXTENSION AND BRIDGE 246.27 (248.44) REPLACEMENT ROSEVILLE SUBDIVISION GENERAL NOTES, CONSTRUCTION NOTES AND DRAWING SCHEDULE
82. R-2 UPRR CULVERTS 246.12 (248.29) EXTENSION WITH TWIN 6'x6' RCB CULVERTS ROSEVILLE SUBDIVISION LAYOUT
83. R-3 UPRR CULVERT 246.12 (248.29) EXTENSION WITH TWIN 6'x6' RCB CULVERTS ROSEVILLE SUBDIVISION FRAMING AND REINFORCING
84. R-4 UPRR BRIDGE 246.27 (248.44) REPLACE W/ 8'x8' CIP CONCRETE BOX CULVERT ROSEVILLE SUBDIVISION LAYOUT
85. R-5 UPRR BRIDGE246.27 (248.44) REPLACE W/ DOUBLE 8'x8' CIP CONCRETE CULVERT ROSEVILLE SUBDIVISION DEMOLITION
86. R-6 UPRR CULVERT 246.27 (248.44) REPLACE W/ DOUBLE 8'x8' CIP CONCRETE CULVERT ROSEVILLE SUBDIVISION SECTION 1
87. R-7 UPRR CULVERT 246.27 (248.44) REPLACE W/ DOUBLE 8'x8' CIP CONCRETE CULVERT ROSEVILLE SUBDIVISION SECTION 2
88. R-8 UPRR BRIDGE 246.27 (248.44) REPLACE W/ DOUBLE 8'x8' CIP CONCRETE CULVERT ROSEVILLE SUBDIVISION SECTION 3 FRAMING
89. R-9 UPRR BRIDGE 246.27 (248.44) REPLACE W/ DOUBLE 8'x8' CIP CONCRETE CULVERT ROSEVILLE SUBDIVISION SECTION 3 REINFORCING
90. R-10 UPRR BRIDGE 246.27 (248.44) REPLACE W/ DOUBLE 8'x8' CIP CONCRETE CULVERT ROSEVILLE SUBDIVISION SECTION 3 BENDING DIAGRAM UPRR CULVERT 246.17 (248.34) EXTENSION COLLAR DETAILS
91. R-11 TEMPORARY UPRR CROSSING PLAN ROSEVILLE SUBDIVISION
92. R-12 TEMPORARY UPRR CROSSING PLAN ROSEVILLE SUBDIVISION
93. R-13 TEMPORARY UPRR CROSSING PLAN ROSEVILLE SUBDIVISION
94. R-14 TEMPORARY UPRR CROSSING PLAN ROSEVILLE SUBDIVISION
95. R-15 TEMPORARY UPRR CROSSING PLAN ROSEVILLE SUBDIVISION
96. U-1 UTILITY KEY MAP
97. U-2 UTILITY PLAN SHEET 1

REV No	DATE	DESCRIPTION	APPROVED

DESIGNED BY: PEO
DRAWN BY: PEO
CHECKED BY: NL
APPROVED BY: NL
SCALE
HORIZ:
VERT:
FIELD BOOK

HDR Engineering, Inc.
9805 Double R Blvd.
Suite 101
Reno, NV 89521
Phone: 775-337-4700

City of Sparks

NORTH TRUCKEE DRAIN REALIGNMENT PHASE 3

INDEX OF SHEETS

CITY OF SPARKS, NEVADA, PUBLIC WORKS DEPARTMENT

STATE OF NEVADA PROFESSIONAL ENGINEER NEIL LAUGHLIN Exp. 12/31/17 CIVIL No. 10165 5/11/16

SHEET No
G-2

SHT OF

C:\pwworking\phx\d0351221\G-01x.dwg 05/02/16 7:28am POXBORRO

GENERAL NOTES

1. ALL CONSTRUCTION AND MATERIALS SHALL CONFORM TO THE CONTRACT DOCUMENTS.

2. IN ACCORDANCE WITH GENERALLY ACCEPTED CONSTRUCTION PRACTICES, THE CONTRACTOR WILL BE SOLELY AND COMPLETELY RESPONSIBLE FOR THE CONDITIONS OF THE JOB SITE INCLUDING SAFETY OF ALL PERSONS AND PROPERTY DURING PERFORMANCE OF THE WORK. THIS REQUIREMENT WILL APPLY CONTINUOUSLY AND SHALL NOT BE LIMITED TO NORMAL WORKING HOURS.

3. THE CONTRACTOR SHALL BE RESPONSIBLE FOR THE DESIGN AND CONSTRUCTION OF PROPER SHORING OF TRENCHES IN ACCORDANCE WITH OCCUPATIONAL SAFETY LAWS. THE DUTIES OF THE PROJECT COORDINATOR DO NOT INCLUDE REVIEW OF THE ADEQUACY OF THE CONTRACTOR'S SAFETY IN, ON, OR NEAR THE CONSTRUCTION SITE.

4. SHOULD IT APPEAR THAT THE WORK TO BE DONE, OR ANY MATTER RELATIVE THERETO, IS NOT SUFFICIENTLY DETAILED OR EXPLAINED ON THESE PLANS, THE CONTRACTOR SHALL CONTACT THE PROJECT COORDINATOR FOR SUCH FURTHER EXPLANATIONS AS MAY BE NECESSARY.

5. THE CONTRACTOR SHALL BE RESPONSIBLE FOR PROVIDING AND MAINTAINING THE STORMWATER POLLUTION PREVENTION PLAN (SWPPP). THE CONTRACTOR SHALL MAINTAIN ALL EXISTING DRAINAGE FACILITIES WITHIN THE CONSTRUCTION AREA UNTIL NEW DRAINAGE IMPROVEMENTS ARE IN PLACE AND FUNCTIONAL OR UNTIL COMPLETION OF CONSTRUCTION. THE CONTRACTOR SHALL TAKE ALL NECESSARY AND PROPER PRECAUTIONS TO PROTECT ADJACENT PROPERTIES FROM ANY AND ALL DAMAGE THAT MAY OCCUR FROM STORM WATER RUNOFF AND/OR DEPOSITION OF DEBRIS RESULTING FROM ANY AND ALL WORK IN CONNECTION WITH CONSTRUCTION.

6. THE CONTRACTOR IS RESPONSIBLE FOR PROVIDING ADEQUATE CONVEYANCE OF STORM RUNOFF AND NORMAL BASE FLOWS THROUGH THE SITE DURING CONSTRUCTION. THE SWPPP PRODUCED BY THE CONTRACTOR WILL DESCRIBE HOW OFF SITE FLOWS WILL BE HANDLED DURING CONSTRUCTION.

7. THE CONTRACTOR SHALL TAKE REASONABLE MEASURES TO PROTECT EXISTING IMPROVEMENTS FROM DAMAGE. ALL SUCH IMPROVEMENTS DAMAGED BY THE CONTRACTOR'S OPERATION SHALL BE REPAIRED OR RECONSTRUCTED TO THE OWNER'S SATISFACTION AT THE EXPENSE OF THE CONTRACTOR.

8. IN AREAS WHERE TREES MAY BE IMPACTED OR ARE INTERFERING WITH CURB/GUTTER AND/OR SIDEWALK AND DRIVEWAY APRONS, THE CONTRACTOR SHALL SCHEDULE ALL WORK REQUIRED TO REMOVE TREES AND BUILD IMPROVEMENTS WITH THE CITY OF SPARKS PARKS MAINTENANCE AT 353-2369 WITH AT LEAST A THREE (3) DAY ADVANCE NOTICE. THE CONTRACTOR SHALL EMPLOY AN ISA CERTIFIED ARBORIST TO TRIM TREE ROOTS PER THE INSTRUCTION OF THE CITY OF SPARKS PARKS DEPARTMENT.

9. THE CONTRACTOR SHALL BE RESPONSIBLE FOR IMMEDIATE OFF-SITE DISPOSAL OF ALL BITUMINOUS PAVEMENTS, PORTLAND CEMENT CONCRETE AND REINFORCING STEEL, AND SPOILS.

10. THE LOCATION OF EXISTING UTILITIES SHOWN ON THESE DRAWINGS IS BASED ON THE BEST INFORMATION AVAILABLE TO THE PROJECT COORDINATOR. IT SHALL BE THE CONTRACTOR'S RESPONSIBILITY TO VERIFY THESE LOCATIONS PRIOR TO BEGINNING CONSTRUCTION. SHOULD THE CONTRACTOR FIND ANY DISCREPANCIES BETWEEN THE CONDITION EXISTING IN THE FIELD AND THE INFORMATION SHOWN ON THESE DRAWINGS, THE CONTRACTOR SHALL NOTIFY THE PROJECT COORDINATOR BEFORE PROCEEDING WITH CONSTRUCTION.

11. THE CONTRACTOR SHALL CALL 1-800-227-2600 FOR UTILITY LOCATIONS AT LEAST TWO WORKING DAYS PRIOR TO CONSTRUCTION.

12. THE CONTRACTOR SHALL HAVE THE EXISTING UNDERGROUND UTILITIES LOCATED IN THE CONSTRUCTION AREA. UNDERGROUND UTILITIES DAMAGED BY THE CONTRACTOR DUE TO NEGLIGENCE SHALL BE REPAIRED AT THE CONTRACTOR'S EXPENSE.

13. NOT USED

14. THE CONTRACTOR IS RESPONSIBLE FOR COORDINATION WITH BUSINESSES ADJACENT TO LARKIN CIRCLE DURING DISRUPTION OF TRAFFIC CAUSED BY CONSTRUCTION ACTIVITIES WITHIN LARKIN CIRCLE.

15. THE ENERGY GRADE LINE (EGL) AND HYDRAULIC GRADE LINE (HGL) SHOWN ON THE PROFILES FOR THE MAIN RCB REPRESENT THE COMPUTED LEVELS ASSOCIATED WITH A CONCURRENT 117-YEAR STORM EVENT FOR THE TRUCKEE RIVER AND THE NORTH TRUCKEE DRAIN WATERSHEDS. IN THIS SCENARIO, THE TAILWATER FROM THE TRUCKEE RIVER DICTATES THE MOST CONSERVATIVE HYDRAULIC CONDITION FOR THE NTD SYSTEM. THE HGL AND EGL SHOWN FOR THE PARALLEL AND LATERAL STORM DRAIN ARE BASED ON A LOCALIZED 100-YEAR STORM EVENT WITH FULL FLOW AT THE OUTLET.

	117 Year Event
North Truckee Drain at Outfall	1,400 cfs
Truckee River at NTD Outfall	24,870 cfs

16. THE CONTRACTOR IS RESPONSIBLE FOR CONSTRUCTION DEWATERING AND OBTAINING THE PERMITS NECESSARY TO DISCHARGE THE WATER GENERATED BY THE OPERATION.

17. THE CONTRACTOR IS RESPONSIBLE FOR OBTAINING ALL REQUIRED PERMITS AND CLEARANCES FOR STAGING AREAS, BORROW SITES, WASTE DISPOSAL SITES, AND ALL MATERIAL PROCESSING SITES. THE CONTRACTOR SHALL PROVIDE THE REQUIRED PERMITS AND CLEARANCES TO THE PROJECT COORDINATOR AT THE PRECONSTRUCTION MEETING.

18. THE WASTE DISPOSAL SITE(S) SHALL NOT BE LOCATED IN A WETLAND, WITHIN 200 FEET OF SURFACE WATER, OR IN AN AREA THAT ADVERSELY AFFECTS WILDLIFE, RECREATION, AESTHETIC VALUE OF AN AREA, OR ANY THREATENED OR ENDANGERED SPECIES, AS APPROVED BY THE PROJECT COORDINATOR AND THE CITY OF SPARKS.

19. ALL COSTS ASSOCIATED WITH FURNISHING WASTE DISPOSAL SITE(S), DISPOSING OF WASTE, MAINTAINING CONTROL OF ACCESS (FENCE, GATES, AND SIGNS), AND RECLAMATION OF THE WASTE DISPOSAL SITE(S) SHALL BE INCIDENTAL TO THE VARIOUS CONTRACT ITEMS.

20. THE CONTRACTOR SHALL GIVE WRITTEN NOTICE, WITH A COPY TO THE CITY OF SPARKS AND THE NEVADA DIVISION OF ENVIRONMENTAL PROTECTION (NDEP), 30 DAYS PRIOR TO THE START OF WORK. IN ADDITION, THE CONTRACTOR SHALL GIVE WRITTEN NOTICE TO THE PROJECT COORDINATOR 7 DAYS PRIOR TO THE COMMENCEMENT OF THE WORK SO THE PROJECT COORDINATOR MAY NOTIFY NDEP OF THE DAY WORK WILL START.

21. THE CONTRACTOR SHALL GIVE NOTICE TO THE PROJECT COORDINATOR WHEN CONTAMINATED SOIL IS ENCOUNTERED ON THE PROJECT. THE PROJECT COORDINATOR WILL CONTACT THE CITY SO THEY CAN CONTACT THE NDEP TO INSPECT AND MONITOR REMOVAL OF ANY CONTAMINATED SOIL.

22. THE CONTRACTOR SHALL NOTIFY THE UNITED STATES GEOLOGICAL SURVEY (USGS) FOUR WEEKS PRIOR TO THE PLANNED REMOVAL OF GAUGE STATION. CONTACT STEVE BERRIS OR MARSHA GIPSON AT (775) 887-7693/(775) 720-0464.

23. THE CONTRACTOR SHALL NOTIFY THE NATIONAL OCEANIC AND ATMOSPHERIC ADMINISTRATION (NOAA) PRIOR TO THE PLANNED REMOVAL OF THE USC&GS BENCH MARK MONUMENT. CONTACT BILL STONE AT (240) 988-5919 TO GET THE MONUMENT OFFICIALLY MOVED WITH ELEVATIONS TRANSFERRED.

BASIS OF BEARING

BASIS OF BEARING FOR THIS SURVEY BEING THE CITY OF SPARKS MODIFIED 83/94 NEVADA STATE COORDINATE PLANE SYSTEM WEST ZONE ALL DISTANCES AND COORDINATES SHOWN ARE GROUND. VALUES TO OBTAIN GRID VALUES DIVIDE THOSE SHOWN BY THE COMBINED FACTOR OF 1.000197939

BENCHMARK

BASIS OF ELEVATIONS BEING THE CITY OF SPARKS NAVD88 VERTICAL CONTROL NETWORK BASED FROM BM#43 = ELEVATION 4395.06 FEET.

PROPOSED FEATURES LEGEND

- TEE WITH GATE VALVE
- CHECK VALVE (SHADED IF EXISTING)
- FIRE HYDRANT ASSEMBLY
- 45° ELBOW, FLANGED
- 90° FLANGED ELBOW
- AIR/VAC
- THRUST BLOCK
- CAP/PLUG
- BACKFLOW PREVENTER
- WATER METER
- SLEEVE COUPLING
- MANHOLE
- CONSTRUCTION EASEMENT
- PERMANENT EASEMENT
- CENTERLINE
- CHANNEL/SLOPE
- MAJOR CONTOUR
- MINOR CONTOUR
- STORM DRAIN RCP
- STORM DRAIN RCB
- GRADE LINE
- FENCE LINE
- SAWCUT LINE
- CURB AND GUTTER
- ACCESS ROAD
- DAYLIGHT LINE
- EDGE OF PAVEMENT
- PROPERTY/RIGHT-OF-WAY LINE
- VAULT

EXISTING FEATURES LEGEND

- INDEX CONTOUR
- APPROXIMATE INDEX
- INDEX DEPRESSION
- INTERMEDIATE CONTOUR
- APPROXIMATE INTERMEDIATE
- INTERMEDIATE DEPRESSION
- EDGE OF PAVEMENT
- DIRT ROAD
- JEEP/FOOT TRAIL
- CURB LINE
- GUTTER/CONCRETE EDGE
- GUARD-RAIL
- RAILROAD
- FENCE
- RETAINING WALL
- FENCE ON RW
- BLOCK WALL
- MEDIAN WALL
- STONE WALL
- TRENCH/STOPE
- TAILINGS/TOE
- WATER EDGE
- INTERMITTENT DRAINAGE
- DITCH
- MISCELLANEOUS BOUNDARIES
- TREELINE
- BRUSHLINE
- SS — SANITARY SEWER
- STORM DRAIN
- W — WATER
- IRR — IRRIGATION WATER
- UGE — UNDERGROUND ELECTRIC
- OHU — OVERHEAD UTILITY
- OSG — OVERHEAD SIGNAL
- OHP/CATV — OVERHEAD POWER/TV CABLE
- UG FO — UNDERGROUND FIBER OPTICS
- G — GAS
- UGE(ABONDONED) — UNDERGROUND ELECTRIC ABANDONED
- N,E,Z CONTROL POINT
- Z ONLY CONTROL POINT
- SURVEY MONUMENT
- POWER POLES
- POLE ANCHOR
- TRANSMISSION TOWER
- LIGHT POLE
- SIGN POST — POST/POLE
- SIGN
- FIRE HYDRANT
- MANHOLE
- SANITARY SEWER MANHOLE
- STORM DRAIN MANHOLE
- TELEPHONE MANHOLE
- VALVE COVER
- VALVE
- TRAFFIC SIGNAL
- R.R./CROSSWALK SIGNAL
- MAIL BOX
- MISC. OBJECT
- METER
- MARSH
- PROSPECT/EXCAVATION
- SHAFT
- UTIL. VAULT/BOX
- METER BOX
- STORM DRAIN CATCH BASIN
- BUILDING
- COVERED AREA
- EX. TREE

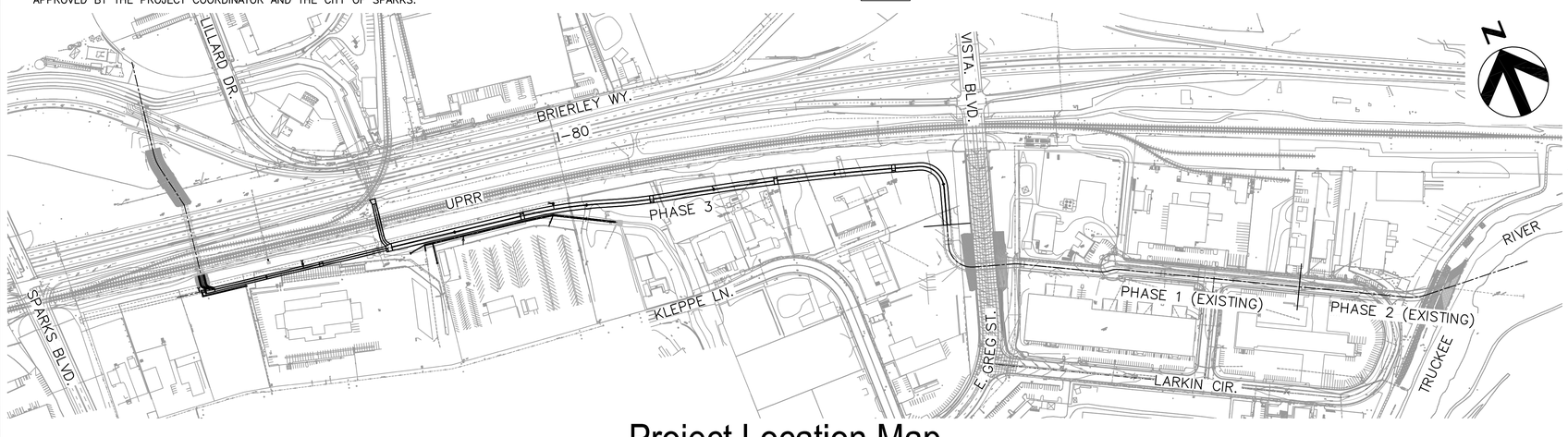

Project Location Map

NTS

NOTE

THIS PLAN SET IS AN INTERIM PLAN SET FOR REVIEW. THE INTENT OF THIS SUBMITTAL IS TO PROVIDE A SET OF PLANS FOR REVIEW BY THE CITY OF SPARKS (CITY) AND UNITED STATES ARMY CORPS OF ENGINEERS (USACE) TO GET BUY-IN ON THE DESIGN TO DATE, IDENTIFY ITEMS THAT MAY BE MISSING, AND MINIMIZE CHANGES DURING FINAL DESIGN. THIS PLAN SET IS INTENDED TO INCLUDE ALL OF THE PROPOSED CONSTRUCTION ITEMS BUT MANY OF THE ITEMS ARE NOT SHOWN TO THE LEVEL OF DETAIL REQUIRED FOR CONSTRUCTION. THIS IS NOT A FINAL PLAN SET AND IS NOT INTENDED FOR CONSTRUCTION. INFORMATION NOT FULLY DETAILED INCLUDES THE FOLLOWING ITEMS:

1. COST ESTIMATE
2. SPECIFICATIONS

DISCLAIMER NOTE

UTILITY LOCATIONS SHOWN HEREON ARE APPROXIMATE ONLY. IT SHALL BE THE CONTRACTOR'S RESPONSIBILITY TO DETERMINE THE EXACT HORIZONTAL AND VERTICAL LOCATION OF ALL EXISTING UNDERGROUND AND OVERHEAD UTILITIES PRIOR TO COMMENCING CONSTRUCTION. NO REPRESENTATION IS MADE THAT ALL EXISTING UTILITIES ARE SHOWN HEREON. THE ENGINEER ASSUMES NO RESPONSIBILITY FOR UTILITIES NOT SHOWN OR UTILITIES NOT SHOWN IN THEIR PROPER LOCATION.

Avoid cutting underground utility lines. It's costly.
Call before you Dig.
1-800-227-2600
UNDERGROUND SERVICE ALERT (USA)

SAFETY ALERT
Call before you Overhead
775-834-7590
NV Energy Construction Line
24hrs. Prior Notice Required
OVERHEAD SERVICE ALERT

REV No.	DATE	DESCRIPTION	APPROVED

DESIGNED BY: PEO
DRAWN BY: PEO
CHECKED BY: NL
APPROVED BY: NL
SCALE
HORIZ:
VERT:
FIELD BOOK

HDR Engineering, Inc.
9805 Double R Blvd.
Suite 101
Reno, NV 89521
Phone: 775-337-4700

City of Sparks

NORTH TRUCKEE DRAIN REALIGNMENT PHASE 3

GENERAL NOTES, LEGEND, BASIS OF BEARING, BENCHMARK AND PROJECT LOCATION MAP

CITY OF SPARKS, NEVADA, PUBLIC WORKS DEPARTMENT

STATE OF NEVADA PROFESSIONAL ENGINEER
NEIL LAUGHLIN
Exp. 12/31/17
CIVIL
No. 10165
5/11/16

SHEET No
G-3

SHT OF

C:\pwworking\phx\d0351221\G-01x.dwg 05/02/16 7:28am POXBORRO

ABBREVIATIONS

AC = ASPHALTIC CONCRETE
ACI = AMERICAN CONCRETE INSTITUTE
ACP = ASBESTOS CEMENT PIPE
A/E = ARCHITECT / ENGINEER
ABAN = ABANDON
ANSI = AMERICAN NATIONAL STANDARDS INSTITUTE
APN = ASSESSOR'S PARCEL NUMBER
APRX. = APPROXIMATELY
ASSY = ASSEMBLY
AVAR = AIR VACUUM AIR RELIEF (VALVE)
AGGR = AGGREGATE
AGG. = AGGREGATE
APPROX = APPROXIMATE
APPD = APPROVED
ASTM = AMERICAN SOCIETY FOR TESTING AND STANDARDS
ASSHTO = AMERICAN ASSOC. OF STATE HIGHWAY & TRANS. OFFICIALS
AWWA = AMERICAN WATER WORKS ASSOCIATION
BC = BACK OF CURB
BCR = BEGIN CURB RETURN
BF = BOTH FACES, BOTTOM FACE
BFC = BACK FACE OF CURB
BFV = BUTTERFLY VALVE
BM = BENCHMARK
BR = BRIDGE
BRW = BOTTOM ROCKERY WALL
BW = BACK OF WALK
BVC = BEGIN VERTICAL CURVE
BW = BACK WALL
CATV = CABLE TELEVISION
C–C = CENTER TO CENTER
C&G = CURB AND GUTTER
C = CHANNEL
CB = CATCH BASIN
CFS = CUBIC FEET PER SECOND
CF or CU.FT. = CUBIC FEET
C.I. = CAST IRON
CL/℄ = CENTERLINE
CLSM = CONTROLLED LOW STRENGTH MATERIAL
CLR. or Cl. = CLEARANCE
CML&C = CONCRETE MORTAR LINED AND COATED
CMP = CORRUGATED METAL PIPE
CMU = CONCRETE MASONRY UNIT
CONC. = CONCRETE
CONST.JT. = CONSTRUCTION JOINT
CO = CLEANOUT
COL = COLUMN
COMP = COMPACT
CONSTR = CONSTRUCTION
COR = CITY OF RENO
CORP. = CORPORATION
CPLG. = COUPLING
CTB = CEMENT TREATED BASE
CTR = CENTER
CU.YD. = CUBIC YARD
CTRS. = CENTERS
D = DEPTH
DI = DROP INLET
D.I. = DUCTILE IRON
DIP = DUCTILE IRON PIPE
DIST = DISTRICT
DEMO = DEMOLISH OR DEMOLITION
DR = DRIVE OR DRAIN
Ø or DIA. = DIAMETER
DOC = DOCUMENT
DOM. = DOMESTIC
EA. = EACH
E.C. = END OF CURVE
EFF = EFFLUENT
EG = EXISTING GRADE/GROUND
E.F. = EACH OF FACE
EGL = ENERGY GRADE LINE
ELEC. = ELECTRICAL
ELEV./ EL = ELEVATION
ELL = ELBOW
ENGR. = ENGINEER
EP = EDGE OF PAVEMENT
ERW = EFFLUENT REUSE WATER
EXIST./ EX = EXISTING
(E) = EXISTING
EQ = EQUAL
ETC = ET CETERA
EVC = END VERTICAL CURVE
EW = EACH WAY
EWEF = EACH WAY EACH FACE
F.F./ FF = FINISH FLOOR
FCA = FLANGE COUPLING ADAPTER
FG = FINISH GRADE
F.L./ FL = FLOW LINE
FDTN = FOUNDATION
FH = FIRE HYDRANT
FLG = FLANGE
FO = FINISHED OPENING
FOC = FACE OF CURB
FTG = FOOTING
FO = FIBER OPTIC CABLE
FS = FINISH SURFACE
FT. = FEET
FTG = FOOTING
F.V. = FLUSH VALVE
FUT = FUTURE
G = GAS
GA = GAUGE
GAL. = GALLON
GALV = GALVANIZED
GB = GRADE BREAK
GIS = GEOGRAPHIC INFORMATION SYSTEM
G.V. = GATE VALVE
GRTG = GRATING
HERCP = HORIZONTAL ELLIPTICAL REINFORCED CONCRETE PIPE
HGL = HYDRAULIC GRADE LINE
HP = HIGH POINT
HPG = HIGH PRESSURE GAS
HW = HIGH WATER
INC. = INCORPORATED
I.D. = INSIDE DIAMETER
INV = INVERT
IE = INVERT ELEVATION
IRR. = IRRIGATION
KO = KNOCKOUT
K = KIPS
L= = LONG/ LENGTH
L / LT = LEFT OF
L.F./ LF = LINEAR FEET
LP = LOW POINT
LBS/LF = POUNDS PER LINEAR FEET
LLC = LIMITED LIABILITY COMPANY
MAX./ (MAX) = MAXIMUM
MC = MANHOLE COVER
MIN. = MINIMUM
MISC = MISCELLANEOUS
M.J. = MECHANICAL JOINT
ML = MAINLINE
(N) = NEW
N = NORTH OR NEUTRAL
NA = NOT APPLICABLE
NC = NORMALLY CLOSED
NDOT = NEVADA DEPARTMENT OF TRANSPORTATION
N.F. = NEAR FACE
NG = NATURAL GRADE
NO = NORMALLY OPEN
NOAA = NATIONAL OCEANIC AND ATMOSPHERIC ADMINISTRATION
NTD = NORTH TRUCKEE DRAIN
NTS/ N.T.S. = NOT TO SCALE
O.C. = ON CENTER
O.E. = OR EQUAL
OHP = OVERHEAD POWER
O.D./ OD = OUTSIDE DIAMETER
OF/CI = OWNER FURNISHED CONTRACTOR INSTALLED
OGL = ORIGINAL GRADE LINE
OVFL = OVERFLOW
OSHA = OCCUPATIONAL SAFETY & HEALTH ADMIN.
PAVE = PAVEMENT
PBS = PLANTMIX BITUMINOUS SURFACE
(P) = PROPOSED
P.C./ PC = POINT OF CURVE
PCC = POINT OF COMPOUND CURVE
P.C.C. = PORTLAND CEMENT CONC.
PE = POLYETHYLENE
PEN = PENETRATE
PERP = PERPENDICULAR
P/L = PROPERTY LINE
PL = PLATE
PO = PUSH–ON
± = PLUS or MINUS
PPCBR = PORTABLE PRECAST BARRIER RAIL
PRELIM = PRELIMINARY
PRC = POINT REVERSE CURVE
PROP = PROPOSED
PRV = PRESSURE REDUCING VALVE
PSF = POUNDS PER SQUARE FOOT
PSI = POUNDS PER SQUARE INCH
PVG = PAVING
PT = POINT OF TANGENT
PVC = POLYVINYL CHLORIDE PIPE
PVI = POINT OF VERTICAL INTERSECTION
$Q_{ult}100$ = 100 YEAR ULTIMATE CONDITION DESIGN FLOW
QTY = QUANTITY
R / (R) = RADIUS OR RADIAL
R / RT = RIGHT OF
R & D = REMOVE AND DISPOSE
RCB = REINFORCED CONCRETE BOX
RCP = REINFORCED CONCRETE PIPE
RED = REDUCER
REF = REFERENCE
REINF = REINFORCEMENT
RES = RESTRAINED
RGRCP = RUBBER GASKET REINFORCED CONCRETE PIPE
RTC = REGIONAL TRANSPORTATION COMMISSION
RR = RAILROAD
R/W / ROW = RIGHT–OF–WAY
REQ'D = REQUIRED 23
ROS = RECORD OF SURVEY
R–O–W = RIGHT OF WAY
SAN = SQUARE FOOT
SD = STORM DRAIN
SDMH = STORM DRAIN MANHOLE
SDPWC = STANDARD DETAILS FOR PUBLIC WORKS CONSTRUCTION
SDR / DR = STANDARD DIMENSION RATIO
SF = SQUARE FEET
SHT = SHEET
SIM = SIMILAR
SLV = SLEEVE
SPEC = SPECIFICATION
SQ = SQUARE
SQ.FT. = SQUARE FEET
SS = SANITARY SEWER
SSMH = SANITARY SEWER MANHOLE
SSPC = SOCIETY FOR PROTECTIVE COATINGS
SSPWC = STANDARDS SPECIFICATIONS FOR PUBLIC WORKS CONSTRUCTION
STA = STATION
STD.DWG.NO. = STANDARD DRAWING NUMBER
STL = STEEL
ST = STAINLESS STEEL
SST = STAINLESS STEEL
S/W / SW = SIDEWALK
SPA. = SPACING
STD. = STANDARD
TB = THRUST BLOCK
T&B = TOP AND BOTTOM
TC = TOP OF BACK OF CURB
TECS = TMWA ENGINEERING & CONSTRUCTION SPECS TRANSPORTATION
TELE / TEL = TELEPHONE
TEMP = TEMPORARY
T / THK = THICK
TM = TRACT MAP
TMH = TOP OF MANHOLE
TMWA = TRUCKEE MEADOWS WATER AUTHORITY
THW = THERMO PLASTIC HEAT AND WATER RESISTANT
TOE = TOE OF CHANNEL
TOP = TOP OF CHANNEL
TOC = TOP OF CURB
TOF = TOP OF FOOTING
TP = TELEPHONE POLE
TR = TRANSITE
TRANS = TRANSITION
TRW = TOP ROCKERY WALL
TW = TOP OF WALL
(TYP) / (TYP.) = TYPICAL
UGE = UNDER GROUND ELECTRICAL
UL = UNDERWRITERS LABORATORY
UNO = UNLESS NOTED OTHERWISE
U.O.N. = UNLESS OTHERWISE NOTED
UPRR = UNION PACIFIC RAILROAD
U.S. = UNITED STATES
USC&GS = UNITED STATES COAST AND GEODETIC SURVEY
USGS = UNITED STATES GEOLOGICAL SURVEY
USACE = UNITED STATES ARMY CORP OF ENGINEERS
VA = VALVE
V.C. = VERTICAL CURVE
VCP = VITRIFIED CLAY PIPE
V.G. = VALLEY GUTTER
VC = VERTICAL CURVE
VERT = VERTICAL
W = WATER
W/ = WITH
WWF = WELDED WIRE FABRIC
W.O. = WORK ORDER
WM = WATER METER
XTC = X–TRU COAT PIPE

REV No	DATE	DESCRIPTION	APPROVED

DESIGNED BY: PEO
DRAWN BY: PEO
CHECKED BY: NL
APPROVED BY: NL
SCALE
HORIZ:
VERT:
FIELD BOOK

HDR Engineering, Inc.
9805 Double R Blvd.
Suite 101
Reno, NV 89521
Phone: 775-337-4700

City of Sparks

NORTH TRUCKEE DRAIN REALIGNMENT PHASE 3

ABBREVIATIONS SHEET

CITY OF SPARKS, NEVADA, PUBLIC WORKS DEPARTMENT

STATE OF NEVADA PROFESSIONAL ENGINEER NOEL A. LAUGHLIN Exp. 12/31/17 CIVIL No. 10165 5/11/16

SHEET No
G-4
SHT OF

C:\pwworking\phx\d0351221\G-01x.dwg 05/02/16 7:28am POXBORRO

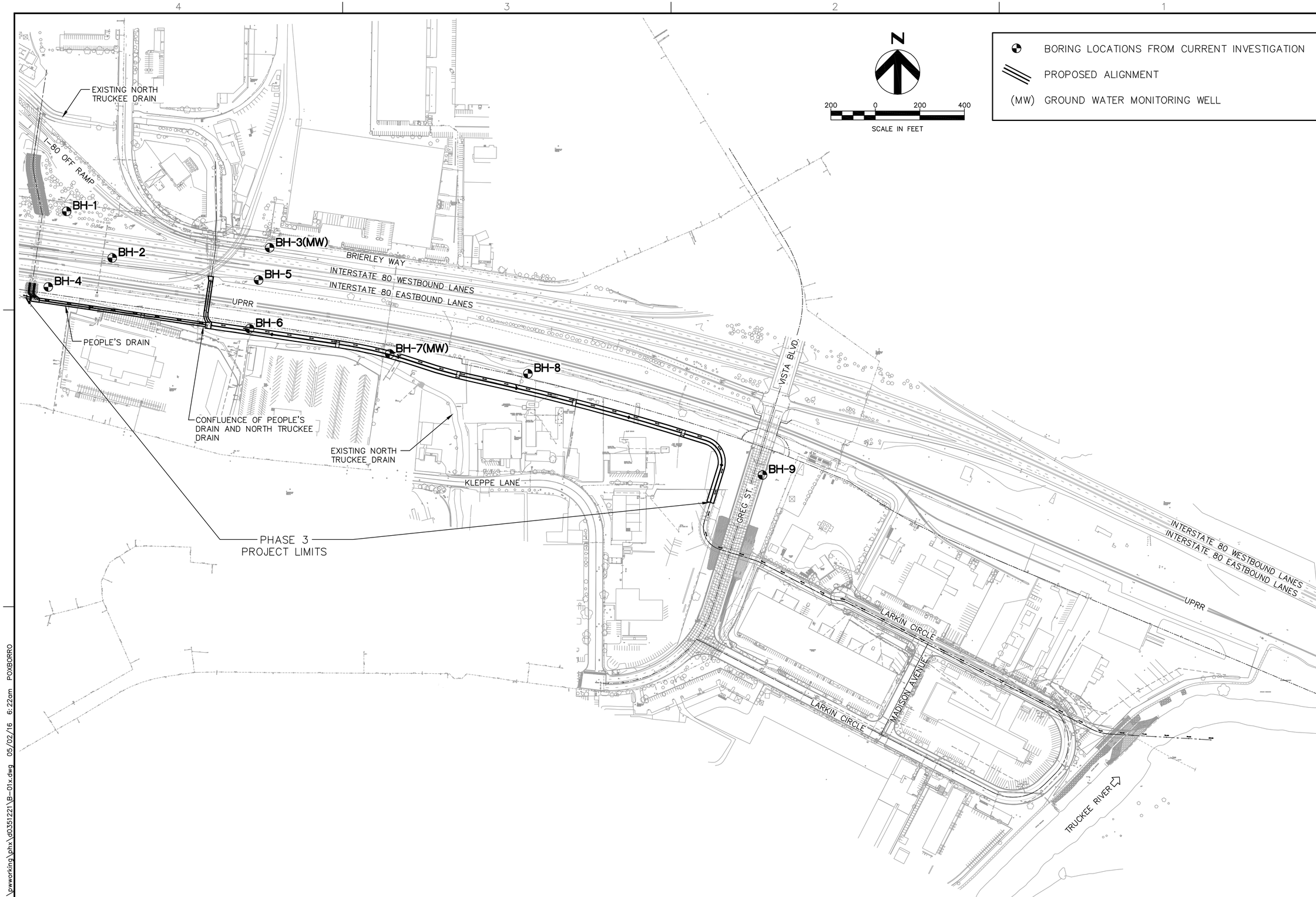

REV No.	DATE	DESCRIPTION	APPROVED

DESIGNED BY: PEO
DRAWN BY: PEO
CHECKED BY: NL
APPROVED BY: NL
SCALE
HORIZ: 1"=200'
VERT: N/A
FIELD BOOK

HDR Engineering, Inc.
9805 Double R Blvd.
Suite 101
Reno, NV 89521
Phone: 775-337-4700

City of Sparks

NORTH TRUCKEE DRAIN REALIGNMENT PHASE 3

BORING LOCATIONS PLAN

CITY OF SPARKS, NEVADA, PUBLIC WORKS DEPARTMENT

STATE OF NEVADA
NOEL LAUGHLIN
Exp. 12/31/17
CIVIL
PROFESSIONAL ENGINEER No. 10165
5/11/16

SHEET No
B-1
SHT OF

C:\pwworking\phx\d0351221\B-01x.dwg 05/02/16 6:22am POXBORRO

Dry Density lb/ft3	Moisture Content %	Blows/ Ft.	Percent Passing #200	SOIL DESCRIPTION
111	8	64		**FILL: BROWN SILTY SAND (SM)** slightly moist, non-plastic fines, fine to coarse sand, fine to coarse gravel.
		37		**FILL: PURPLE BROWN CLAYEY SAND (SC)** slightly moist to moist, medium plastic fines, fine to coarse sand, fine to coarse gravel. Color change to olive brown
		18		**DARK BROWN TO GRAY BROWN LEAN CLAY (CL)** moist, stiff, high plastic fines, fine to medium sand.
		11		pp = 3.25 tsf (pocket penetrometer)
		8		Color change to light brown, very moist, soft pp = 0.5 tsf (pocket penetrometer)
		10	97 PI = 21 LL = 48	pp = 2.25 tsf (pocket penetrometer)
		68	9	**BLUE GRAY TO GRAY BROWN POORLY GRADED GRAVEL WITH SILT AND SAND (GP-GM)** wet, very dense, non-plastic fines, fine to coarse sand, fine to coarse gravel.
		50/5"		Approximately 1 foot of heave

DATE: 4-9-09 LOGGED BY: D. ADAMS
TOTAL DEPTH: 26.0 feet EQUIPMENT: MOBILE B-57 WITH AUTOHAMMER

KLEINFELDER Bright People. Right Solutions.

LOG OF B-01

PROPOSED NORTH TRUCKEE DRAIN REALIGNMENT
GEOTECHNICAL INVESTIGATION
SPARKS, NEVADA

PLATE **2**

DRAFTED BY: K. Carter PROJECT NO. 102314.104

Dry Density lb/ft3	Moisture Content %	Blows/ Ft.	Percent Passing #200	SOIL DESCRIPTION
				3 INCHES ASPHALT CONCRETE
				6 INCHES AGGREGATE BASE
		33		**FILL: BROWN CLAYEY GRAVEL WITH SAND (GC)** moist, medium plastic fines, fine to coarse sand, fine to coarse gravel.
	9	30	16 PI = 13 LL = 31	
		12		Color change to light brown to brown, increase in fines, some gravel
		25		**BLACK TO DARK BROWN LEAN CLAY (CL)** moist, stiff, medium plastic fines, some fine sand.
		23		pp = 1.75 tsf (pocket penetrometer)
		23		Color change to gray pp = 0.5 tsf (pocket penetrometer)
		71/9"		Sampler driving on gravel or possible cobbles greater than 2½ inches in diameter
		10		**GRAY POORLY GRADED SAND WITH SILT (SP-SM)** wet, loose, non-plastic fines, fine to medium sand.
		28		Medium dense, with fine to coarse gravel

DATE: 4-9-09 LOGGED BY: D. ADAMS
TOTAL DEPTH: 31.5 feet EQUIPMENT: MOBILE B-57 WITH AUTOHAMMER

KLEINFELDER Bright People. Right Solutions.

LOG OF B-02

PROPOSED NORTH TRUCKEE DRAIN REALIGNMENT
GEOTECHNICAL INVESTIGATION
SPARKS, NEVADA

PLATE **3**

DRAFTED BY: K. Carter PROJECT NO. 102314.104

Well Graphics	Well Design Info.	Dry Density lbs/ft3	Moisture Content %	Blows/ Ft.	Percent Passing #200	USCS	SOIL DESCRIPTION
	CEMENT			14			**12 INCHES AGGREGATE BASE**
	BENTONITE	101	24		18 PI = 15 LL = 31		**FILL: PINK BROWN CLAYEY GRAVEL WITH SAND (GC)** moist, medium plastic fines, fine to coarse sand, fine to coarse gravel.
	SAND			45			Color change to dark brown to black
	SCREEN			66/9"			Moist Color change to gray brown
				50/5"	17 PI = 16 LL = 32		Drill rig grinding from 9½ to 10 feet **PURPLE BROWN CLAYEY GRAVEL (GC)** dry, very dense, medium plastic fines, fine to coarse sand, fine to coarse gravel.
				50/3"			
				20/0"			Hard drilling
				53			**BROWN TO YELLOWISH BROWN POORLY GRADED GRAVEL WITH SAND (GP)** wet, very dense, non-plastic fines, fine to coarse sand, fine to coarse gravel.
				59			

DATE: 4-8-09 LOGGED BY: D. ADAMS
TOTAL DEPTH: 26.5 feet EQUIPMENT: MOBILE B-57 WITH AUTOHAMMER

KLEINFELDER Bright People. Right Solutions.

LOG OF B-03 (MW)

PROPOSED NORTH TRUCKEE DRAIN REALIGNMENT
GEOTECHNICAL INVESTIGATION
SPARKS, NEVADA

PLATE **4**

DRAFTED BY: K. Carter PROJECT NO. 102314.104

Dry Density lb/ft3	Moisture Content %	Blows/ Ft.	Percent Passing #200	SOIL DESCRIPTION
77	15	36	54 LL = 60 PI = 33	**GRAYISH BROWN GRAVELLY FAT CLAY WITH SAND (CH)** dry to slightly moist, very stiff, high plastic fines, fine to coarse sand, fine to coarse angular gravel.
		31		**LIGHT GRAY BROWN FAT CLAY (CH)** moist, hard, medium plastic fines, fine to coarse sand.
		39		Wet
		13		
	42		87 LL = 59 PI = 28	Stiff pp = 1.25 tsf (pocket penetrometer) Hard
		46		
		20		
95	30		4	**DARK BROWN TO BLACK POORLY GRADED SAND (SP)** wet, medium dense, fine to medium sand.
		33		With gravel Dense
		50/4"		Very dense

DATE: 7-1-09 LOGGED BY: S. RAHE
TOTAL DEPTH: 25.5 feet EQUIPMENT: CME 55, CATHEAD, TRACK MOUNTED

KLEINFELDER Bright People. Right Solutions.

LOG OF B-04

PROPOSED NORTH TRUCKEE DRAIN REALIGNMENT
GEOTECHNICAL INVESTIGATION
SPARKS, NEVADA

PLATE **5**

DRAFTED BY: K. Carter PROJECT NO. 102314.104

Dry Density lb/ft3	Moisture Content %	Blows/ Ft.	Percent Passing #200	SOIL DESCRIPTION
				3 INCHES PCC PAVEMENT
				3 INCHES AGGREGATE BASE
		32		**FILL: OLIVE BROWN SILTY SAND (SM)** moist, non-plastic fines, fine to coarse sand, trace fine gravel.
				FILL: BROWN TO RED BROWN CLAYEY SAND (SC) moist, medium plastic fines, fine to coarse sand, fine to coarse gravel.
		9		
		20		**DARK BROWN TO BLACK FAT CLAY (CH)** moist, stiff, high plastic fines, fine to medium sand, some fine gravel.
		42		
102	13	50/5"		**PURPLE CLAYEY SAND (SC)** dry to slightly moist, very dense, medium to high plastic fines, fine to coarse sand, fine to coarse gravel. Moist
		35		Wet, dense
			50 LL = 47 PI = 26	
		43		
		86/11"		**PURPLE POORLY GRADED GRAVEL WITH SAND (GP)** wet, very dense, non-plastic fines, fine to coarse sand, fine to coarse gravel.

DATE: 4-8-09 LOGGED BY: D. ADAMS
TOTAL DEPTH: 31.5 feet EQUIPMENT: MOBILE B-57 WITH AUTOHAMMER

KLEINFELDER Bright People. Right Solutions.

LOG OF B-05

PROPOSED NORTH TRUCKEE DRAIN REALIGNMENT
GEOTECHNICAL INVESTIGATION
SPARKS, NEVADA

PLATE **6**

DRAFTED BY: K. Carter PROJECT NO. 102314.104

Dry Density lb/ft3	Moisture Content %	Blows/ Ft.	Percent Passing #200	SOIL DESCRIPTION
		16		**FILL: GRAY BROWN CLAYEY SAND (SC)** dry, low plastic fines, fine to coarse sand, organics.
	28	25	95 LL = 69 PI = 41	**RED TO BLACK FAT CLAY (CH)** slightly moist, very stiff, high plastic fines. Color change to dark brown to black, very moist to wet, very stiff, high plastic fines, fine to coarse sand. pp > 4.5 tsf (pocket penetrometer)
		30		
		8		**DARK BROWN SANDY LEAN CLAY (CL)** wet, medium stiff, low plastic fines, fine sand. pp = 0.5-1.0 tsf (pocket penetrometer)
		22		Color change to dark green, stiff pp = 1.0-2.5 tsf (pocket penetrometer)
		12		
		50/5"		Drill rig grinding on possible cobbles or boulders pp = 0.5-2.5 tsf (pocket penetrometer) Increasing fine sand
	42	84/10"	69 LL = 42 PI = 20	pp = 0.5-1.75 tsf (pocket penetrometer)

DATE: 7-1-09 LOGGED BY: S. RAHE
TOTAL DEPTH: 26.5 feet EQUIPMENT: CME 55, CATHEAD, TRACK MOUNTED

KLEINFELDER Bright People. Right Solutions.

LOG OF B-06

PROPOSED NORTH TRUCKEE DRAIN REALIGNMENT
GEOTECHNICAL INVESTIGATION
SPARKS, NEVADA

PLATE **7**

DRAFTED BY: K. Carter PROJECT NO. 102314.104

Well Graphics	Well Design Info.	Dry Density lbs/ft3	Moisture Content %	Blows/ Ft.	Percent Passing #200	USCS	SOIL DESCRIPTION
	CEMENT			23			**FILL: BROWN WELL-GRADED SAND WITH CLAY, GRAVEL AND COBBLES (GW-GC)** dry, low plastic fines, fine to coarse sand, angular gravel up to ¾ inches in diameter.
	BENTONITE			50/5"			Coarse gravel and cobbles
	SAND			60			**FILL: BROWN WELL-GRADED SAND WITH SILT (SW-SM)** moist, non-plastic fines, fine to coarse sand, fine gravel. Sampler encountered gravel/cobbles > 2.5 inches in diameter
	FILTER			36			Sampler encountered gravel/cobbles > 1.5 inches in diameter
				29			**DARK BROWN FAT CLAY (CH)** moist, very stiff, medium plastic fines, fine sand. pp = 2.0 tsf (pocket penetrometer)
			38	14	97 LL = 78 PI = 48		Stiff pp = 1.75-2.25 tsf (pocket penetrometer)
				11			Medium stiff, low to medium plastic fines pp = 1.0-1.5 tsf (pocket penetrometer)
				91/11"	94 9		**GRAY TO BROWN POORLY GRADED SAND WITH SILT (SP-SM)** wet, very dense, non-plastic fines, fine to coarse sand, rounded gravel up to 1½ inches in diameter. Interbedded with approximately 6 inch layers of lean clay
				25	43		**BROWN CLAYEY SAND (SC)** wet, medium dense, low plastic fines, fine to coarse sand, fine to coarse gravel.

DATE: 7-2-09 LOGGED BY: J. PEASE
TOTAL DEPTH: 31.0 feet EQUIPMENT: MOBILE B-57, AUTOHAMMER

KLEINFELDER Bright People. Right Solutions.

LOG OF B-07 (MW)

PROPOSED NORTH TRUCKEE DRAIN REALIGNMENT
GEOTECHNICAL INVESTIGATION
SPARKS, NEVADA

PLATE **8**

DRAFTED BY: K. Carter PROJECT NO. 102314.104

Dry Density lb/ft3	Moisture Content %	Blows/ Ft.	Percent Passing #200	SOIL DESCRIPTION
		34		**FILL: REDDISH BROWN SILTY SAND (SM)** dry, non to low plastic fines, fine to coarse sand, fine to coarse gravel, organics (roots), debris.
		15		
				DARK BROWN LEAN CLAY WITH SAND (CL) slightly moist, stiff, low to medium plastic fines, fine to coarse sand.
		60		
		2		Hard pp > 4.5 tsf (pocket penetrometer) **BROWN SILTY SAND WITH GRAVEL (SM)** slightly moist, very loose, non to low plastic fines, fine to coarse sand, fine to coarse gravel.
96	29	13	63 LL = 35 PI = 16	**REDDISH GRAY BROWN LEAN CLAY (CL)** moist to wet, medium stiff, non-plastic fines, fine to coarse sand. Increase in sand, fine to coarse gravel
		50/2"		
		73	19	**YELLOWISH BROWN SILTY SAND WITH GRAVEL (SM)** wet, very dense, non-plastic fines, fine to coarse sand, fine gravel Lenses of approximately 3-6 inches of reddish brown silt
		25		Medium dense
		50/2"		Very dense

DATE: 7-1-09 LOGGED BY: S. RAHE
TOTAL DEPTH: 31.0 feet EQUIPMENT: CME 55, CATHEAD, TRACK MOUNTED

KLEINFELDER Bright People. Right Solutions.

LOG OF B-08

PROPOSED NORTH TRUCKEE DRAIN REALIGNMENT
GEOTECHNICAL INVESTIGATION
SPARKS, NEVADA

PLATE **9**

DRAFTED BY: K. Carter PROJECT NO. 102314.104

REV No.	DATE	DESCRIPTION	APPROVED

DESIGNED BY: PEO
DRAWN BY: PEO
CHECKED BY: NL
APPROVED BY: NL
SCALE
HORIZ: N/A
VERT: N/A
FIELD BOOK

HDR Engineering, Inc.
9805 Double R Blvd.
Suite 101
Reno, NV 89521
Phone: 775-337-4700

City of Sparks

NORTH TRUCKEE DRAIN REALIGNMENT PHASE 3

BORING LOGS

CITY OF SPARKS, NEVADA, PUBLIC WORKS DEPARTMENT

STATE OF NEVADA PROFESSIONAL ENGINEER NOEL A. LAUGHLIN No. 10165 Exp. 12/31/17 CIVIL 5/11/16

SHEET No **B-2**

SHT OF

C:\pwworking\phx\d0351221\B-01x.dwg 05/02/16 6:22am POXBORRO

Dry Density lb/ft3	Moisture Content %	Blows/ Ft.	Percent Passing #200	Sample	GRAPHIC LOG	SOIL DESCRIPTION
		80/11"				**10 INCHES ASPHALT CONCRETE**
						FILL: RED BROWN SILTY SAND WITH GRAVEL (SM) slightly moist, non to low plastic fines, fine to coarse sand, fine to coarse subrounded gravel.
		82				Increase in gravel
		50/2"				
		75				**FILL: BROWN CLAYEY SAND WITH GRAVEL (SC)** moist, low to medium plastic fines, fine to coarse sand, fine to coarse subrounded to subangular gravel.
		50/5"				
		50/5"				Gravel up to 3 inches in diameter
		50/1"				Increase in fines, coarse sand
						Color change to light gray
	11		42 LL = 37 PI = 19			
		20/0"				Difficult drilling, drill rig grinding on possible cobbles or boulders
		50/2"				
						DARK BROWN FAT CLAY (CH) moist to very moist, stiff, medium to high plastic fines, medium sand. Note: Logged from drill cuttings
						DARK YELLOWISH BROWN POORLY GRADED SAND (SP) moist to wet, very dense, non-plastic fines, fine to coarse sand, some gravel up to 3 inches in diameter.

DEPTH IN FEET: 0, 2, 4, 6, 8, 10, 12, 14, 16, 18, 20, 22, 24, 26, 28, 30, 32, 34

DATE: 7-1-09
TOTAL DEPTH: 51.5 feet
LOGGED BY: S. RAHE
EQUIPMENT: CME 55, CATHEAD, TRACK MOUNTED

KLEINFELDER Bright People. Right Solutions.

LOG OF B-09

PROPOSED NORTH TRUCKEE DRAIN REALIGNMENT
GEOTECHNICAL INVESTIGATION
SPARKS, NEVADA

PLATE **10**

DRAFTED BY: K. Carter PROJECT NO. 102314.104

Dry Density lb/ft3	Moisture Content %	Blows/ Ft.	Percent Passing #200	Sample	GRAPHIC LOG	SOIL DESCRIPTION
		50/4"				
		50/4"				**BLACK FAT CLAY (CH)** moist, stiff, fine sand, organics. pp = 1.5 tsf (pocket penetrometer)
		30				Very stiff pp = 4.5 tsf (pocket penetrometer)
		43				Hard pp =2.5 tsf (pocket penetrometer)
		41				**YELLOWISH BROWN SANDY SILT (ML)** very moist to wet, hard, low plastic fines, fine sand. pp = 2.5 tsf (pocket penetrometer)
						YELLOW BROWN SILTY SAND (SM) moist, medium dense, low plastic fines, fine sand, fine to coarse gravel.
						Gravel up to 2 inches in diameter
		50/6"				Very dense
						Practical refusal at 51.5 feet.

DEPTH IN FEET: 36, 38, 40, 42, 44, 46, 48, 50, 52, 54, 56, 58, 60, 62, 64, 66, 68, 70

DATE: 7-1-09
TOTAL DEPTH: 51.5 feet
LOGGED BY: S. RAHE
EQUIPMENT: CME 55, CATHEAD, TRACK MOUNTED

KLEINFELDER Bright People. Right Solutions.

LOG OF B-09

PROPOSED NORTH TRUCKEE DRAIN REALIGNMENT
GEOTECHNICAL INVESTIGATION
SPARKS, NEVADA

PLATE **10**

DRAFTED BY: K. Carter PROJECT NO. 102314.104

THE UNIFIED SOIL CLASSIFICATION SYSTEM

MAJOR DIVISIONS			GROUP SYMBOLS	TYPICAL NAMES
COARSE GRAINED SOIL More than 50% of the material is LARGER than the No. 200 sieve.	GRAVELS More than 50% of coarse part is LARGER than the No. 4 Sieve.	CLEAN GRAVELS Less than 5% finer than No. 200 Sieve.	GW	Well graded gravels, gravel - sand mixtures, little or no fines, Cu>4 & 1<Cc>3
			GP	Poorly graded gravels or gravel - sand mixtures, little or no fines Cu<4 or 1>Cc<3
		GRAVEL More than 12% finer than No. 200 Sieve.	GM	Silty gravels, gravel - sand - silt mixtures
			GC	Clayey gravels, gravel - sand - clay mixtures
	SANDS More than 50% of coarse part is SMALLER than the No. 4 Sieve.	CLEAN SANDS Less than 5% finer than No. 200 Sieve.	SW	Well graded sands, gravelly sands, little or no or no fines, Cu>6 & 1<Cc>3
			SP	Poorly graded sands or gravelly sands, little or no fines Cu<6 or 1>Cc<3
		SAND More than 12% finer than No. 200 Sieve.	SM	Silty sands, sand - silt mixtures
			SC	Clayey sands, sand - clay mixtures
FINE GRAINED SOIL More than 50% of the material is SMALLER than the No. 200 sieve.	SILTS AND CLAYS Liquid limit LESS than 50	PI-Below A-Line	ML	Inorganic silts, rock flour, or clayey silts of low plasticity
		PI-Above A-Line	CL	Inorganic clays of low to medium plasticity, gravelly clays, sandy clays, silty clays, lean clays
			OL	Organic silts & organic clays of low plasticity
	SILTS AND CLAYS Liquid limit GREATER than 50	PI-Below A-Line	MH	Inorganic silts, clayey silts, or silts of high plasticity
		PI-Above A-Line	CH	Inorganic clays of high plasticity, fat clays
			OH	Organic clays of medium to high plasticity, organic silts
HIGHLY ORGANIC SOILS			PT	Peat & other highly organic soils

BOUNDARY CLASSIFICATIONS: Soils possessing characteristics of two groups are designated by combinations of group symbols.

PARTICLE SIZE LIMITS

BOULDERS	COBBLES	GRAVEL		SAND			SILT	CLAY
		Coarse	Fine	Coarse	Medium	Fine		
12"	3"	3/4"	#4	#10	#40	#200	0.002 mm	

DESCRIPTIVE TERMS USED WITH SOILS

CONSISTENCY & APPARENT DENSITY

	SILTS & CLAYS	SANDS & GRAVELS
Strongest	Hard	Very Dense
	Very Stiff	Dense
	Stiff	Medium Dense
	Medium Stiff	Loose
Weakest	Soft	Very Loose
	Very Soft	

MOISTURE CONTENT

Wettest	Wet
	Very Moist
	Moist
	Slightly Moist
Driest	Dry

- Water Level Observed During Exploration
- Water Level Observed After Exploration

The information included on this graphic representation has been compiled from a variety of sources and is subject to change without notice. Kleinfelder makes no representations or warranties regarding the accuracy of this information or its completeness or timeliness of such information. This document is not intended for use as a land survey product nor is it designed or intended as a construction design document. The use or release of the information contained on this graphic representation is at the sole risk of the party using or releasing the information.

ATTACHED IMAGES: RENO, NV
XREFS:

KLEINFELDER Bright People. Right Solutions.
www.kleinfelder.com

PROJECT NO. 102314.104
DRAWN: AUGUST 27, 2009
DRAWN BY: K. WUJCIK
CHECKED BY: D. ADAMS
FILE NAME: USCS.dwg

KEY TO SOIL CLASSIFICATION AND TERMS

PROPOSED NORTH TRUCKEE DRAIN REALIGNMENT
GEOTECHNICAL INVESTIGATION
SPARKS, NEVADA

PLATE **17**

PLOTTED: 04 Nov 2009, 2:27pm, kcarter
CAD FILE: L:\2009\Drafting\102314\Task 104\ LAYOUT: USCS

SYMBOLS

- Disturbed Bag or Bulk Sample
- Standard Penetration Sample (1.4 inch I.D., 2.0 inch O.D.)
- Modified California (Porter) Sample (2.0 inch I.D., 2.56 inch O.D.)
- California Sample (2.5 inch I.D., 3 inch O.D.)
- No Sample Recovery
- Water Level Observed During Drilling
- Water Level Observed After Drilling

COMMENTS

NOTE: Blow count represents the number of blows required to drive a sampler through the last 12 inches of an 18 inch penetration. A standard 140 pound hammer with a 30.4 inch free fall is used to drive the sampler.

NOTE: The lines separating strata on the logs represent approximate boundaries only. The actual transition may be gradual. No warranty is provided as to the continuity of soil strata between borings.

The information included on this graphic representation has been compiled from a variety of sources and is subject to change without notice. Kleinfelder makes no representations or warranties regarding the accuracy of this information or its completeness or timeliness of such information. This document is not intended for use as a land survey product nor is it designed or intended as a construction design document. The use or release of the information contained on this graphic representation is at the sole risk of the party using or releasing the information.

ATTACHED IMAGES: RENO, NV
XREFS:

KLEINFELDER Bright People. Right Solutions.
www.kleinfelder.com

PROJECT NO. 102314.104
DRAWN: AUGUST 27, 2009
DRAWN BY: K. WUJCIK
CHECKED BY: D. ADAMS
FILE NAME: USCS.dwg

KEY TO BORING LOGS

PROPOSED NORTH TRUCKEE DRAIN REALIGNMENT
GEOTECHNICAL INVESTIGATION
SPARKS, NEVADA

PLATE **18**

PLOTTED: 04 Nov 2009, 2:28pm, kcarter
CAD FILE: L:\2009\Drafting\102314\Task 104\ LAYOUT: KEY

REV No	DATE	DESCRIPTION	APPROVED

DESIGNED BY: PEO
DRAWN BY: PEO
CHECKED BY: NL
APPROVED BY: NL
SCALE
HORIZ: N/A
VERT: N/A
FIELD BOOK

HDR Engineering, Inc.
9805 Double R Blvd.
Suite 101
Reno, NV 89521
Phone: 775-337-4700

City of Sparks

NORTH TRUCKEE DRAIN REALIGNMENT PHASE 3

BORING LOGS AND KEY TO SOIL CLASSIFICATION AND TERMS

CITY OF SPARKS, NEVADA, PUBLIC WORKS DEPARTMENT

STATE OF NEVADA PROFESSIONAL ENGINEER NIGEL LAUGHLIN Exp. 12/31/17 CIVIL No. 10165 5/11/16

SHEET No **B-3**

SHT OF

C:\pwworking\phx\d0351221\B-01x.dwg 05/02/16 6:22am POXBORRO

"W", "E" AND "NTD" LINE TABLE		
LINE	LENGTH	BEARING
L1	402.79'	S08°26'54"W
L2	187.39'	N11°41'22"W
L3	347.93'	S08°18'07"W
L4	32.08'	N51°38'46"W
L5	257.77'	S00°57'28"E
L6	35.14'	S05°19'51"W
L7	67.52'	S01°39'20"E
L8	304.22'	S08°23'41"W
L9	128.98'	N81°38'46"W
L10	36.06'	N76°06'05"W
L11	1363.05'	S81°38'46"E
L12	248.29'	S17°15'41"W
L13	172.50'	S72°44'26"E

BACK OF CURB LINE TABLE		
LINE	LENGTH	BEARING
L19	29.99'	N14°16'09"E
L20	245.15'	S75°14'35"E

"W", "E" AND "NTD" CURVE TABLE					
CURVE	LENGTH	RADIUS	DELTA	CHORD	CHORD BEARING
C1	70.29'	200.00'	20°08'16"	69.93'	S01°37'14"E
C2	20.93'	20.00'	59°56'52"	19.98'	S21°40'20"E
C3	21.95'	200.00'	6°17'20"	21.94'	N02°11'12"E
C4	78.58'	50.00'	90°02'26"	70.74'	S36°37'33"E
C5	369.83'	2000.00'	10°35'41"	369.30'	N76°20'55"W
C6	238.74'	2000.00'	6°50'22"	238.60'	S74°28'16"E
C7	1097.46'	11304.16'	5°33'45"	1097.03'	N75°06'34"W
C8	156.36'	100.00'	89°35'22"	140.91'	N27°32'00"W
C9	157.08'	100.00'	90°00'07"	141.42'	S27°44'23"E
C10	17.58'	100.00'	10°04'26"	17.56'	N67°42'13"W

BIGBY AND ASSOC. CONTROL POINTS TABLE				
PNT. NO.	NORTHING	EASTING	ELEVATION	DESCRIPTION
87	14865227.4300	2311187.1710	4396.99'	5/8 REBAR W B&A CAP
89	14865571.7300	2311526.3510	4396.85'	5/8 REBAR W B&A CAP
93	14867829.2400	2307130.0450	4395.18'	5/8 REBAR W B&A CAP
95	14867787.1600	2307385.5760	4394.49'	5/8 REBAR W B&A CAP
97	14867669.8900	2307859.1420	4395.93'	5/8 REBAR W B&A CAP
108	14865647.8000	2309302.4900	4392.67'	PK NAIL W SHINER
112	14866876.2700	2308779.9500	4395.83'	PK NAIL W SHINER
415	14868283.7200	2306650.4700	4394.40'	5/8 REBAR W B&A CAP
417	14868138.2800	2306556.5100	4395.73'	5/8 REBAR W B&A CAP
418	14868089.2800	2306737.4900	4398.15'	PK NAIL W SHINER
1000	14865601.2400	2311248.4030	4389.51'	5/8 REBAR W B&A CAP
1001	14866039.2700	2310474.7350	4389.94'	5/8 REBAR W B&A CAP
1002	14866243.7500	2309751.0200	4406.69'	5/8 REBAR W B&A CAP
1003	14866817.2600	2309827.6500	4425.36'	5/8 REBAR W B&A CAP
1004	14867121.1500	2308176.9640	4398.71'	5/8 REBAR W B&A CAP
1005	14867347.9000	2307307.4890	4387.55'	5/8 REBAR W B&A CAP
1006	14867548.7600	2307355.4500	4397.63'	5/8 REBAR W B&A CAP
1007	14867556.8700	2306602.6500	4388.62'	5/8 REBAR W B&A CAP
1008	14867453.3300	2306584.8700	4391.67'	5/8 REBAR W B&A CAP
2015	14868155.7600	2307046.0400	4395.06'	BM-43
2038	14865253.5700	2310909.3060	4389.55'	GPS-2046

BENCHMARK AND BASIS OF BEARING

BASIS OF ELEVATIONS BEING THE CITY OF SPARKS NAVD88 VERTICAL CONTROL NETWORK BASED FROM BM#43 = ELEVATION 4395.06 FEET.

BASIS OF BEARING FOR THIS SURVEY BEING THE CITY OF SPARKS MODIFIED 83/94 NEVADA STATE COORDINATE PLANE SYSTEM WEST ZONE ALL DISTANCES AND COORDINATES SHOWN ARE GROUND VALUES TO OBTAIN GRID VALUES DIVIDE THOSE SHOWN BY THE COMBINED FACTOR OF 1.000197939

DISCLAIMER NOTE

UTILITY LOCATIONS SHOWN HEREON ARE APPROXIMATE ONLY. IT SHALL BE THE CONTRACTOR'S RESPONSIBILITY TO DETERMINE THE EXACT HORIZONTAL AND VERTICAL LOCATION OF ALL EXISTING UNDERGROUND AND OVERHEAD UTILITIES PRIOR TO COMMENCING CONSTRUCTION. NO REPRESENTATION IS MADE THAT ALL EXISTING UTILITIES ARE SHOWN HEREON. THE ENGINEER ASSUMES NO RESPONSIBILITY FOR UTILITIES NOT SHOWN OR UTILITIES NOT SHOWN IN THEIR PROPER LOCATION.

Avoid cutting underground utility lines. It's costly.
Call before you Dig.
1-800-227-2600
UNDERGROUND SERVICE ALERT (USA)

SAFETY ALERT
Call before you Overhead
775-834-7590
NV Energy Construction Line
24hrs. Prior Notice Required
OVERHEAD SERVICE ALERT

REV No.	DATE	DESCRIPTION	APPROVED

DESIGNED BY: PEO
DRAWN BY: PEO
CHECKED BY: NL
APPROVED BY: NL
SCALE
HORIZ: 1"=60'
VERT: N/A
FIELD BOOK

HDR Engineering, Inc.
9805 Double R Blvd.
Suite 101
Reno, NV 89521
Phone: 775-337-4700

City of Sparks

NORTH TRUCKEE DRAIN REALIGNMENT PHASE 3

HORIZONTAL CONTROL PLAN
SHEET 1

CITY OF SPARKS, NEVADA, PUBLIC WORKS DEPARTMENT

STATE OF NEVADA
PROFESSIONAL ENGINEER
NEIL LAUGHLIN
Exp. 12/31/17
CIVIL
No. 10165
5/11/16

SHEET No
HC-1
SHT OF

C:\pwworking\phx\d0351221\HC-01x.dwg 05/02/16 7:34am POXBORRO

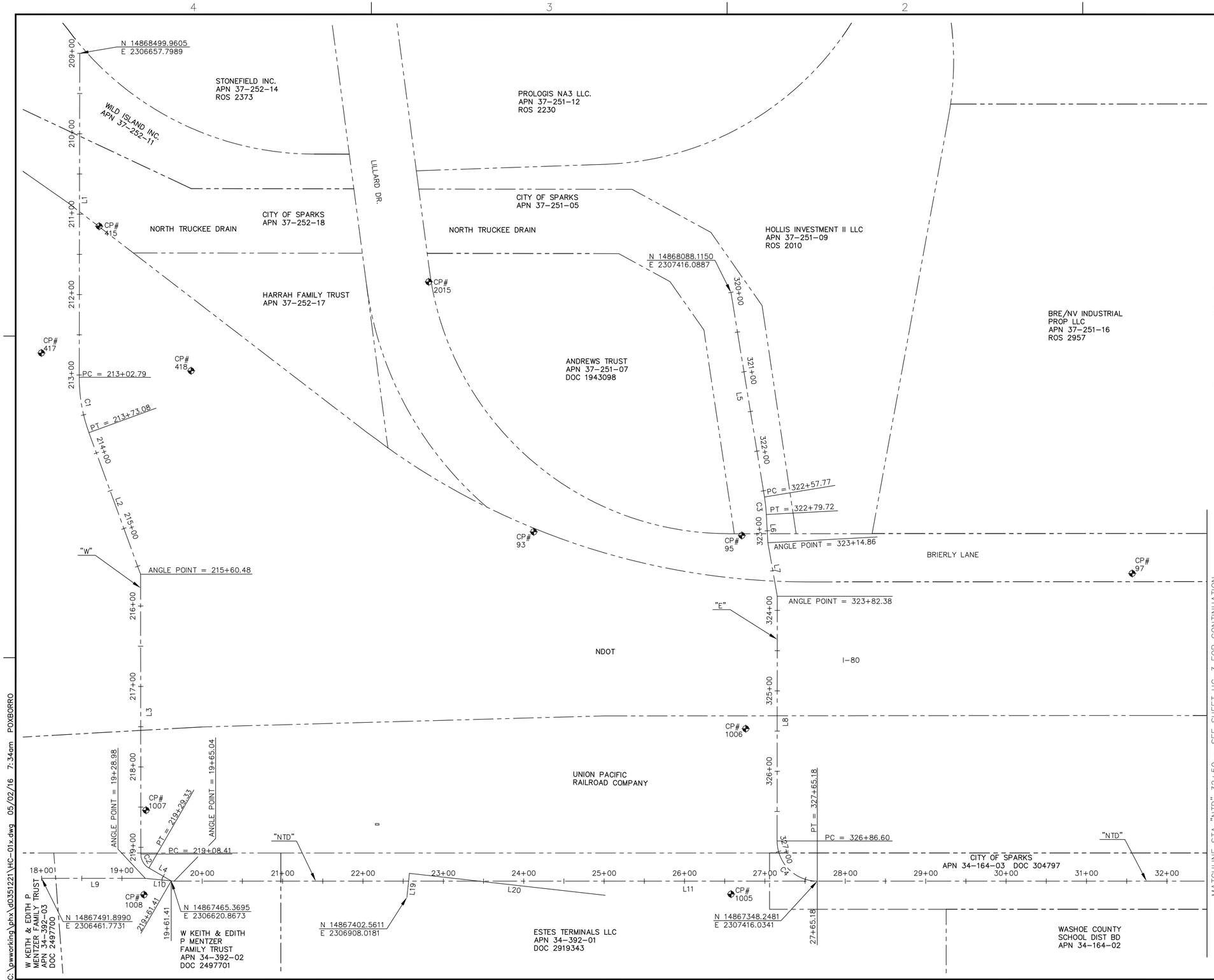

BENCHMARK AND BASIS OF BEARING

BASIS OF ELEVATIONS BEING THE CITY OF SPARKS NAVD88 VERTICAL CONTROL NETWORK BASED FROM BM#43 = ELEVATION 4395.06 FEET.

BASIS OF BEARING FOR THIS SURVEY BEING THE CITY OF SPARKS MODIFIED 83/94 NEVADA STATE COORDINATE PLANE SYSTEM WEST ZONE ALL DISTANCES AND COORDINATES SHOWN ARE GROUND VALUES TO OBTAIN GRID VALUES DIVIDE THOSE SHOWN BY THE COMBINED FACTOR OF 1.000197939

NOTE:

SEE SHEET HC-1 FOR CONTROL POINTS TABLE, LINE TABLE AND CURVE TABLE.

REV No	DATE	DESCRIPTION	APPROVED

DESIGNED BY: PEO
DRAWN BY: PEO
CHECKED BY: NL
APPROVED BY: NL
SCALE
HORIZ: 1"=60'
VERT: N/A
FIELD BOOK

HDR Engineering, Inc.
9805 Double R Blvd.
Suite 101
Reno, NV 89521
Phone: 775-337-4700

City of Sparks

NORTH TRUCKEE DRAIN REALIGNMENT PHASE 3

HORIZONTAL CONTROL PLAN
SHEET 2

CITY OF SPARKS, NEVADA, PUBLIC WORKS DEPARTMENT

STATE OF NEVADA
PROFESSIONAL ENGINEER
NICHOLAS LAUCHLIN
Exp. 12/31/17
CIVIL
No. 10169
5/11/16

SHEET No
HC-2

SHT OF

C:\pwworking\phx\d0351221\HC-01x.dwg 05/02/16 7:34am POXBORRO

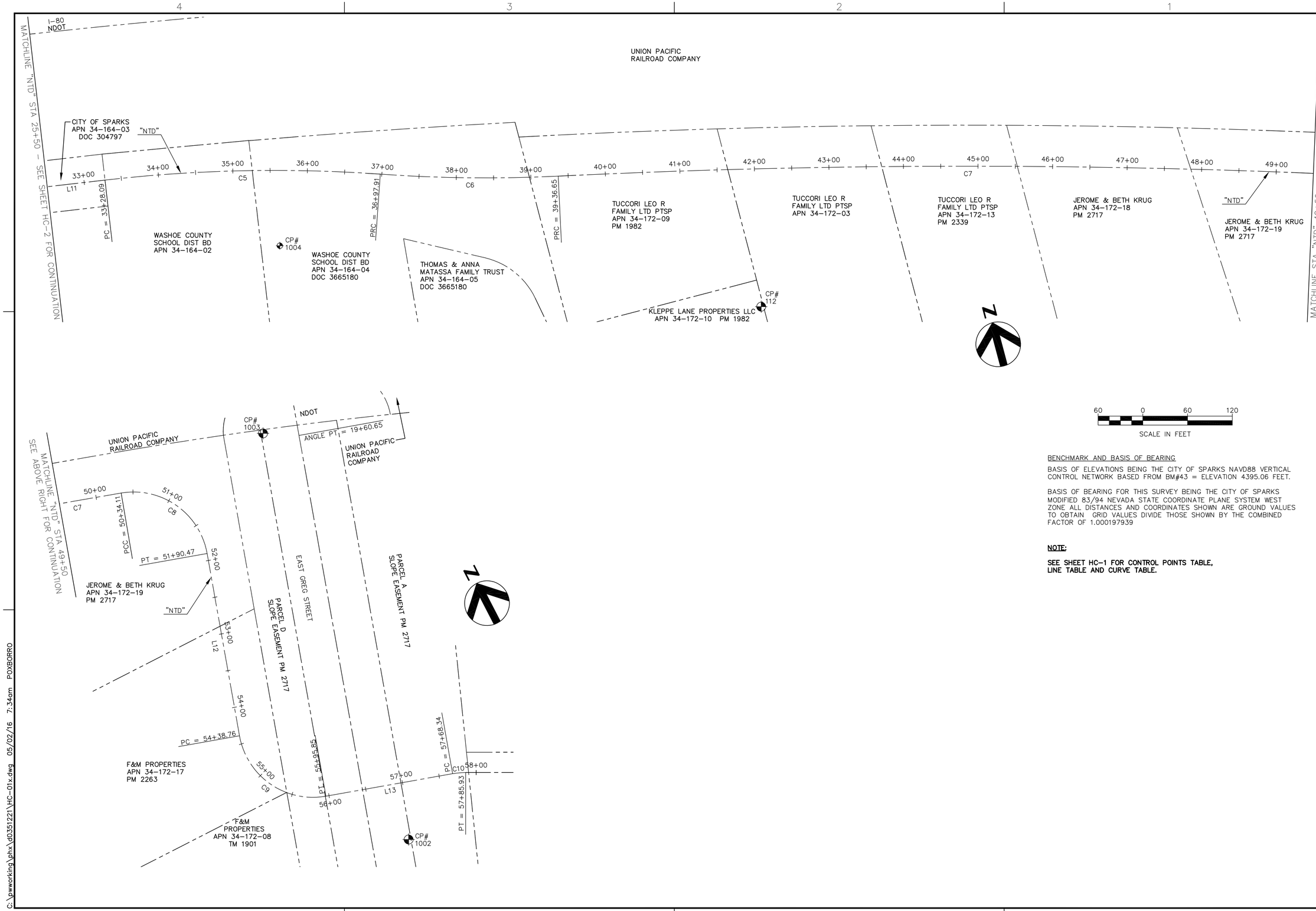

BENCHMARK AND BASIS OF BEARING

BASIS OF ELEVATIONS BEING THE CITY OF SPARKS NAVD88 VERTICAL CONTROL NETWORK BASED FROM BM#43 = ELEVATION 4395.06 FEET.

BASIS OF BEARING FOR THIS SURVEY BEING THE CITY OF SPARKS MODIFIED 83/94 NEVADA STATE COORDINATE PLANE SYSTEM WEST ZONE ALL DISTANCES AND COORDINATES SHOWN ARE GROUND VALUES TO OBTAIN GRID VALUES DIVIDE THOSE SHOWN BY THE COMBINED FACTOR OF 1.000197939

NOTE:

SEE SHEET HC-1 FOR CONTROL POINTS TABLE, LINE TABLE AND CURVE TABLE.

REV No.	DATE	DESCRIPTION	APPROVED

DESIGNED BY: PEO
DRAWN BY: PEO
CHECKED BY: NL
APPROVED BY: NL
SCALE
HORIZ: 1"=60'
VERT: N/A
FIELD BOOK

HDR Engineering, Inc.
9805 Double R Blvd.
Suite 101
Reno, NV 89521
Phone: 775-337-4700

City of Sparks

NORTH TRUCKEE DRAIN REALIGNMENT PHASE 3

HORIZONTAL CONTROL PLAN
SHEET 3

CITY OF SPARKS, NEVADA, PUBLIC WORKS DEPARTMENT

STATE OF NEVADA
PROFESSIONAL ENGINEER
NOEL P. LAUGHLIN
Exp. 12/31/17
CIVIL
No. 10165
5/11/16

SHEET No
HC-3

SHT OF

C:\pwworking\phx\d0351221\HC-01x.dwg 05/02/16 7:34am POXBORRO

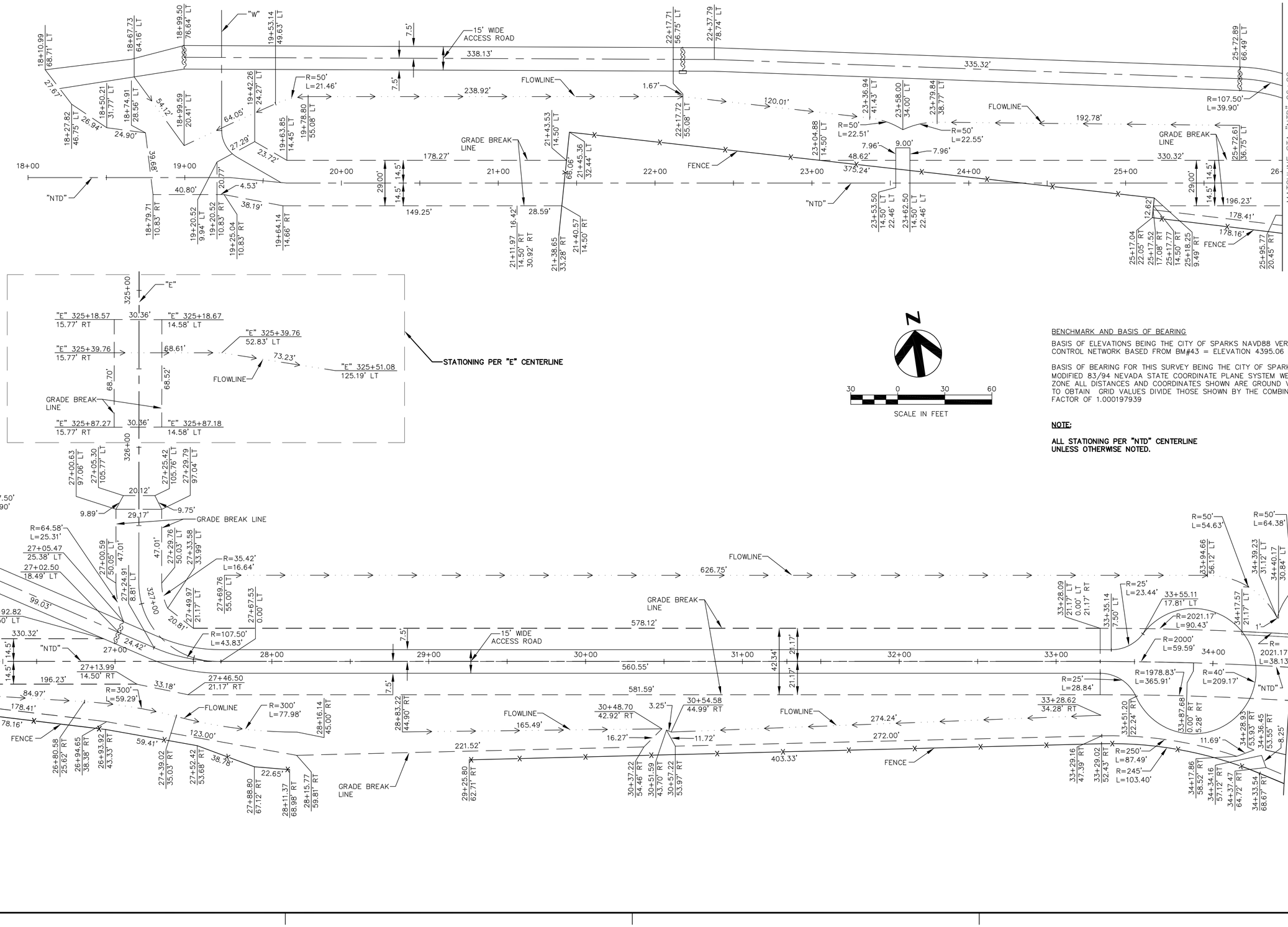

BENCHMARK AND BASIS OF BEARING

BASIS OF ELEVATIONS BEING THE CITY OF SPARKS NAVD88 VERTICAL CONTROL NETWORK BASED FROM BM#43 = ELEVATION 4395.06 FEET.

BASIS OF BEARING FOR THIS SURVEY BEING THE CITY OF SPARKS MODIFIED 83/94 NEVADA STATE COORDINATE PLANE SYSTEM WEST ZONE ALL DISTANCES AND COORDINATES SHOWN ARE GROUND VALUES TO OBTAIN GRID VALUES DIVIDE THOSE SHOWN BY THE COMBINED FACTOR OF 1.000197939

NOTE:

ALL STATIONING PER "NTD" CENTERLINE UNLESS OTHERWISE NOTED.

REV No.	DATE	DESCRIPTION	APPROVED

DESIGNED BY: PEO
DRAWN BY: PEO
CHECKED BY: NL
APPROVED BY: NL
SCALE
HORIZ: 1"=30'
VERT: N/A
FIELD BOOK

HDR Engineering, Inc.
9805 Double R Blvd.
Suite 101
Reno, NV 89521
Phone: 775-337-4700

City of Sparks

NORTH TRUCKEE DRAIN REALIGNMENT PHASE 3

HORIZONTAL CONTROL PLAN
SHEET 4

CITY OF SPARKS, NEVADA, PUBLIC WORKS DEPARTMENT

STATE OF NEVADA PROFESSIONAL ENGINEER PAUL E. OSTERLAUN LAUGHLIN Exp. 12/31/17 CIVIL No. 10165 5/11/16

SHEET No
HC-4
SHT OF

C:\pwworking\phx\d0351221\HC-01x.dwg 05/02/16 7:34am POXBORRO

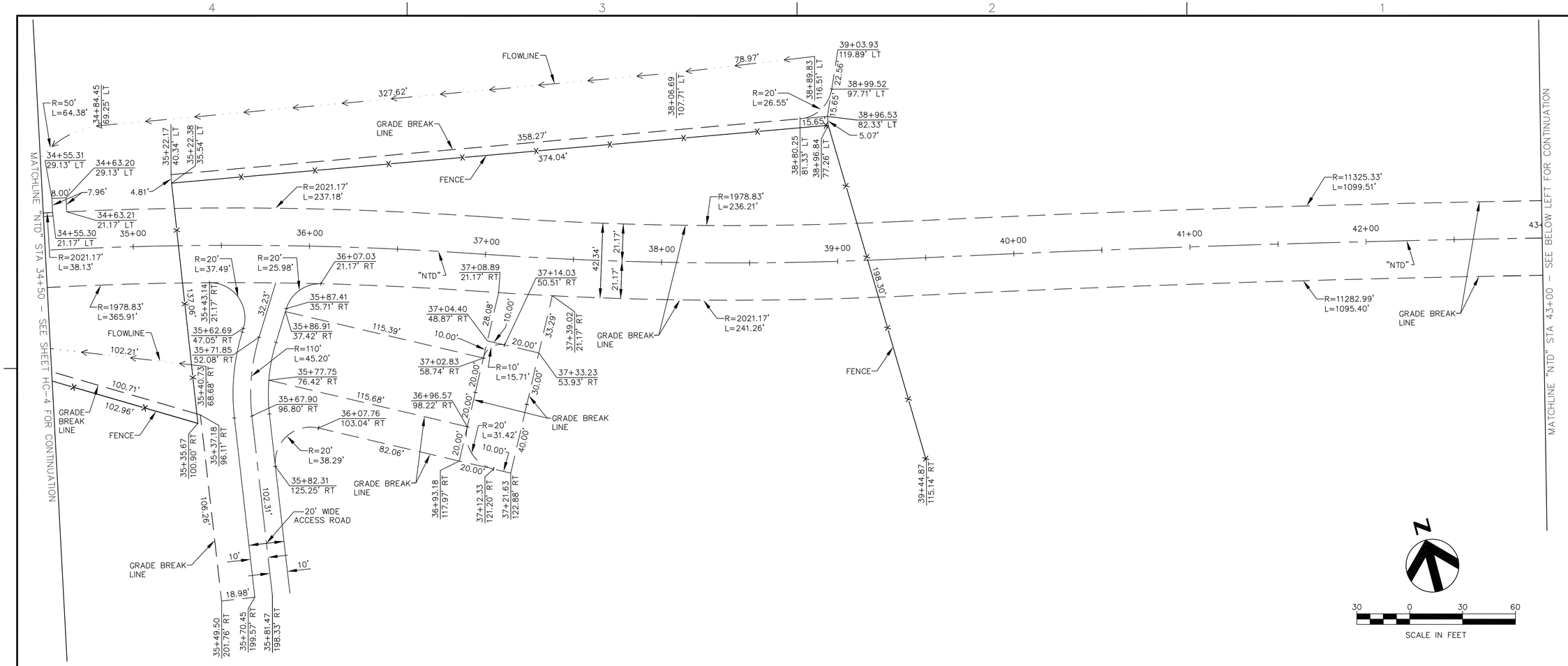

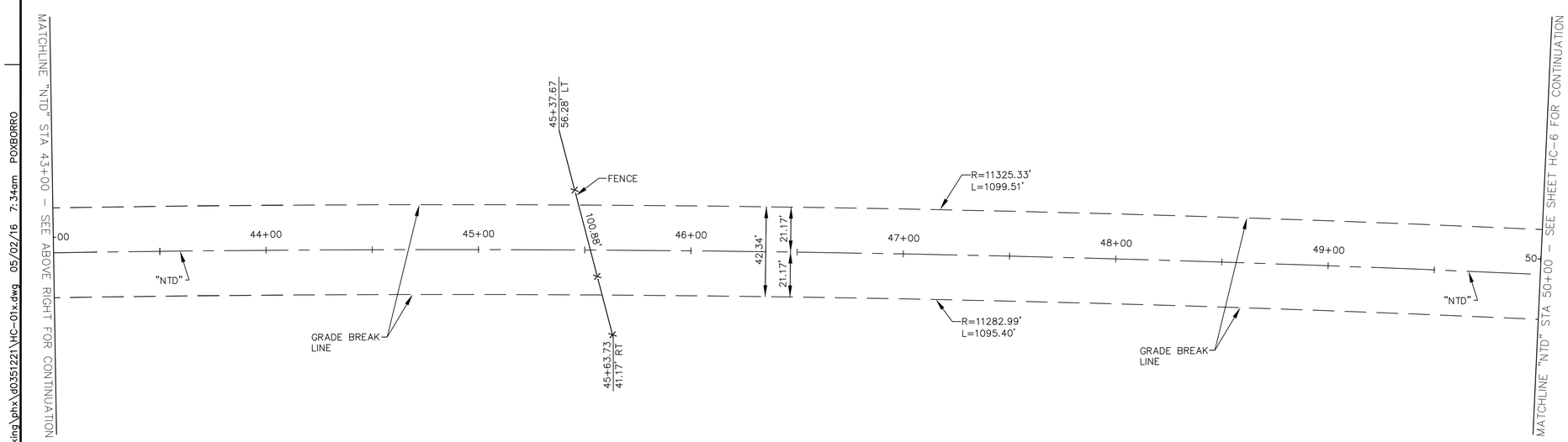

BENCHMARK AND BASIS OF BEARING

BASIS OF ELEVATIONS BEING THE CITY OF SPARKS NAVD88 VERTICAL CONTROL NETWORK BASED FROM BM#43 = ELEVATION 4395.06 FEET.

BASIS OF BEARING FOR THIS SURVEY BEING THE CITY OF SPARKS MODIFIED 83/94 NEVADA STATE COORDINATE PLANE SYSTEM WEST ZONE ALL DISTANCES AND COORDINATES SHOWN ARE GROUND VALUES TO OBTAIN GRID VALUES DIVIDE THOSE SHOWN BY THE COMBINED FACTOR OF 1.000197939

NOTE:

ALL STATIONING PER "NTD" CENTERLINE UNLESS OTHERWISE NOTED.

REV No.	DATE	DESCRIPTION	APPROVED

DESIGNED BY: PEO
DRAWN BY: PEO
CHECKED BY: NL
APPROVED BY: NL
SCALE
HORIZ: 1"=30'
VERT: N/A
FIELD BOOK

HDR Engineering, Inc.
9805 Double R Blvd.
Suite 101
Reno, NV 89521
Phone: 775-337-4700

City of Sparks

NORTH TRUCKEE DRAIN REALIGNMENT PHASE 3

HORIZONTAL CONTROL PLAN
SHEET 5

CITY OF SPARKS, NEVADA, PUBLIC WORKS DEPARTMENT

STATE OF NEVADA PROFESSIONAL ENGINEER LAUCHLIN Exp. 12/31/17 CIVIL No. 10169 5/11/16

SHEET No
HC-5
SHT OF

C:\pwworking\phx\d0351221\HC-01x.dwg 05/02/16 7:34am POXBORRO

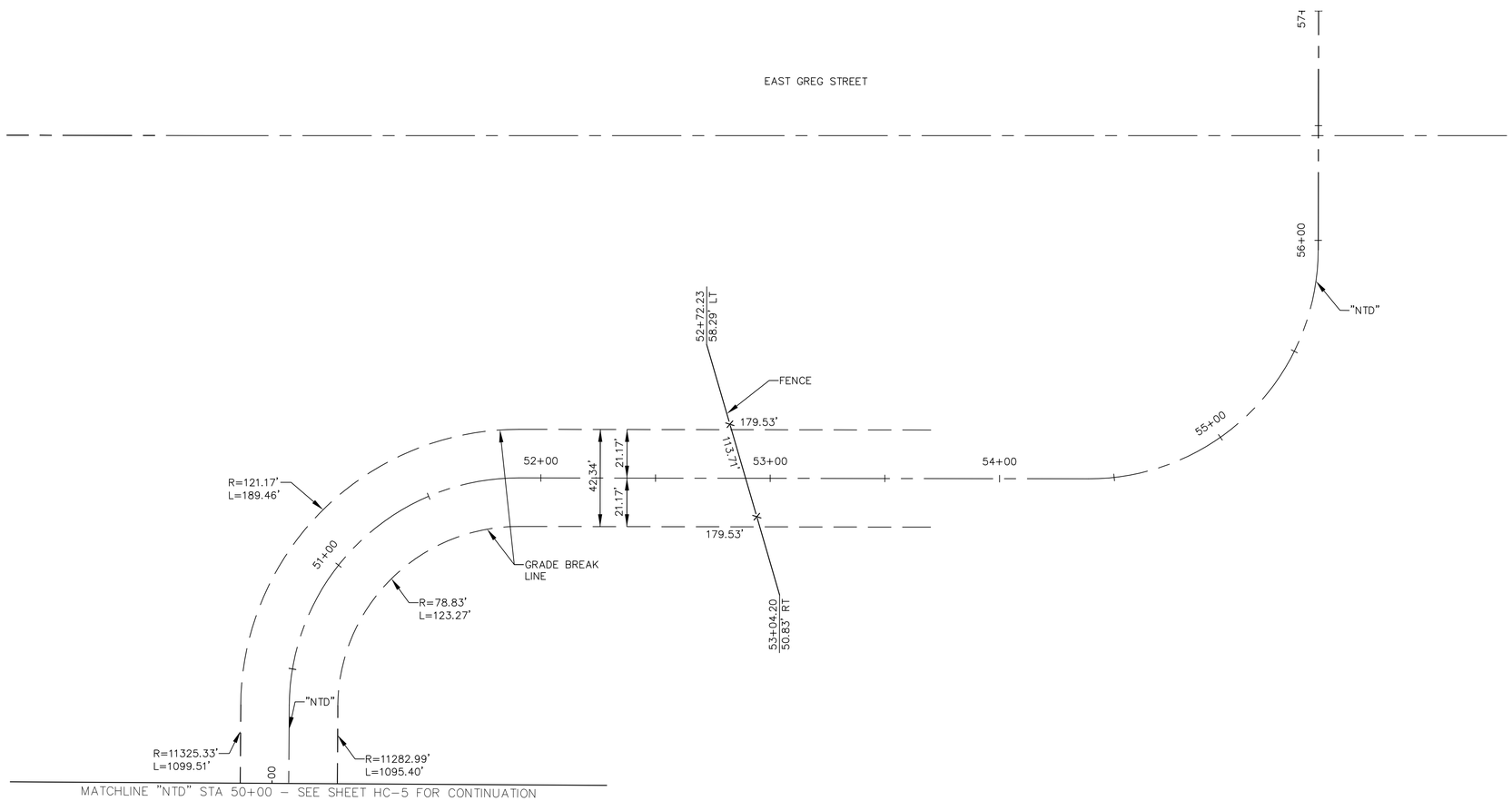

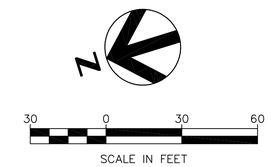

BENCHMARK AND BASIS OF BEARING

BASIS OF ELEVATIONS BEING THE CITY OF SPARKS NAVD88 VERTICAL CONTROL NETWORK BASED FROM BM#43 = ELEVATION 4395.06 FEET.

BASIS OF BEARING FOR THIS SURVEY BEING THE CITY OF SPARKS MODIFIED 83/94 NEVADA STATE COORDINATE PLANE SYSTEM WEST ZONE ALL DISTANCES AND COORDINATES SHOWN ARE GROUND VALUES TO OBTAIN GRID VALUES DIVIDE THOSE SHOWN BY THE COMBINED FACTOR OF 1.000197939

NOTE:

ALL STATIONING PER "NTD" CENTERLINE UNLESS OTHERWISE NOTED.

REV No	DATE	DESCRIPTION	APPROVED

DESIGNED BY: PEO
DRAWN BY: PEO
CHECKED BY: NL
APPROVED BY: NL
SCALE
HORIZ: 1"=30'
VERT: N/A
FIELD BOOK

HDR Engineering, Inc.
9805 Double R Blvd.
Suite 101
Reno, NV 89521
Phone: 775-337-4700

City of Sparks

NORTH TRUCKEE DRAIN REALIGNMENT PHASE 3

HORIZONTAL CONTROL PLAN
SHEET 6

CITY OF SPARKS, NEVADA, PUBLIC WORKS DEPARTMENT

STATE OF NEVADA
PROFESSIONAL ENGINEER
NOEL N. LAUCHLIN
Exp. 12/31/17
CIVIL
No. 10169
5/11/16

SHEET No
HC-6

SHT OF

C:\pwworking\phx\d0351221\HC-01x.dwg 05/02/16 7:34am POXBORRO

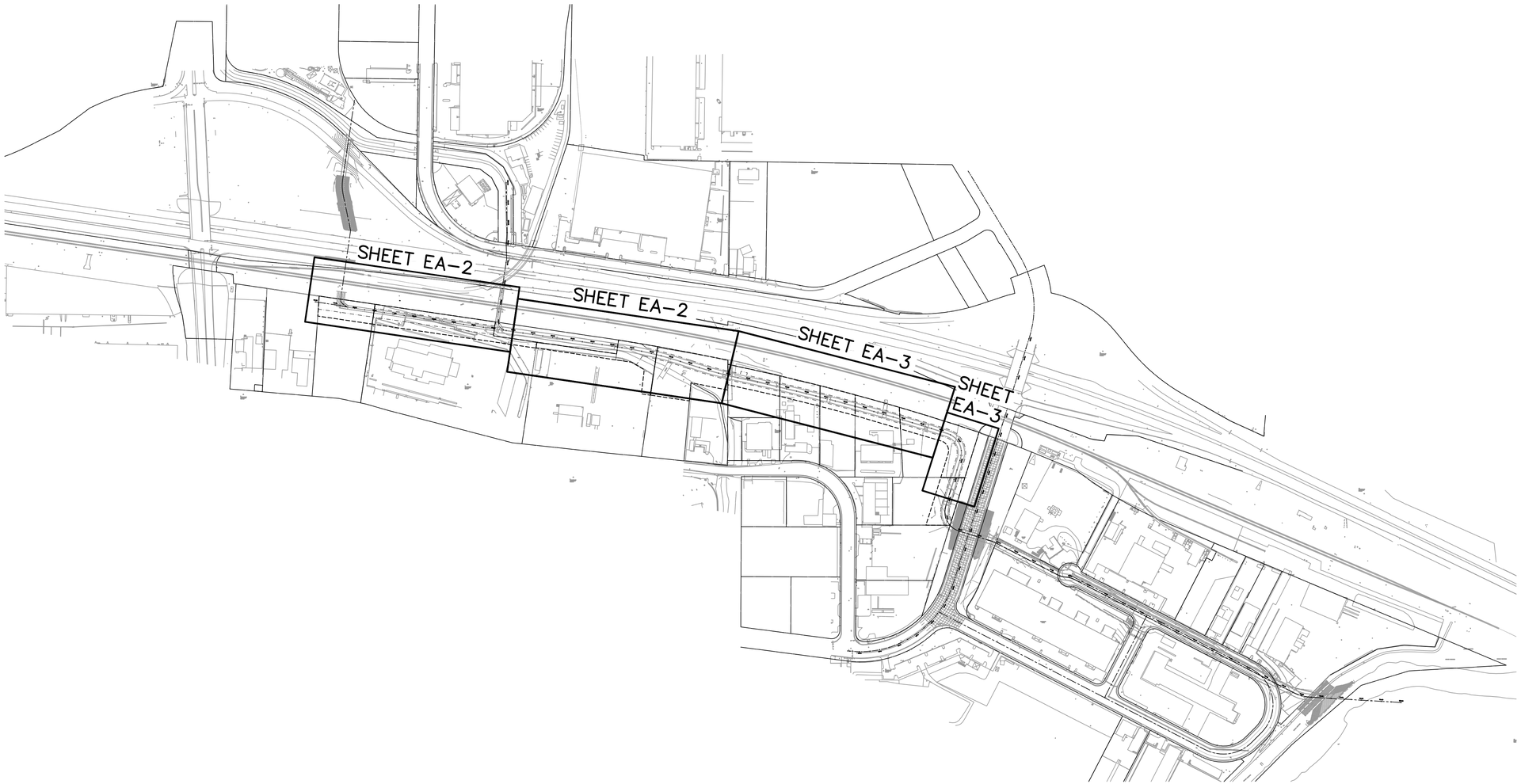

Key Map

NTS

NOTE
EASEMENTS AND DIMENSIONS SHOWN ARE APPROXIMATE. SEE LEGALS COMPLETED BY BIGBY & ASSOC. FILED BY CITY OF SPARKS. FOR EXACT DISTANCES AND LOCATIONS.

REV No.	DATE	DESCRIPTION	APPROVED

DESIGNED BY: PEO
DRAWN BY: PEO
CHECKED BY: NL
APPROVED BY: NL
SCALE
HORIZ: 1"=40'
VERT: N/A
FIELD BOOK

HDR
HDR Engineering, Inc.
9805 Double R Blvd.
Suite 101
Reno, NV 89521
Phone: 775-337-4700

City of Sparks

NORTH TRUCKEE DRAIN REALIGNMENT PHASE 3

EASEMENT KEY MAP

CITY OF SPARKS, NEVADA, PUBLIC WORKS DEPARTMENT

STATE OF NEVADA
PROFESSIONAL ENGINEER
No. 10165
NOEL LAUGHLIN
Exp. 12/31/17
CIVIL
5/11/16

SHEET No
EA-1

SHT OF

C:\pwworking\phx\d0351221\EA-01x.dwg 05/02/16 7:15am POXBORRO

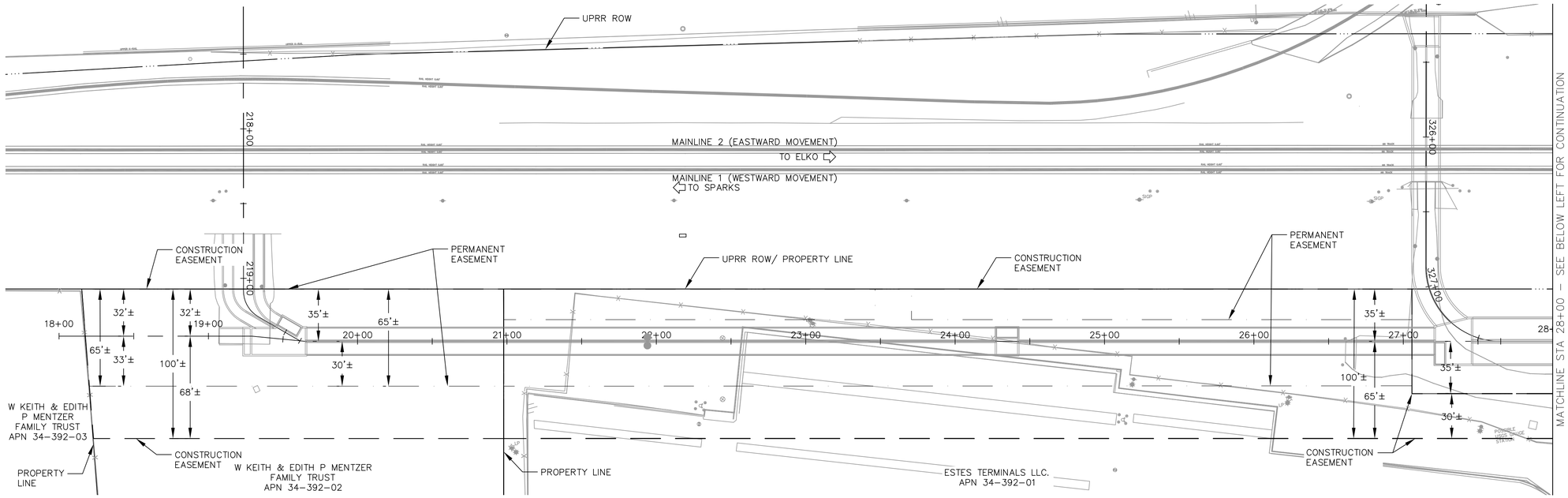

40 0 40 80

SCALE IN FEET

NOTE
EASEMENTS AND DIMENSIONS SHOWN ARE APPROXIMATE. SEE LEGALS COMPLETED BY BIGBY & ASSOC. FILED BY CITY OF SPARKS. FOR EXACT DISTANCES AND LOCATIONS.

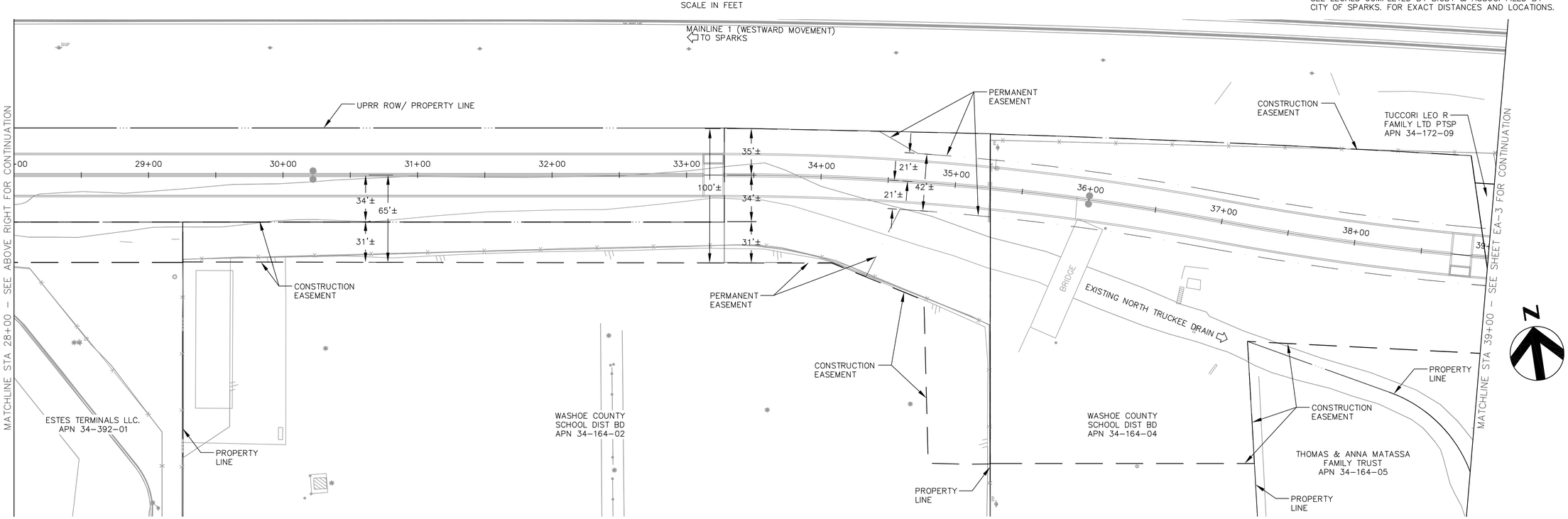

REV No.	DATE	DESCRIPTION	APPROVED

DESIGNED BY: PEO
DRAWN BY: PEO
CHECKED BY: NL
APPROVED BY: NL
SCALE
HORIZ: 1"=40'
VERT: N/A
FIELD BOOK

HDR Engineering, Inc.
9805 Double R Blvd.
Suite 101
Reno, NV 89521
Phone: 775-337-4700

City of Sparks

NORTH TRUCKEE DRAIN REALIGNMENT PHASE 3

EASEMENT PLAN
'NTD' STA 18+00 TO STA 39+00

CITY OF SPARKS, NEVADA, PUBLIC WORKS DEPARTMENT

STATE OF NEVADA
NICHOLAS LAUCHLIN
Exp. 12/31/17
CIVIL
PROFESSIONAL ENGINEER No. 10169
5/11/16

SHEET No
EA-2

SHT OF

C:\pwworking\phx\d0351221\EA-01x.dwg 05/02/16 7:15am POXBORRO

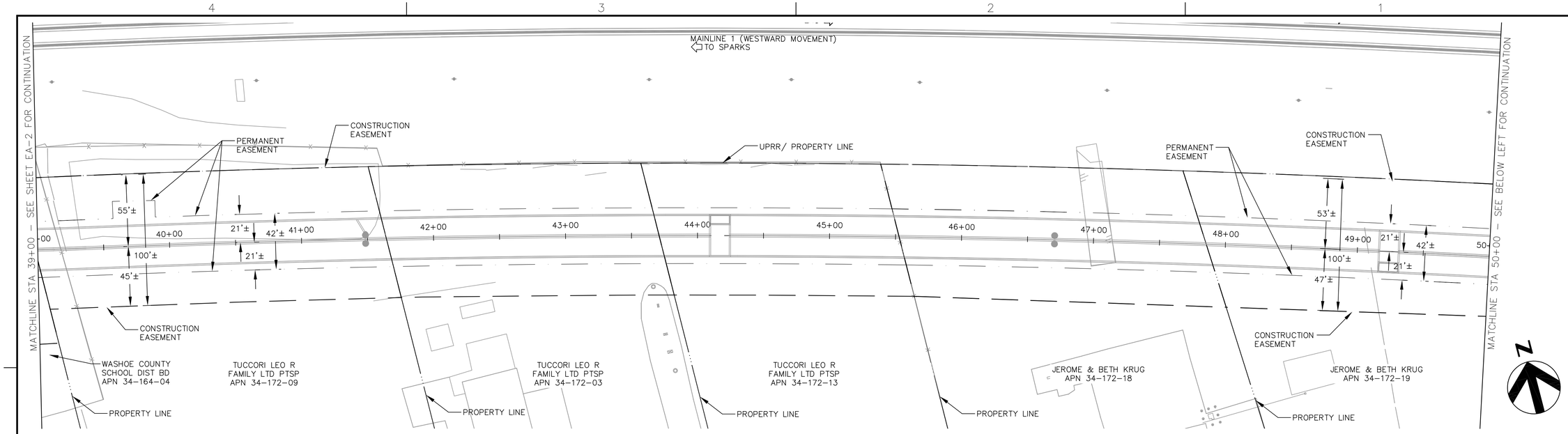

40 0 40 80
SCALE IN FEET

NOTE
EASEMENTS AND DIMENSIONS SHOWN ARE APPROXIMATE. SEE LEGALS COMPLETED BY BIGBY & ASSOC. FILED BY CITY OF SPARKS. FOR EXACT DISTANCES AND LOCATIONS.

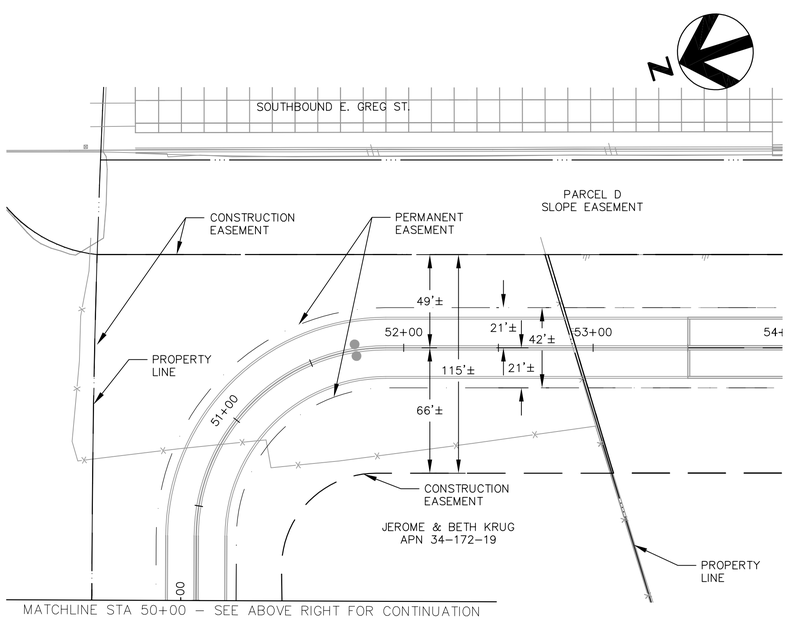

REV No.	DATE	DESCRIPTION	APPROVED

DESIGNED BY: PEO
DRAWN BY: PEO
CHECKED BY: NL
APPROVED BY: NL
SCALE
HORIZ: 1"=40'
VERT: N/A
FIELD BOOK

HDR Engineering, Inc.
9805 Double R Blvd.
Suite 101
Reno, NV 89521
Phone: 775-337-4700

City of Sparks

NORTH TRUCKEE DRAIN REALIGNMENT PHASE 3

EASEMENT PLAN 'NTD' STA 39+00 TO STA 54+00

CITY OF SPARKS, NEVADA, PUBLIC WORKS DEPARTMENT

STATE OF NEVADA
PROFESSIONAL ENGINEER
NIGEL LAUGHLIN
Exp. 12/31/17
CIVIL
No. 10165
5/11/16

SHEET No
EA-3
SHT OF

C:\pwworking\phx\d0351221\EA-01x.dwg 05/02/16 7:15am POXBORRO

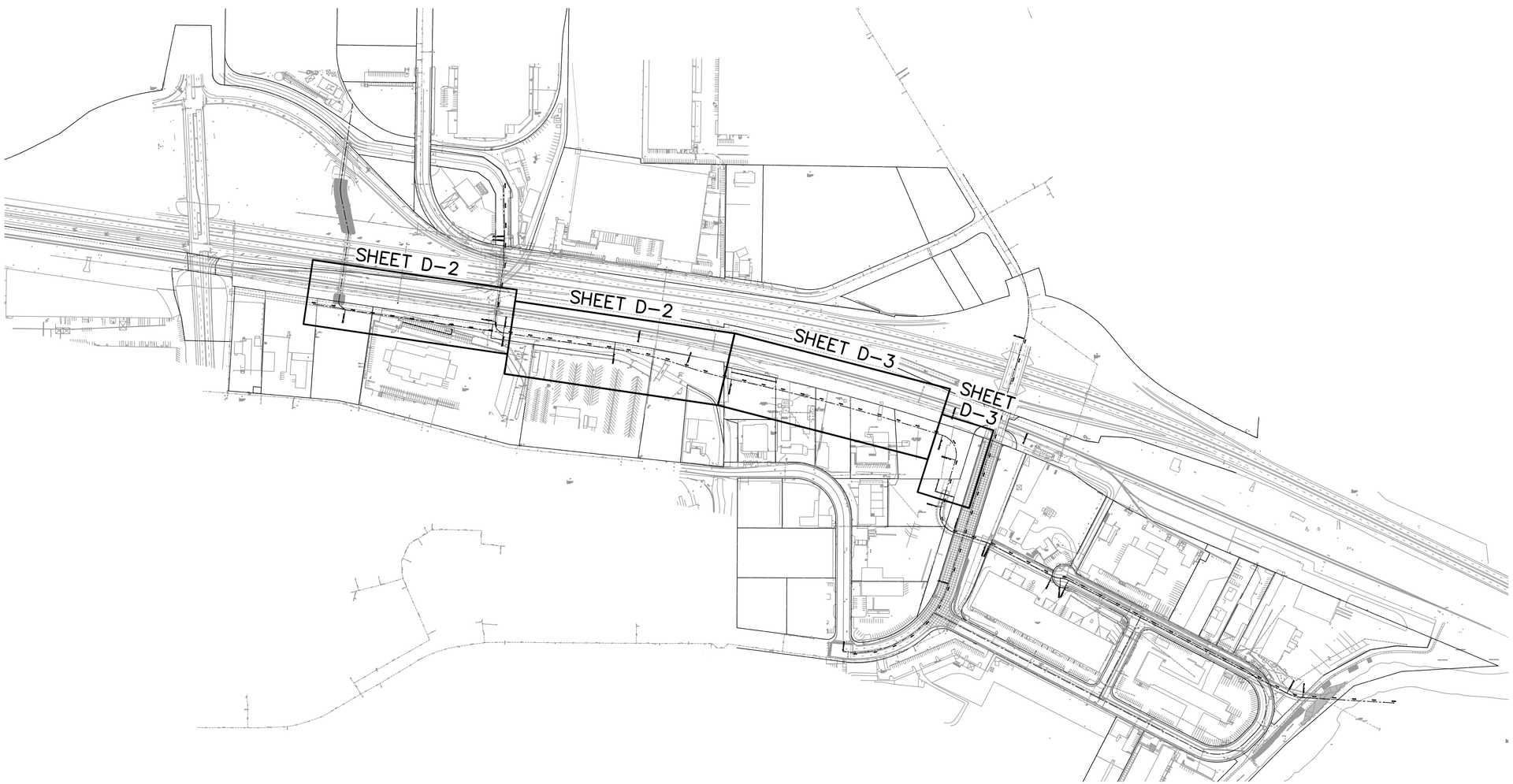

Key Map

NTS

DISCLAIMER NOTE

UTILITY LOCATIONS SHOWN HEREON ARE APPROXIMATE ONLY. IT SHALL BE THE CONTRACTOR'S RESPONSIBILITY TO DETERMINE THE EXACT HORIZONTAL AND VERTICAL LOCATION OF ALL EXISTING UNDERGROUND AND OVERHEAD UTILITIES PRIOR TO COMMENCING CONSTRUCTION. NO REPRESENTATION IS MADE THAT ALL EXISTING UTILITIES ARE SHOWN HEREON. THE ENGINEER ASSUMES NO RESPONSIBILITY FOR UTILITIES NOT SHOWN OR UTILITIES NOT SHOWN IN THEIR PROPER LOCATION.

Avoid cutting underground utility lines. It's costly.
Call before you Dig.
1-800-227-2600
UNDERGROUND SERVICE ALERT (USA)

SAFETY ALERT
Call before you Overhead
775-834-7590
NV Energy Construction Line
24hrs. Prior Notice Required
OVERHEAD SERVICE ALERT

REV No	DATE	DESCRIPTION	APPROVED

DESIGNED BY: PEO
DRAWN BY: PEO
CHECKED BY: NL
APPROVED BY: NL
SCALE
HORIZ: 1"=40'
VERT: N/A
FIELD BOOK

HDR Engineering, Inc.
9805 Double R Blvd.
Suite 101
Reno, NV 89521
Phone: 775-337-4700

City of Sparks

NORTH TRUCKEE DRAIN REALIGNMENT PHASE 3

DEMOLITION KEY MAP

CITY OF SPARKS, NEVADA, PUBLIC WORKS DEPARTMENT

STATE OF NEVADA
PROFESSIONAL ENGINEER
No. 10165
LAUGHLIN
Exp. 12/31/17
CIVIL
5/11/16

SHEET No
D-1

SHT OF

C:\pwworking\phx\d0351221\D-01x.dwg 05/02/16 6:58am POXBORRO

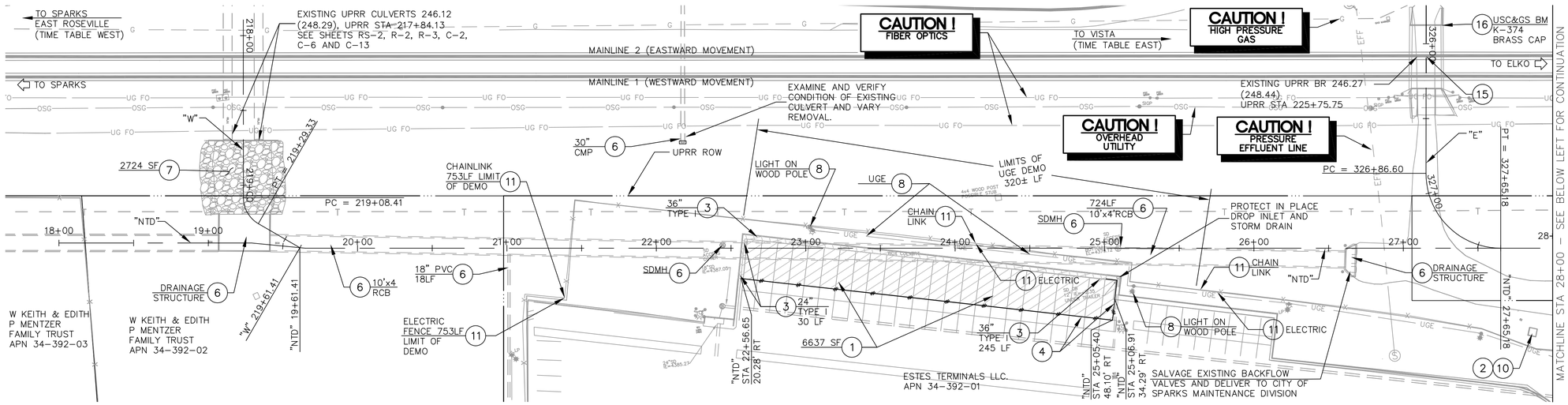

REMOVAL NOTES:

1. REMOVE PLANTMIX BITUMINOUS SURFACE.
2. REMOVE CONCRETE.
3. REMOVE P.C.C. CURB AND GUTTER.
4. SAWCUT PLANTMIX BITUMINOUS SURFACE.
5. REMOVE CONCRETE HEADWALL.
6. REMOVE STORM DRAIN, SIZE AND TYPE SHOWN ON PLANS.
7. REMOVE RIPRAP
8. REMOVE AND RELOCATE UTILITY, SIZE AND TYPE SHOWN ON PLANS. SEE UTILITY PLANS FOR RELOCATION.
9. REMOVE CONCRETE PLUG.
10. USGS GAUGE STATION TO BE REMOVED BY USGS PRIOR TO CONSTRUCTION. SEE NOTE NO. 22 OF THE GENERAL NOTES, SHEET G-3.
11. REMOVE AND REPLACE FENCE AS SHOWN. TYPE SHOWN ON PLANS.
12. REMOVE BRIDGE AND ALL ASSOCIATED STRUCTURES (INCLUDING SUBSTRUCTURES), TYPE SHOWN ON PLANS.
13. UTILITY TO BE RELOCATED BY OTHERS PER "U" SHEETS.
14. ABANDON IN PLACE.
15. REMOVE BRIDGE SPAN AND BACKWALL PER SHEETS R4 THRU R10, RS-6
16. REMOVE AND REPLACE SURVEY MONUMENT. SEE NOTE NO. 23 OF THE GENERAL NOTES, SHEET G-3.

THIS IS A GENERAL LIST. NOT ALL ACTIVITIES ARE USED.

NOTE:
PROTECT EXISTING FEATURES IN PLACE UNLESS NOTED OTHERWISE.

SEE SHEET C-13 AND C-14 FOR UPRR ROW INFORMATION

40 0 40 80
SCALE IN FEET

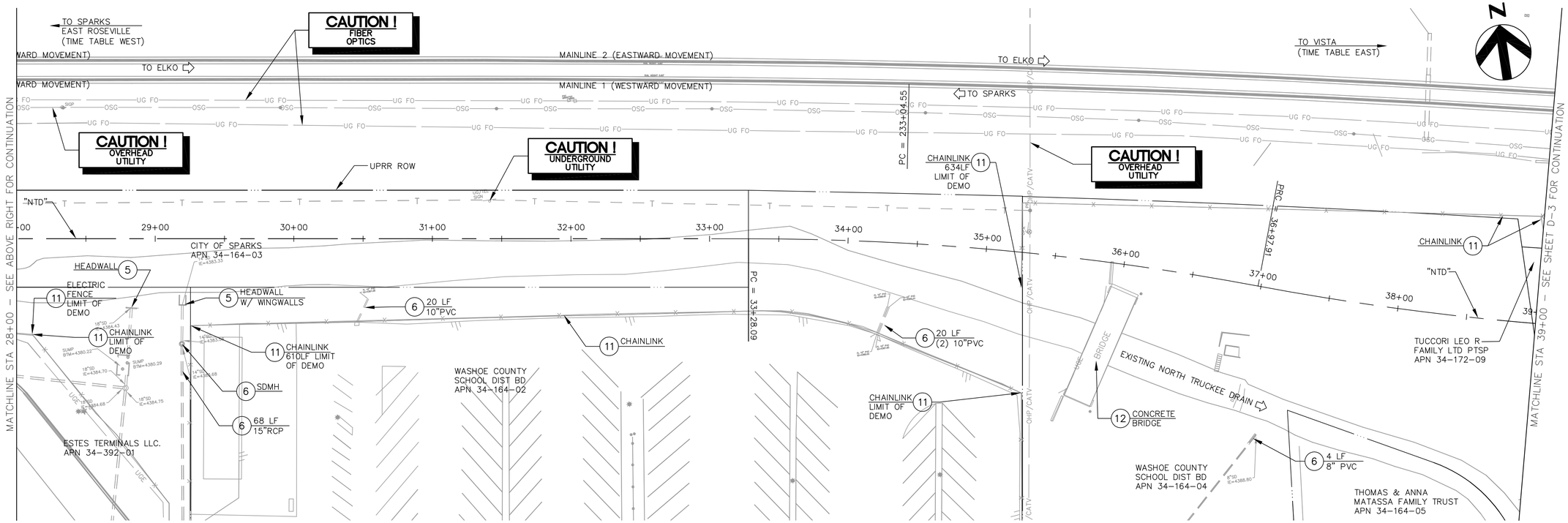

REV No.	DATE	DESCRIPTION	APPROVED

DESIGNED BY: PEO
DRAWN BY: PEO
CHECKED BY: NL
APPROVED BY: NL
SCALE
HORIZ: 1"=40'
VERT: N/A
FIELD BOOK

HDR Engineering, Inc.
9805 Double R Blvd.
Suite 101
Reno, NV 89521
Phone: 775-337-4700

City of Sparks

NORTH TRUCKEE DRAIN REALIGNMENT PHASE 3

DEMOLITION PLAN
'NTD' STA 18+00 TO STA 39+00

CITY OF SPARKS, NEVADA, PUBLIC WORKS DEPARTMENT

STATE OF NEVADA
PAUL E. LAUCHUN
Exp. 12/31/17
CIVIL
No. 10169
PROFESSIONAL ENGINEER
6/11/16

SHEET No
D-2

SHT OF

C:\pwworking\phx\d0351221\D-01x.dwg 05/02/16 6:59am POXBORRO

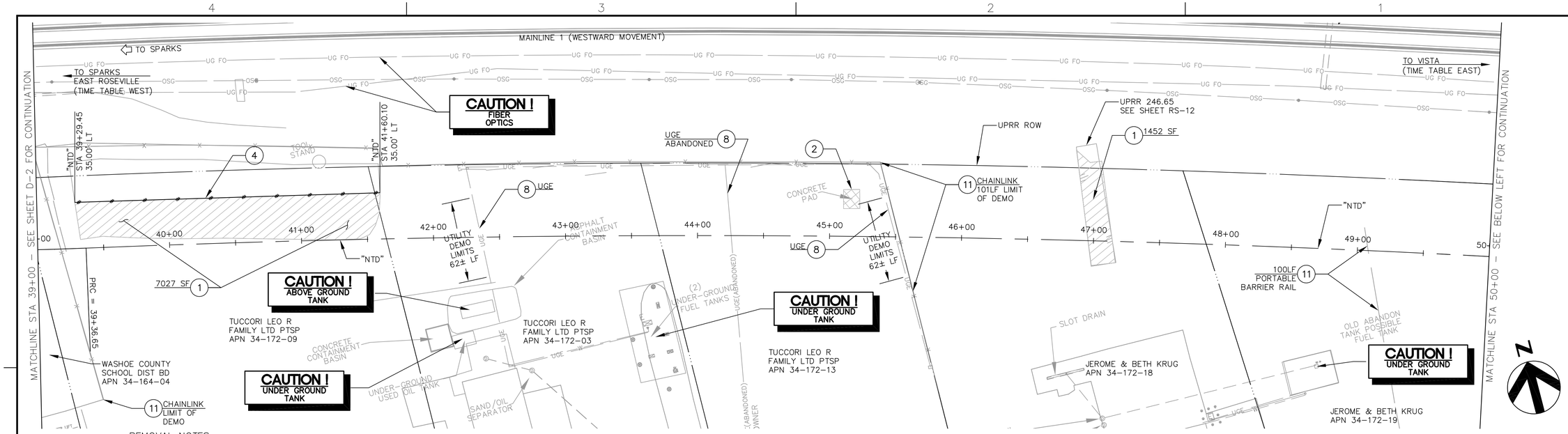

REMOVAL NOTES:

1. REMOVE PLANTMIX BITUMINOUS SURFACE.
2. REMOVE CONCRETE.
3. REMOVE P.C.C. CURB AND GUTTER.
4. SAWCUT PLANTMIX BITUMINOUS SURFACE.
5. REMOVE CONCRETE HEADWALL.
6. REMOVE STORM DRAIN, SIZE AND TYPE SHOWN ON PLANS.
7. REMOVE RIPRAP
8. REMOVE AND RELOCATE UTILITY, SIZE AND TYPE SHOWN ON PLANS. SEE UTILITY PLANS FOR RELOCATION.
9. REMOVE CONCRETE PLUG.
10. USGS GAUGE STATION TO BE REMOVED BY USGS PRIOR TO CONSTRUCTION. SEE NOTE NO. 22 OF THE GENERAL NOTES, SHEET G-3.
11. REMOVE AND REPLACE FENCE AS SHOWN. TYPE SHOWN ON PLANS.
12. REMOVE BRIDGE AND ALL ASSOCIATED STRUCTURES (INCLUDING SUBSTRUCTURES), TYPE SHOWN ON PLANS.
13. UTILITY TO BE RELOCATED BY OTHERS PER "U" SHEETS.
14. ABANDON IN PLACE.
15. REMOVE BRIDGE SPAN AND BACKWALL PER SHEETS R4 THRU R10, RS-6
16. REMOVE AND REPLACE SURVEY MONUMENT. SEE NOTE NO. 23 OF THE GENERAL NOTES, SHEET G-3.

THIS IS A GENERAL LIST. NOT ALL ACTIVITIES ARE USED.

NOTE:
PROTECT EXISTING FEATURES IN PLACE UNLESS NOTED OTHERWISE.

SEE SHEET C-15 AND C-16 FOR UPRR ROW INFORMATION

40 0 40 80
SCALE IN FEET

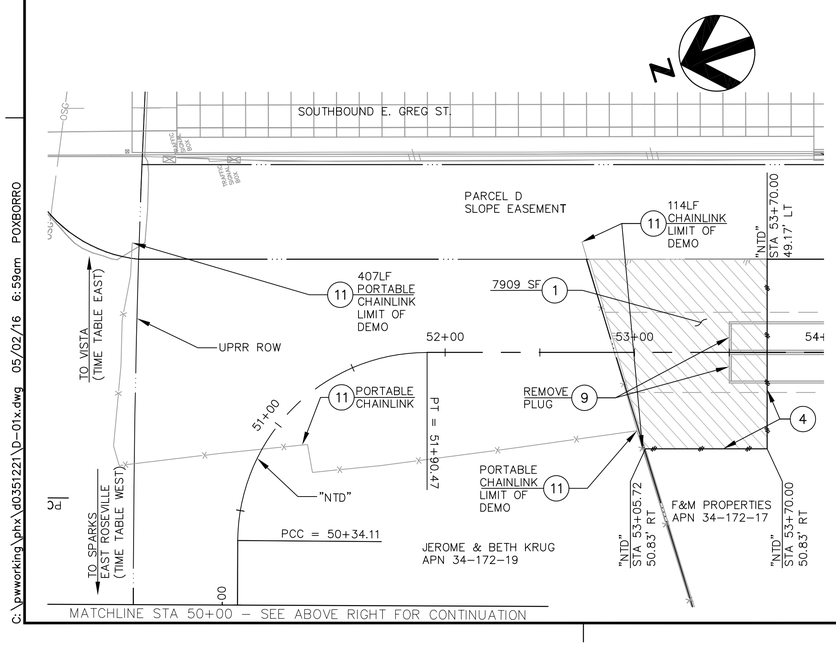

REV No.	DATE	DESCRIPTION	APPROVED

DESIGNED BY: PEO
DRAWN BY: PEO
CHECKED BY: NL
APPROVED BY: NL
SCALE
HORIZ: 1"=40'
VERT: N/A
FIELD BOOK

HDR Engineering, Inc.
9805 Double R Blvd.
Suite 101
Reno, NV 89521
Phone: 775-337-4700

City of Sparks

NORTH TRUCKEE DRAIN REALIGNMENT PHASE 3

DEMOLITION PLAN "NTD" STA 39+00 TO STA 54+00

CITY OF SPARKS, NEVADA, PUBLIC WORKS DEPARTMENT

STATE OF NEVADA
PROFESSIONAL ENGINEER
NICOLE L. LAUGHLIN
Exp. 12/31/17
CIVIL
No. 10165
5/11/16

SHEET No
D-3

SHT OF

C:\pwworking\phx\d0351221\D-01x.dwg 05/02/16 6:59am POXBORRO

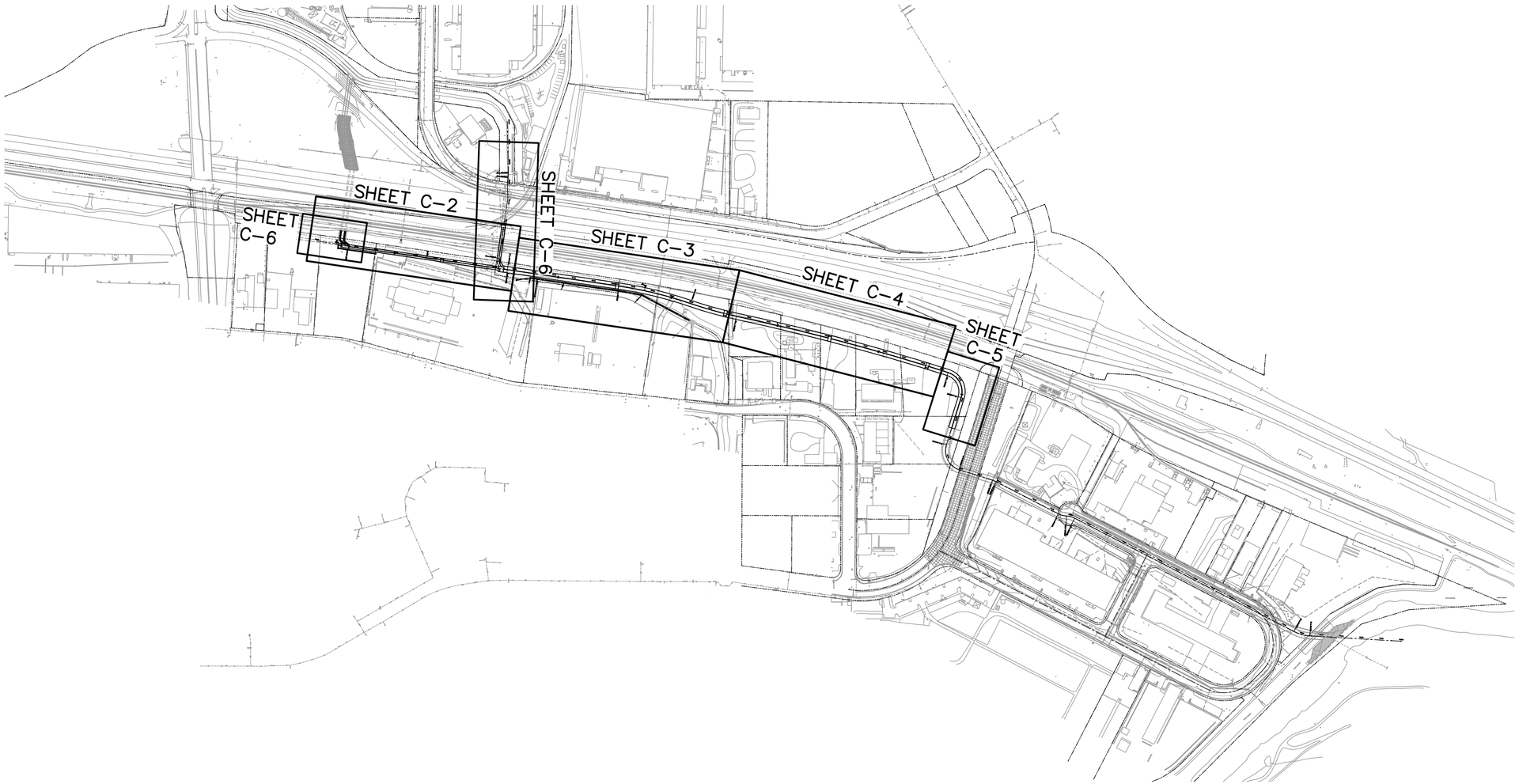

Key Map

NTS

DISCLAIMER NOTE

UTILITY LOCATIONS SHOWN HEREON ARE APPROXIMATE ONLY. IT SHALL BE THE CONTRACTOR'S RESPONSIBILITY TO DETERMINE THE EXACT HORIZONTAL AND VERTICAL LOCATION OF ALL EXISTING UNDERGROUND AND OVERHEAD UTILITIES PRIOR TO COMMENCING CONSTRUCTION. NO REPRESENTATION IS MADE THAT ALL EXISTING UTILITIES ARE SHOWN HEREON. THE ENGINEER ASSUMES NO RESPONSIBILITY FOR UTILITIES NOT SHOWN OR UTILITIES NOT SHOWN IN THEIR PROPER LOCATION.

Avoid cutting underground utility lines. It's costly.
Call before you Dig.
1-800-227-2600
UNDERGROUND SERVICE ALERT (USA)

SAFETY ALERT
Call before you Overhead
775-834-7590
NV Energy Construction Line
24hrs. Prior Notice Required
OVERHEAD SERVICE ALERT

REV No	DATE	DESCRIPTION	APPROVED

DESIGNED BY: PEO
DRAWN BY: PEO
CHECKED BY: NL
APPROVED BY: NL
SCALE
HORIZ: N/A
VERT: N/A
FIELD BOOK

HDR
HDR Engineering, Inc.
9805 Double R Blvd.
Suite 101
Reno, NV 89521
Phone: 775-337-4700

City of Sparks

NORTH TRUCKEE DRAIN REALIGNMENT PHASE 3

RCB PLAN AND PROFILE KEY MAP

CITY OF SPARKS, NEVADA, PUBLIC WORKS DEPARTMENT

PROFESSIONAL ENGINEER STATE OF NEVADA
NOEL LAUGHLIN
Exp. 12/31/17
CIVIL
No. 10165
5/11/16

SHEET No
C-1

SHT OF

C:\pwworking\phx\d0351221\C-01x.dwg 05/02/16 6:33am POXBORRO

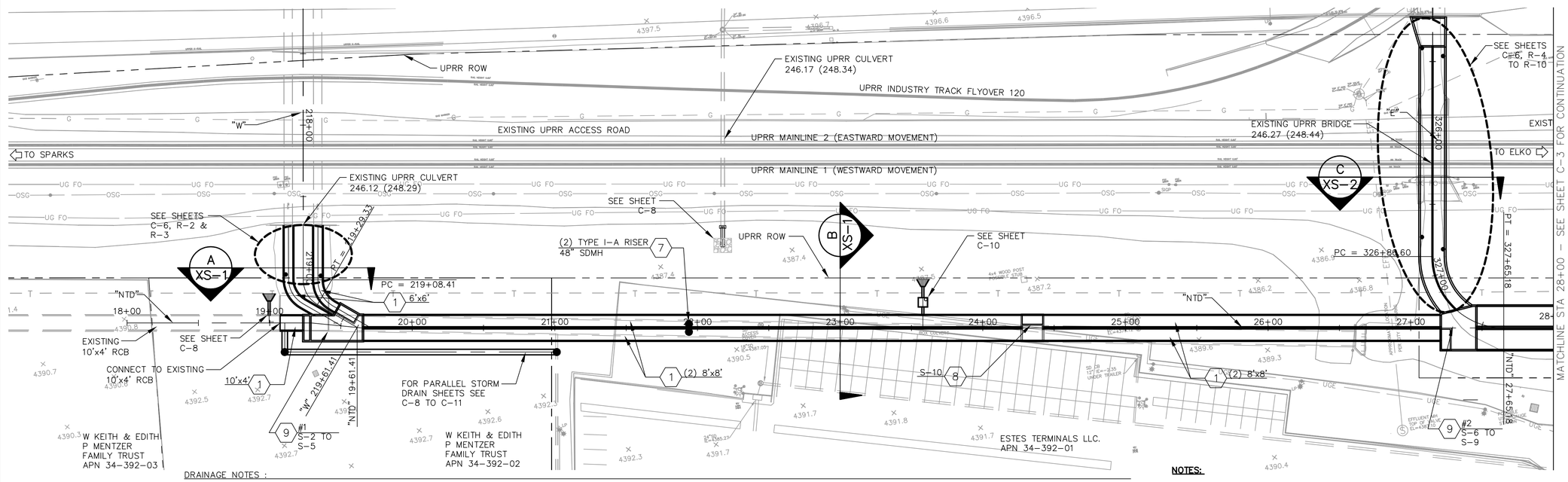

DRAINAGE NOTES :

1. INSTALL STORM DRAIN RCB, SIZE AS SHOWN ON PLAN PER DETAIL SEE SHEET DT-4
2. CONSTRUCT DRAINAGE VAULT, PER SHEET SHOWN ON PLAN.
3. INSTALL RIPRAP PER DETAIL SEE SHEET DT-5. SIZE AND THICKNESS AS SHOWN ON PLAN.
4. INSTALL STORM DRAIN PIPE, SIZE AND TYPE AS SHOWN ON PLAN.
5. CONSTRUCT SUMP STRUCTURE PER DETAIL SEE SHEETS DT-3 AND S-19.
6. NOT USED
7. CONSTRUCT MANHOLE, SIZE AND TYPE AS SHOWN ON PLAN.
8. CONSTRUCT MAINTENANCE ACCESS VAULT PER "S" SHEETS AS NOTED.
9. CONSTRUCT TRANSITION STRUCTURE, PER "S" SHEETS AS NOTED.
10. CONSTRUCT DROP INLET, SIZE AND TYPE AS SHOWN ON PLAN.
11. CONSTRUCT UPRR RATED STORM DRAIN RCB, SIZE AS SHOWN ON PLAN PER "R" AND "S" SHEETS AS NOTED.
12. CONSTRUCT TRANSITION STRUCTURE, PER "S" SHEETS AS NOTED.
13. CONSTRUCT TRASH RACK, PER DETAIL SEE SHEET DT-3

THIS IS A GENERAL LIST. NOT ALL ACTIVITIES ARE USED.

NOTES:

1. **PROTECT EXISTING FEATURES IN PLACE UNLESS NOTED OTHERWISE.**
2. **SEE SHEETS C-8 TO C-11 FOR PARALLEL AND LATERAL STORM DRAINS.**
3. **SEE SHEETS C-13 TO C-16 FOR PROPOSED SURFACE FEATURES, GRADING, AND DRAINAGE.**
4. **SEE "U" SHEETS FOR UTILITY RELOCATIONS**
5. **HGL AND EGL FOR MAIN STORM DRAIN DEPICTS TRUCKEE RIVER FLOWS ONLY.**

N

40 0 40 80

SCALE IN FEET

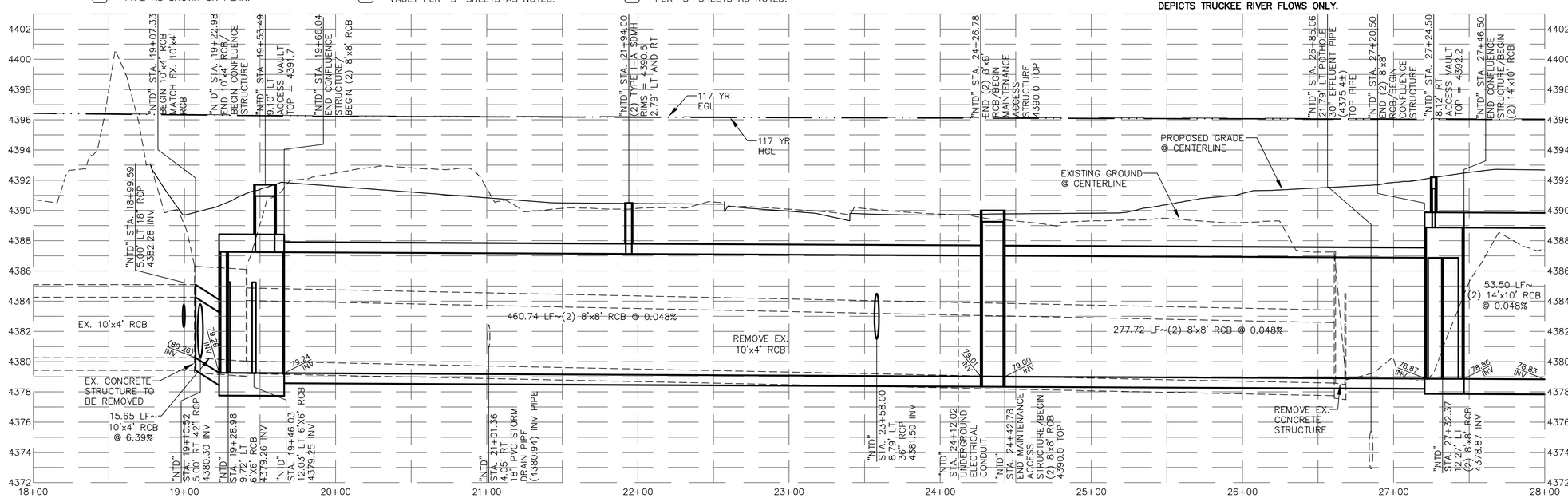

DESIGNED BY: PEO
DRAWN BY: PEO
CHECKED BY: NL
APPROVED BY: NL
SCALE 1"=40' 1"=4'
HORIZ:
VERT:
FIELD BOOK

REV No.	DATE	DESCRIPTION	APPROVED

HDR
HDR Engineering, Inc.
9805 Double R Blvd.
Suite 101
Reno, NV 89521
Phone: 775-337-4700

City of Sparks

NORTH TRUCKEE DRAIN REALIGNMENT PHASE 3

RCB PLAN AND PROFILE
"NTD" STA 18+00 TO STA 28+00

CITY OF SPARKS, NEVADA, PUBLIC WORKS DEPARTMENT

STATE OF NEVADA
NICOLE A. LAUCHLIN
Exp. 12/31/17
CIVIL
No. 10165
PROFESSIONAL ENGINEER
5/11/16

SHEET No
C-2

SHT OF

C:\pwworking\phx\d0351221\C-01x.dwg 05/02/16 6:33am POXBORRO

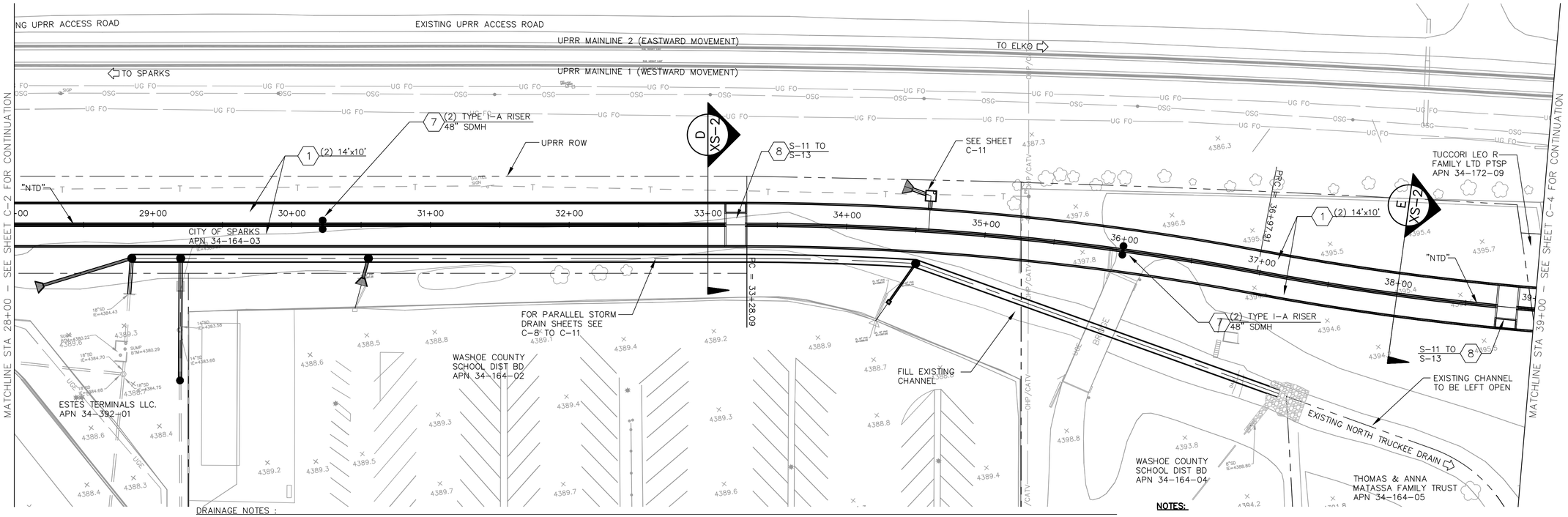

DRAINAGE NOTES :

1. INSTALL STORM DRAIN RCB, SIZE AS SHOWN ON PLAN PER DETAIL SEE SHEET DT-4
2. CONSTRUCT DRAINAGE VAULT, PER SHEET SHOWN ON PLAN.
3. INSTALL RIPRAP PER DETAIL SEE SHEET DT-5. SIZE AND THICKNESS AS SHOWN ON PLAN.
4. INSTALL STORM DRAIN PIPE, SIZE AND TYPE AS SHOWN ON PLAN.
5. CONSTRUCT SUMP STRUCTURE PER DETAIL SEE SHEETS DT-3 AND S-19.
6. NOT USED
7. CONSTRUCT MANHOLE, SIZE AND TYPE AS SHOWN ON PLAN.
8. CONSTRUCT MAINTENANCE ACCESS VAULT PER "S" SHEETS AS NOTED.
9. CONSTRUCT TRANSITION STRUCTURE, PER "S" SHEETS AS NOTED.
10. CONSTRUCT DROP INLET, SIZE AND TYPE AS SHOWN ON PLAN.
11. CONSTRUCT UPRR RATED STORM DRAIN RCB, SIZE AS SHOWN ON PLAN PER "R" AND "S" SHEETS AS NOTED.
12. CONSTRUCT TRANSITION STRUCTURE, PER "S" SHEETS AS NOTED.
13. CONSTRUCT TRASH RACK, PER DETAIL SEE SHEET DT-3

THIS IS A GENERAL LIST. NOT ALL ACTIVITIES ARE USED.

NOTES:

1. **PROTECT EXISTING FEATURES IN PLACE UNLESS NOTED OTHERWISE.**
2. **SEE SHEETS C-8 TO C-11 FOR PARALLEL AND LATERAL STORM DRAINS.**
3. **SEE SHEETS C-13 TO C-16 FOR PROPOSED SURFACE FEATURES, GRADING, AND DRAINAGE.**
4. **SEE "U" SHEETS FOR UTILITY RELOCATIONS**
5. **HGL AND EGL FOR MAIN STORM DRAIN DEPICTS TRUCKEE RIVER FLOWS ONLY.**

N

40 0 40 80

SCALE IN FEET

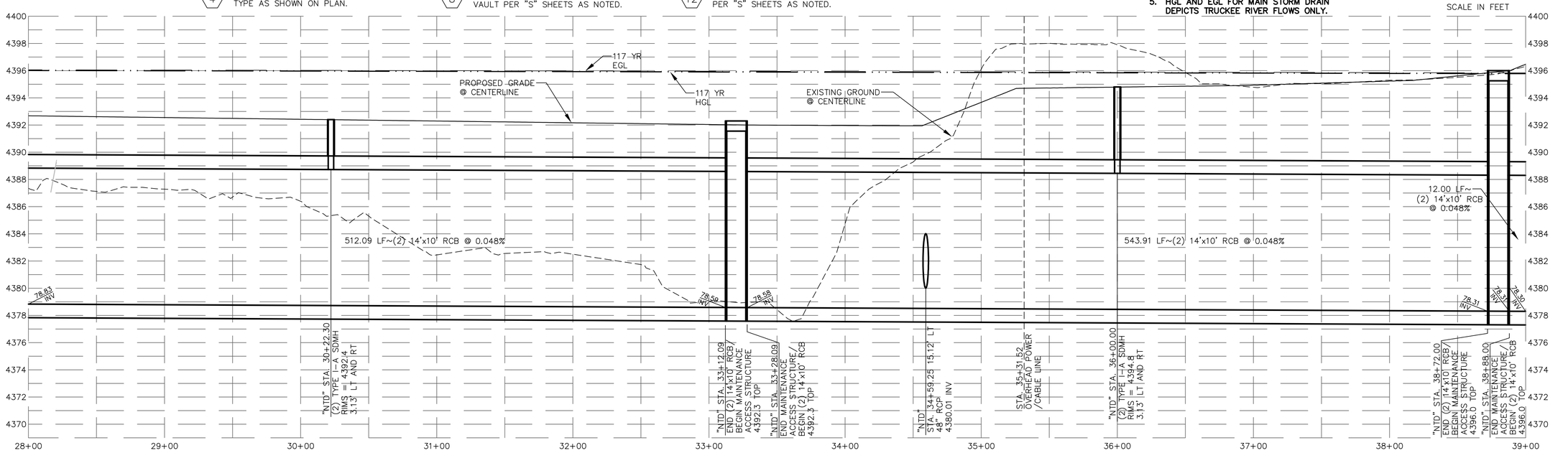

REV No.	DATE	DESCRIPTION	APPROVED

DESIGNED BY: PEO
DRAWN BY: PEO
CHECKED BY: NL
APPROVED BY: NL
SCALE
HORIZ: 1"=40'
VERT: 1"=4'
FIELD BOOK

HDR Engineering, Inc.
9805 Double R Blvd.
Suite 101
Reno, NV 89521
Phone: 775-337-4700

City of Sparks

NORTH TRUCKEE DRAIN REALIGNMENT PHASE 3

RCB PLAN AND PROFILE
'NTD' STA 28+00 TO STA 39+00

CITY OF SPARKS, NEVADA, PUBLIC WORKS DEPARTMENT

STATE OF NEVADA PROFESSIONAL ENGINEER NICHOLAS LAUGHLIN Exp. 12/31/17 CIVIL No. 10169 5/11/16

SHEET No
C-3
SHT OF

C:\pwworking\phx\d0351221\C-01x.dwg 05/02/16 6:33am POXBORRO

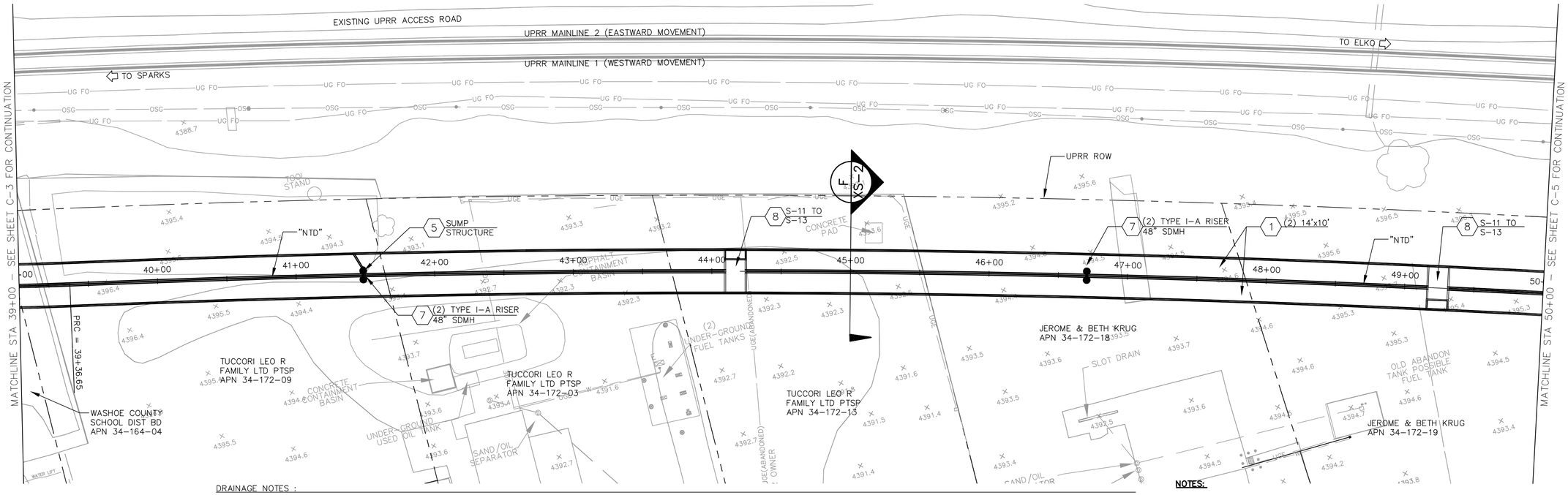

DRAINAGE NOTES :

1. INSTALL STORM DRAIN RCB, SIZE AS SHOWN ON PLAN PER DETAIL SEE SHEET DT-4
2. CONSTRUCT DRAINAGE VAULT, PER SHEET SHOWN ON PLAN.
3. INSTALL RIPRAP PER DETAIL SEE SHEET DT-5. SIZE AND THICKNESS AS SHOWN ON PLAN.
4. INSTALL STORM DRAIN PIPE, SIZE AND TYPE AS SHOWN ON PLAN.
5. CONSTRUCT SUMP STRUCTURE PER DETAIL SEE SHEETS DT-3 AND S-19.
6. NOT USED
7. CONSTRUCT MANHOLE, SIZE AND TYPE AS SHOWN ON PLAN.
8. CONSTRUCT MAINTENANCE ACCESS VAULT PER "S" SHEETS AS NOTED.
9. CONSTRUCT TRANSITION STRUCTURE, PER "S" SHEETS AS NOTED.
10. CONSTRUCT DROP INLET, SIZE AND TYPE AS SHOWN ON PLAN.
11. CONSTRUCT UPRR RATED STORM DRAIN RCB, SIZE AS SHOWN ON PLAN PER "R" AND "S" SHEETS AS NOTED.
12. CONSTRUCT TRANSITION STRUCTURE, PER "S" SHEETS AS NOTED.
13. CONSTRUCT TRASH RACK, PER DETAIL SEE SHEET DT-3

THIS IS A GENERAL LIST. NOT ALL ACTIVITIES ARE USED.

NOTES:

1. PROTECT EXISTING FEATURES IN PLACE UNLESS NOTED OTHERWISE.
2. SEE SHEETS C-8 TO C-11 FOR PARALLEL AND LATERAL STORM DRAINS.
3. SEE SHEETS C-13 TO C-16 FOR PROPOSED SURFACE FEATURES, GRADING, AND DRAINAGE.
4. SEE "U" SHEETS FOR UTILITY RELOCATIONS
5. HGL AND EGL FOR MAIN STORM DRAIN DEPICTS TRUCKEE RIVER FLOWS ONLY.

N

40 0 40 80
SCALE IN FEET

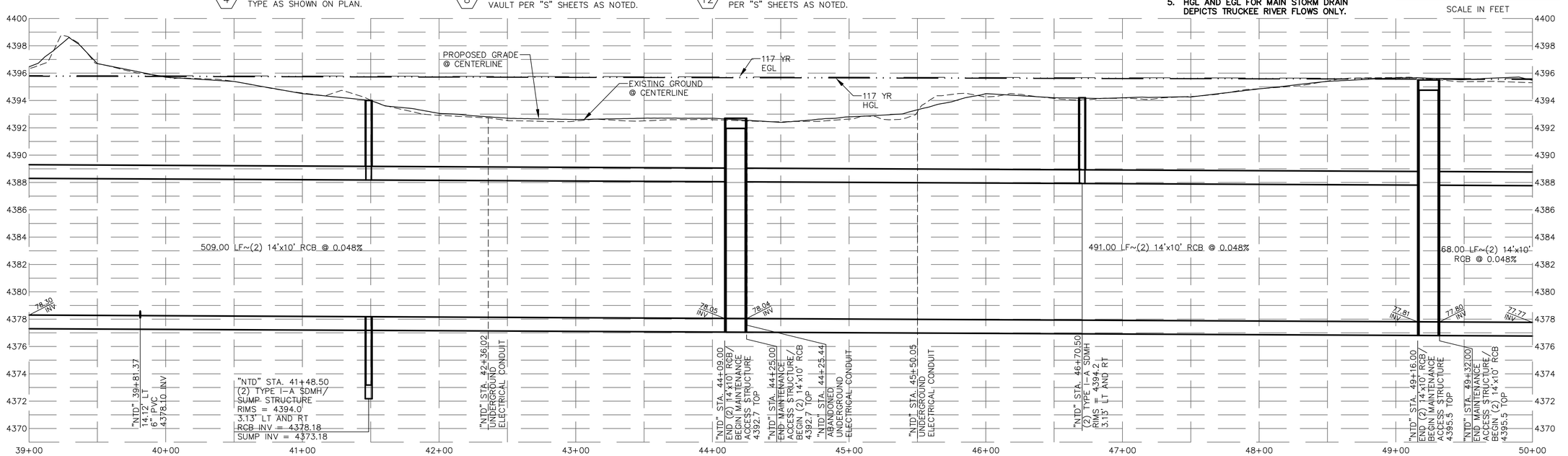

REV No	DATE	DESCRIPTION	APPROVED

DESIGNED BY: PEO
DRAWN BY: PEO
CHECKED BY: NL
APPROVED BY: NL
SCALE
HORIZ: 1"=40'
VERT: 1"=4'
FIELD BOOK

HDR Engineering, Inc.
9805 Double R Blvd.
Suite 101
Reno, NV 89521
Phone: 775-337-4700

City of Sparks

NORTH TRUCKEE DRAIN REALIGNMENT PHASE 3

RCB PLAN AND PROFILE
"NTD" STA 39+00 TO STA 50+00

CITY OF SPARKS, NEVADA, PUBLIC WORKS DEPARTMENT

STATE OF NEVADA
PROFESSIONAL ENGINEER
LAUGHLIN
Exp. 12/31/17
CIVIL
No. 10165
5/11/16

SHEET No
C-4
SHT OF

C:\pwworking\phx\d0351221\C-01x.dwg 05/02/16 6:33am POXBORRO

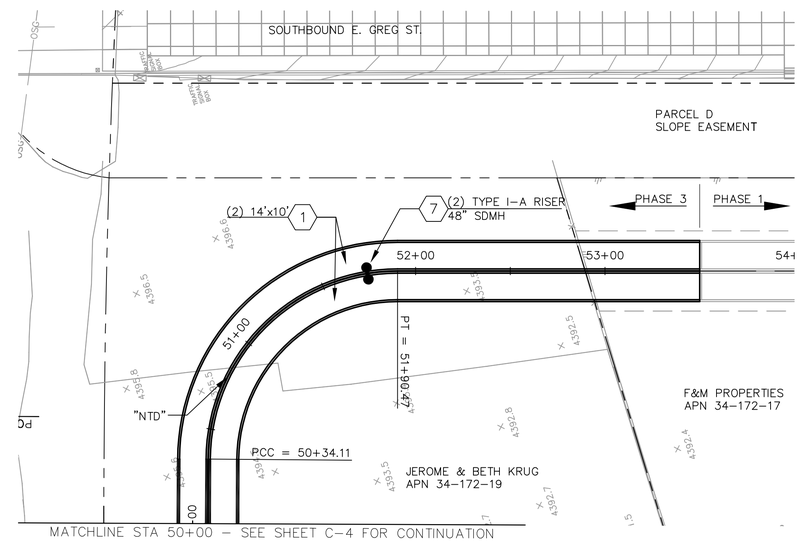

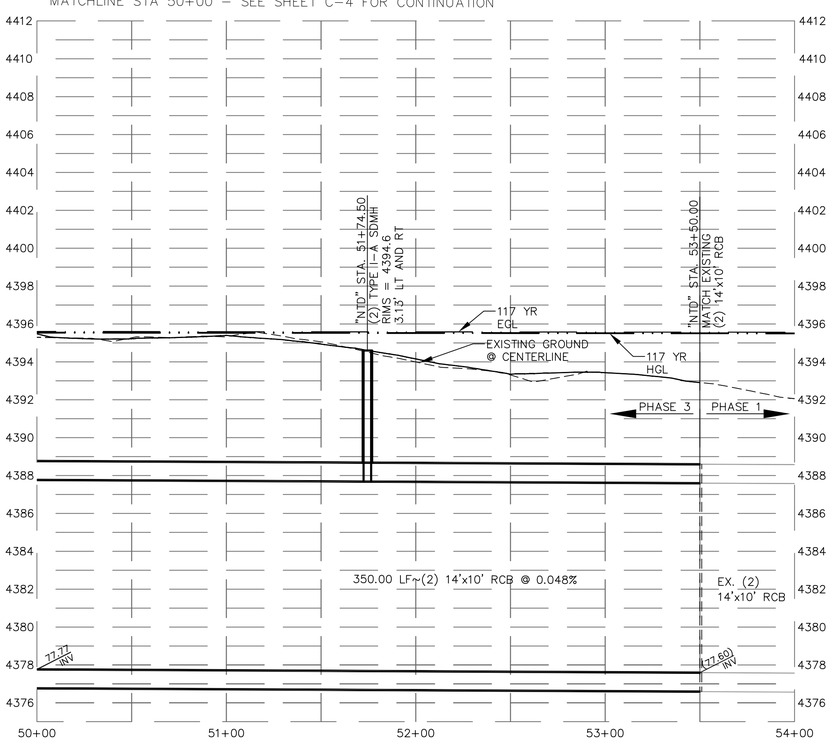

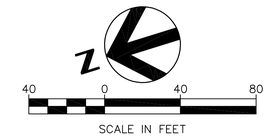

DRAINAGE NOTES :

1. INSTALL STORM DRAIN RCB, SIZE AS SHOWN ON PLAN PER DETAIL SEE SHEET DT-4
2. CONSTRUCT DRAINAGE VAULT, PER SHEET SHOWN ON PLAN
3. INSTALL RIPRAP PER DETAIL SEE SHEET DT-5. SIZE AND THICKNESS AS SHOWN ON PLAN.
4. INSTALL STORM DRAIN PIPE, SIZE AND TYPE AS SHOWN ON PLAN.
5. CONSTRUCT SUMP STRUCTURE PER DETAIL SEE SHEETS DT-3 AND S-19.
6. NOT USED
7. CONSTRUCT MANHOLE, SIZE AND TYPE AS SHOWN ON PLAN.
8. CONSTRUCT MAINTENANCE ACCESS VAULT PER "S" SHEETS AS NOTED.
9. CONSTRUCT TRANSITION STRUCTURE, PER "S" SHEETS AS NOTED.
10. CONSTRUCT DROP INLET, SIZE AND TYPE AS SHOWN ON PLAN.
11. CONSTRUCT UPRR RATED STORM DRAIN RCB, SIZE AS SHOWN ON PLAN PER "R" AND "S" SHEETS AS NOTED.
12. CONSTRUCT SUMP STRUCTURE, PER "S" SHEETS AS NOTED.
13. CONSTRUCT TRASH RACK, PER DETAIL SEE SHEET DT-3

THIS IS A GENERAL LIST. NOT ALL ACTIVITIES ARE USED.

NOTES:

1. **PROTECT EXISTING FEATURES IN PLACE UNLESS NOTED OTHERWISE.**
2. **SEE SHEETS C-8 TO C-11 FOR PARALLEL AND LATERAL STORM DRAINS.**
3. **SEE SHEETS C-13 TO C-16 FOR PROPOSED SURFACE FEATURES, GRADING, AND DRAINAGE.**
4. **SEE "U" SHEETS FOR UTILITY RELOCATIONS**
5. **HGL AND EGL FOR MAIN STORM DRAIN DEPICTS TRUCKEE RIVER FLOWS ONLY.**

REV No.	DATE	DESCRIPTION	APPROVED

DESIGNED BY: PEO
DRAWN BY: PEO
CHECKED BY: NL
APPROVED BY: NL
SCALE
HORIZ: 1"=40'
VERT: 1"=4'
FIELD BOOK

HDR Engineering, Inc.
9805 Double R Blvd.
Suite 101
Reno, NV 89521
Phone: 775-337-4700

City of Sparks

NORTH TRUCKEE DRAIN REALIGNMENT PHASE 3

RCB PLAN AND PROFILE
"NTD" STA 50+00 TO STA 54+00

CITY OF SPARKS, NEVADA, PUBLIC WORKS DEPARTMENT

STATE OF NEVADA
PROFESSIONAL ENGINEER
NICK LAUGHLIN
Exp. 12/31/17
CIVIL
No. 10169
5/11/16

SHEET No
C-5

SHT OF

C:\pwworking\phx\d0351221\C-01x.dwg 05/02/16 6:33am POXBORRO

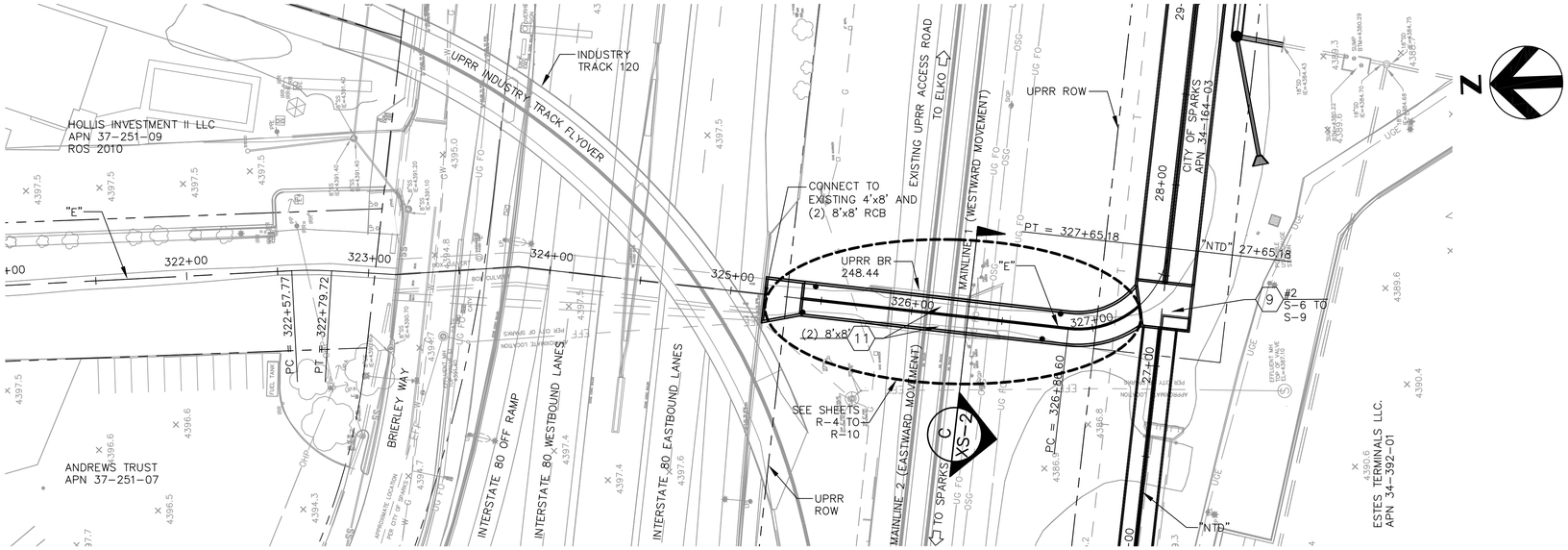

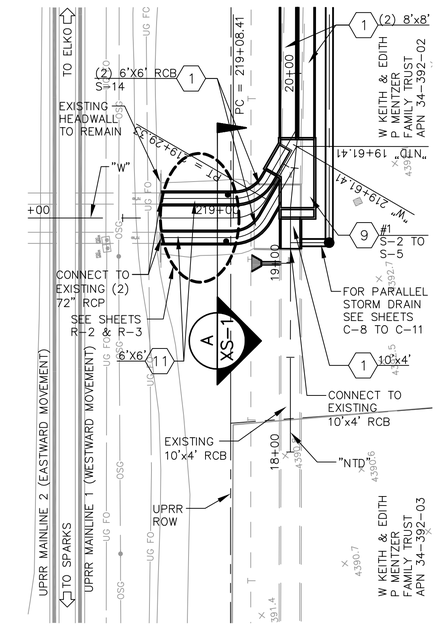

DRAINAGE NOTES :

1. INSTALL STORM DRAIN RCB, SIZE AS SHOWN ON PLAN PER DETAIL SEE SHEET DT-4
2. CONSTRUCT DRAINAGE VAULT, PER SHEET SHOWN ON PLAN.
3. INSTALL RIPRAP PER DETAIL SEE SHEET DT-5. SIZE AND THICKNESS AS SHOWN ON PLAN.
4. INSTALL STORM DRAIN PIPE, SIZE AND TYPE AS SHOWN ON PLAN.
5. CONSTRUCT SUMP STRUCTURE PER DETAIL SEE SHEETS DT-3 AND S-19.
6. NOT USED
7. CONSTRUCT MANHOLE, SIZE AND TYPE AS SHOWN ON PLAN.
8. CONSTRUCT MAINTENANCE ACCESS VAULT PER "S" SHEETS AS NOTED.
9. CONSTRUCT TRANSITION STRUCTURE, PER "S" SHEETS AS NOTED.
10. CONSTRUCT DROP INLET, SIZE AND TYPE AS SHOWN ON PLAN.
11. CONSTRUCT UPRR RATED STORM DRAIN RCB, SIZE AS SHOWN ON PLAN PER "R" AND "S" SHEETS AS NOTED.
12. CONSTRUCT TRANSITION STRUCTURE, PER "S" SHEETS AS NOTED.
13. CONSTRUCT TRASH RACK, PER DETAIL SEE SHEET DT-3

THIS IS A GENERAL LIST. NOT ALL ACTIVITIES ARE USED.

NOTES:

1. **PROTECT EXISTING FEATURES IN PLACE UNLESS NOTED OTHERWISE.**
2. **SEE SHEETS C-8 TO C-11 FOR PARALLEL AND LATERAL STORM DRAINS.**
3. **SEE SHEETS C-13 TO C-16 FOR PROPOSED SURFACE FEATURES, GRADING, AND DRAINAGE.**
4. **SEE "U" SHEETS FOR UTILITY RELOCATIONS**
5. **HGL AND EGL FOR MAIN STORM DRAIN DEPICTS TRUCKEE RIVER FLOWS ONLY.**

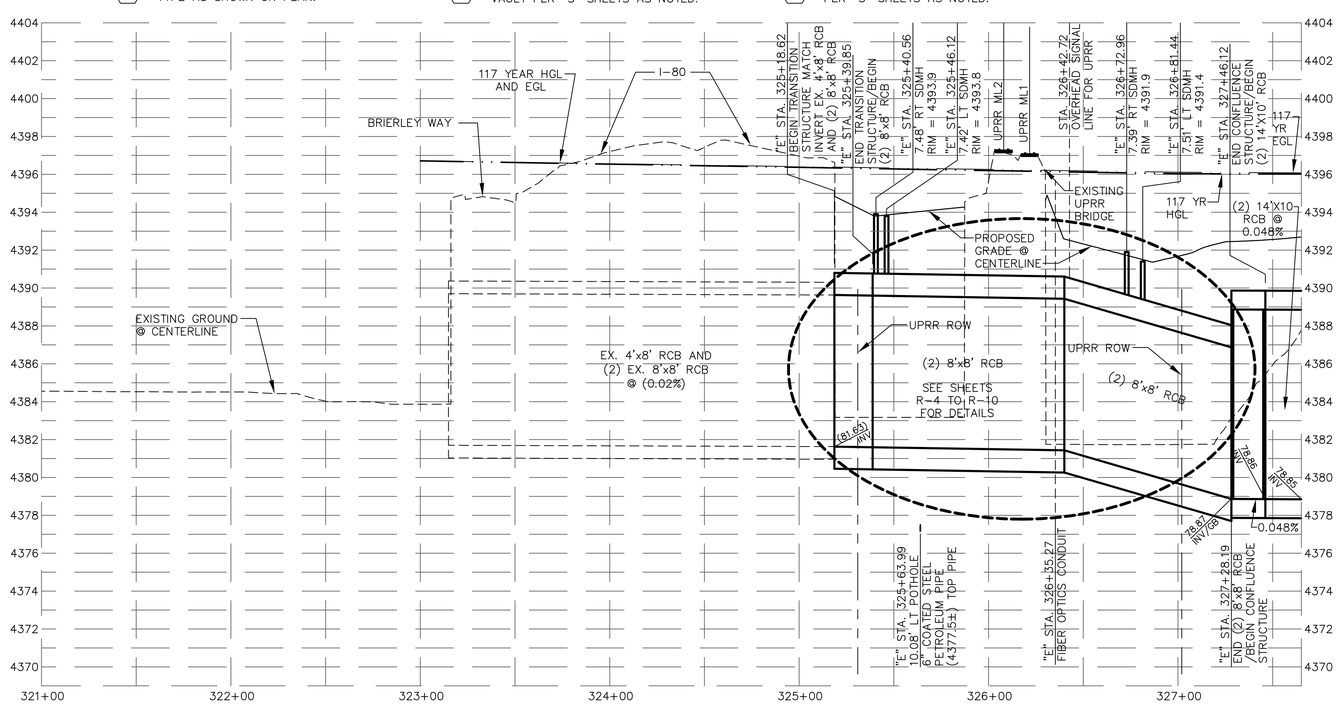

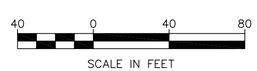

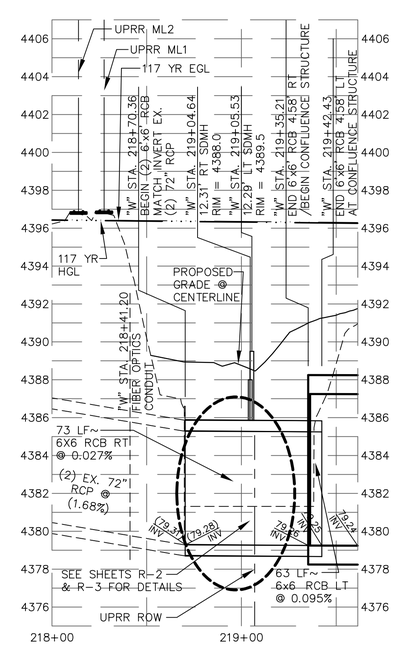

REV No.	DATE	DESCRIPTION	APPROVED

DESIGNED BY: PEO
DRAWN BY: PEO
CHECKED BY: NL
APPROVED BY: NL
SCALE
HORIZ: 1"=40'
VERT: 1"=4'
FIELD BOOK

HDR Engineering, Inc.
9805 Double R Blvd.
Suite 101
Reno, NV 89521
Phone: 775-337-4700

City of Sparks

NORTH TRUCKEE DRAIN REALIGNMENT PHASE 3

RCB PLAN AND PROFILE
"E" STA 321+00 TO STA 327+65.18
AND "W" STA 218+00 TO STA 219+61.41

CITY OF SPARKS, NEVADA, PUBLIC WORKS DEPARTMENT

STATE OF NEVADA PROFESSIONAL ENGINEER NOEL P. LAUGHLIN Exp. 12/31/17 CIVIL No. 10165 5/11/16

SHEET No
C-6
SHT OF

C:\pwworking\phx\d0351221\C-01x.dwg 05/02/16 6:34am POXBORRO

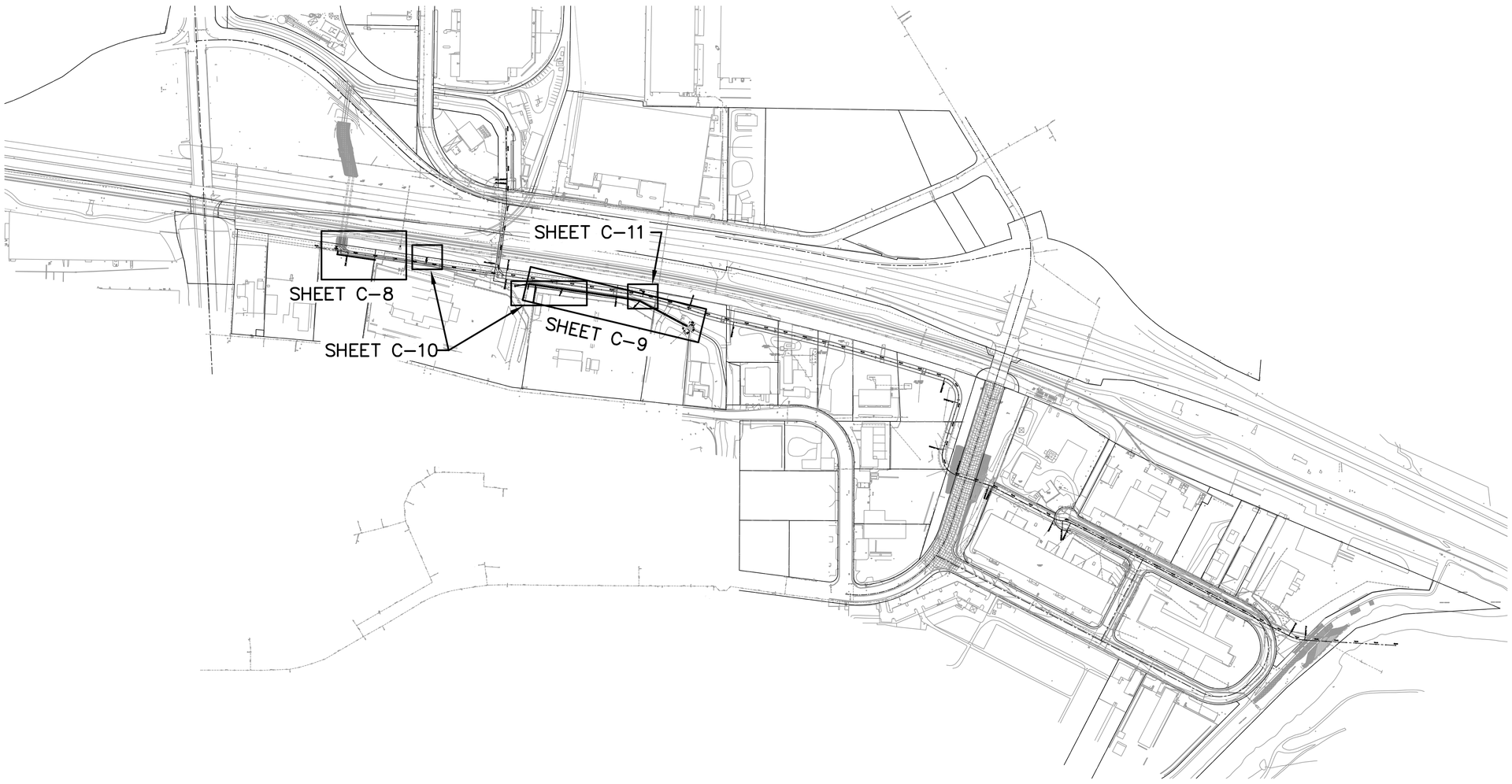

Key Map

NTS

DISCLAIMER NOTE

UTILITY LOCATIONS SHOWN HEREON ARE APPROXIMATE ONLY. IT SHALL BE THE CONTRACTOR'S RESPONSIBILITY TO DETERMINE THE EXACT HORIZONTAL AND VERTICAL LOCATION OF ALL EXISTING UNDERGROUND AND OVERHEAD UTILITIES PRIOR TO COMMENCING CONSTRUCTION. NO REPRESENTATION IS MADE THAT ALL EXISTING UTILITIES ARE SHOWN HEREON. THE ENGINEER ASSUMES NO RESPONSIBILITY FOR UTILITIES NOT SHOWN OR UTILITIES NOT SHOWN IN THEIR PROPER LOCATION.

Avoid cutting underground utility lines. It's costly.
Call before you Dig.
1-800-227-2600
UNDERGROUND SERVICE ALERT (USA)

SAFETY ALERT
Call before you Overhead
775-834-7590
NV Energy Construction Line
24hrs. Prior Notice Required
OVERHEAD SERVICE ALERT

REV No.	DATE	DESCRIPTION	APPROVED

DESIGNED BY: PEO
DRAWN BY: PEO
CHECKED BY: NL
APPROVED BY: NL
SCALE
HORIZ: 1"=40'
VERT: 1"=4'
FIELD BOOK

HDR Engineering, Inc.
9805 Double R Blvd.
Suite 101
Reno, NV 89521
Phone: 775-337-4700

City of Sparks

NORTH TRUCKEE DRAIN REALIGNMENT PHASE 3

PARALLEL AND LATERAL STORM DRAIN
KEY MAP

CITY OF SPARKS, NEVADA, PUBLIC WORKS DEPARTMENT

STATE OF NEVADA
PROFESSIONAL ENGINEER
No. 10165
NOLAN LAUGHLIN
Exp. 12/31/17
CIVIL
5/11/16

SHEET No
C-7
SHT OF

C:\pwworking\phx\d0351221\C-07x.DWG 05/02/16 6:41am POXBORRO

DRAINAGE NOTES :

1. INSTALL STORM DRAIN RCB, SIZE AS SHOWN ON PLAN PER DETAIL SEE SHEET DT-4
2. CONSTRUCT DRAINAGE VAULT, PER SHEET SHOWN ON PLAN.
3. INSTALL RIPRAP PER DETAIL SEE SHEET DT-5. SIZE AND THICKNESS AS SHOWN ON PLAN.
4. INSTALL STORM DRAIN PIPE, SIZE AND TYPE AS SHOWN ON PLAN.
5. CONSTRUCT SUMP STRUCTURE PER DETAIL SEE SHEETS DT-3 AND S-19.
6. NOT USED
7. CONSTRUCT MANHOLE, SIZE AND TYPE AS SHOWN ON PLAN.
8. CONSTRUCT MAINTENANCE ACCESS VAULT PER "S" SHEETS AS NOTED.
9. CONSTRUCT TRANSITION STRUCTURE, PER "S" SHEETS AS NOTED.
10. CONSTRUCT DROP INLET, SIZE AND TYPE AS SHOWN ON PLAN.
11. CONSTRUCT UPRR RATED STORM DRAIN RCB, SIZE AS SHOWN ON PLAN PER "R" AND "S" SHEETS AS NOTED.
12. CONSTRUCT TRANSITION STRUCTURE, PER "S" SHEETS AS NOTED.
13. CONSTRUCT TRASH RACK, PER DETAIL SEE SHEET DT-3

THIS IS A GENERAL LIST. NOT ALL ACTIVITIES ARE USED.

40 0 40 80
SCALE IN FEET

NOTES:

1. MANHOLE INVERT ELEVATIONS SHOWN ARE TO CENTER OF MANHOLE.
2. STORM DRAIN LENGTHS SHOWN ON PROFILES ARE FROM CENTER OF MANHOLE TO CENTER OF MANHOLE AND FROM FACE OF STRUCTURES.
3. ALL RCP STORM DRAIN TO BE CLASS III UNLESS OTHERWISE NOTED ON PLANS.
4. SEE SHEETS C-13 TO C-16 FOR PROPOSED SURFACE FEATURES, GRADING, AND DRAINAGE.
5. PROTECT EXISTING FEATURES IN PLACE UNLESS NOTED OTHERWISE.
6. SEE SHEETS C-2 TO C-6 FOR MAINLINE STORM DRAIN.
7. SEE "U" SHEETS FOR UTILITY RELOCATIONS.
8. HGL AND EGL FOR PARALLEL STORM DRAIN DEPICTS LOCAL DRAINAGE ONLY.

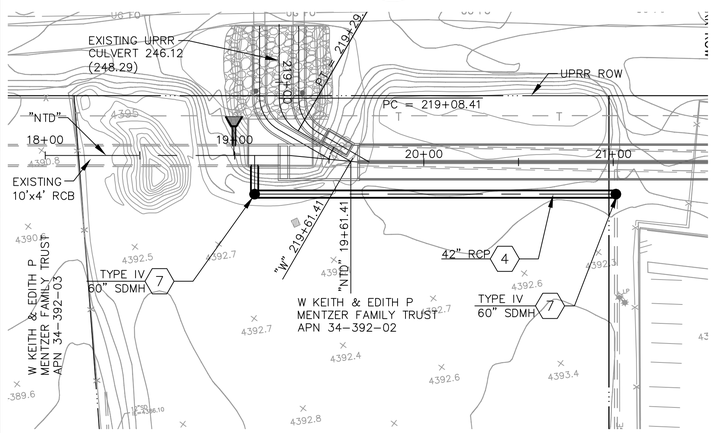

"NTD" STA: 18+00 TO 21+50
STORM DRAIN

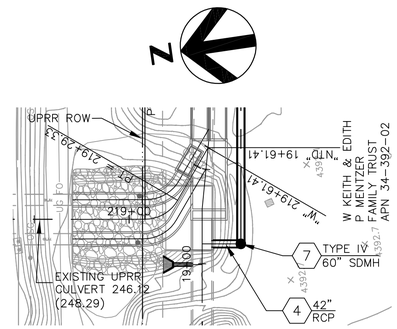

"NTD" STA: 19+10
STORM DRAIN LATERAL

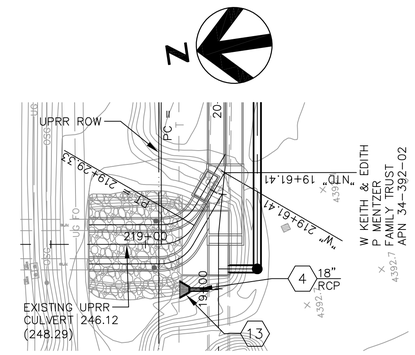

"NTD" STA: 18+99
STORM DRAIN LATERAL

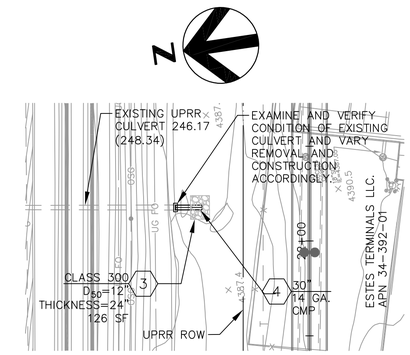

"NTD" STA: 22+18
UPRR CULVERT EXTENSION

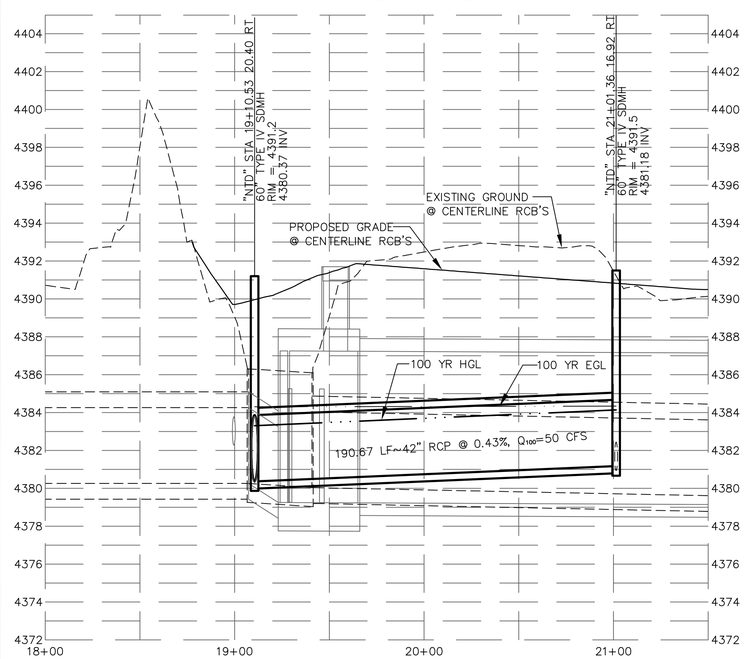

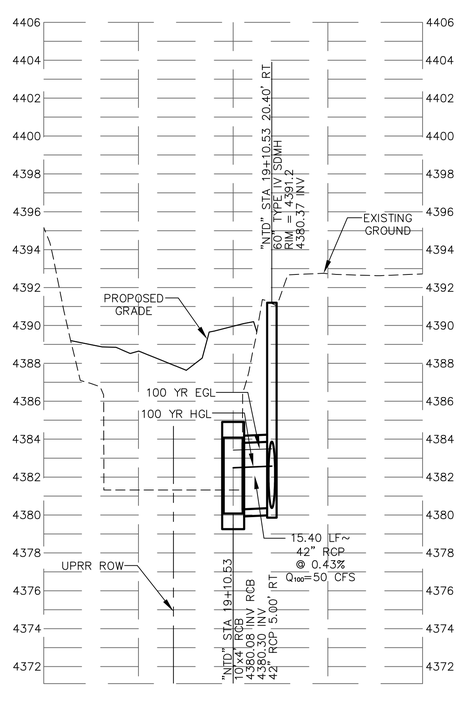

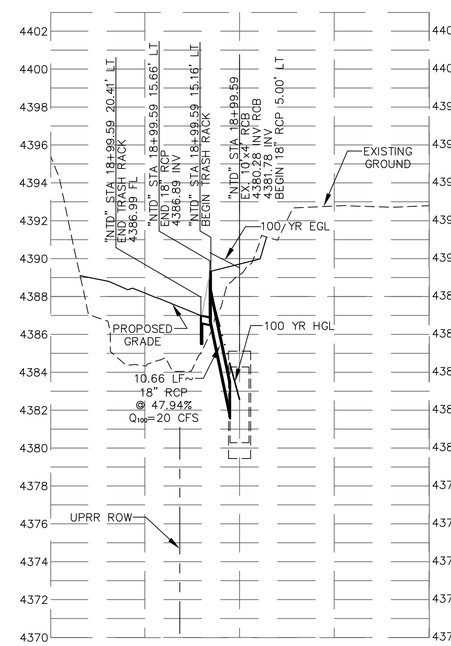

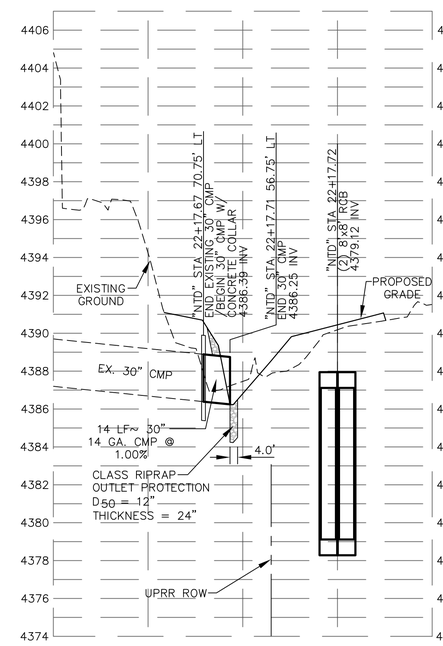

REV No.	DATE	DESCRIPTION	APPROVED

DESIGNED BY: PEO
DRAWN BY: PEO
CHECKED BY: NL
APPROVED BY: NL
SCALE HORIZ: 1"=40' VERT: 1"=4'
FIELD BOOK

HDR Engineering, Inc.
9805 Double R Blvd.
Suite 101
Reno, NV 89521
Phone: 775-337-4700

City of Sparks

NORTH TRUCKEE DRAIN REALIGNMENT PHASE 3

PARALLEL AND LATERAL STORM DRAIN
PLAN AND PROFILE SHEET 1

CITY OF SPARKS, NEVADA, PUBLIC WORKS DEPARTMENT

STATE OF NEVADA PROFESSIONAL ENGINEER NIGEL P. LAUGHLIN Exp. 12/31/17 CIVIL No. 10165 5/11/16

SHEET No
C-8
SHT OF

C:\pwworking\phx\d0351221\C-07x.DWG 05/02/16 6:42am POXBORRO

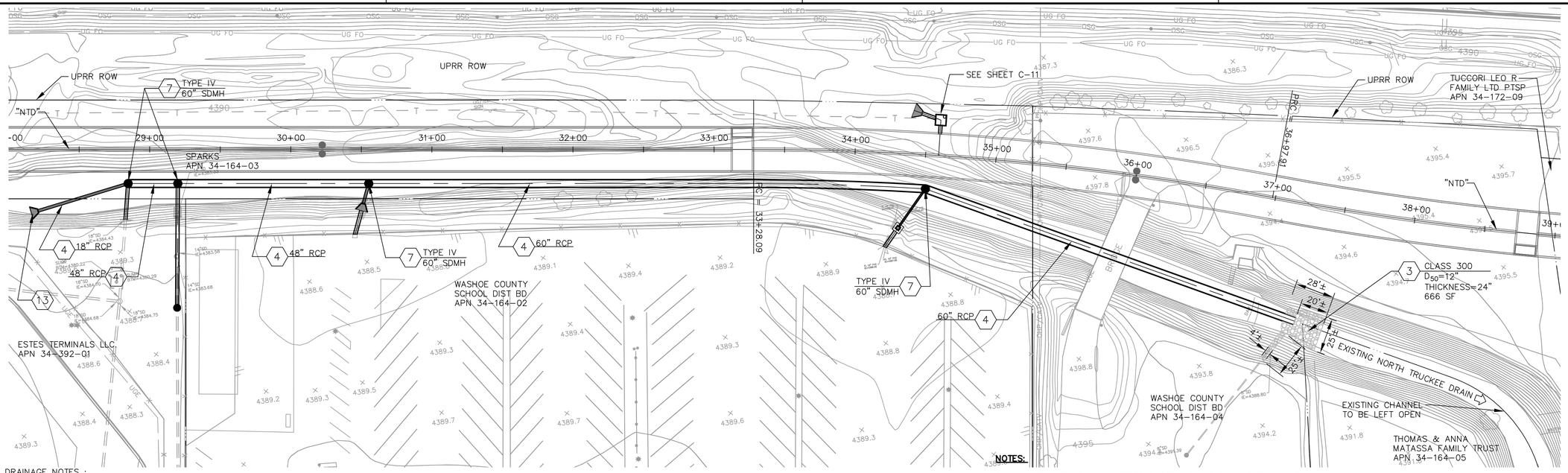

DRAINAGE NOTES :

1. INSTALL STORM DRAIN RCB, SIZE AS SHOWN ON PLAN PER DETAIL SEE SHEET DT-4
2. CONSTRUCT DRAINAGE VAULT, PER SHEET SHOWN ON PLAN.
3. INSTALL RIPRAP PER DETAIL SEE SHEET DT-5. SIZE AND THICKNESS AS SHOWN ON PLAN.
4. INSTALL STORM DRAIN PIPE, SIZE AND TYPE AS SHOWN ON PLAN.
5. CONSTRUCT SUMP STRUCTURE PER DETAIL SEE SHEETS DT-3 AND S-19.
6. NOT USED
7. CONSTRUCT MANHOLE, SIZE AND TYPE AS SHOWN ON PLAN.
8. CONSTRUCT MAINTENANCE ACCESS VAULT PER "S" SHEETS AS NOTED.
9. CONSTRUCT TRANSITION STRUCTURE, PER "S" SHEETS AS NOTED.
10. CONSTRUCT DROP INLET, SIZE AND TYPE AS SHOWN ON PLAN.
11. CONSTRUCT UPRR RATED STORM DRAIN RCB, SIZE AS SHOWN ON PLAN PER "R" AND "S" SHEETS AS NOTED.
12. CONSTRUCT TRANSITION STRUCTURE, PER "S" SHEETS AS NOTED.
13. CONSTRUCT TRASH RACK, PER DETAIL SEE SHEET DT-3

THIS IS A GENERAL LIST. NOT ALL ACTIVITIES ARE USED.

"NTD"
STA: 28+00 TO 39+00
STORM DRAIN

NOTES:

1. MANHOLE INVERT ELEVATIONS SHOWN ARE TO CENTER OF MANHOLE.
2. STORM DRAIN LENGTHS SHOWN ON PROFILES ARE FROM CENTER OF MANHOLE TO CENTER OF MANHOLE AND FROM FACE OF STRUCTURES.
3. ALL RCP STORM DRAIN TO BE CLASS III UNLESS OTHERWISE NOTED ON PLANS.
4. SEE SHEETS C-13 TO C-16 FOR PROPOSED SURFACE FEATURES, GRADING, AND DRAINAGE.
5. PROTECT EXISTING FEATURES IN PLACE UNLESS NOTED OTHERWISE.
6. SEE SHEETS C-2 TO C-6 FOR MAINLINE STORM DRAIN.
7. SEE "U" SHEETS FOR UTILITY RELOCATIONS.
8. HGL AND EGL FOR PARALLEL STORM DRAIN DEPICTS LOCAL DRAINAGE ONLY.

N

40 0 40 80
SCALE IN FEET

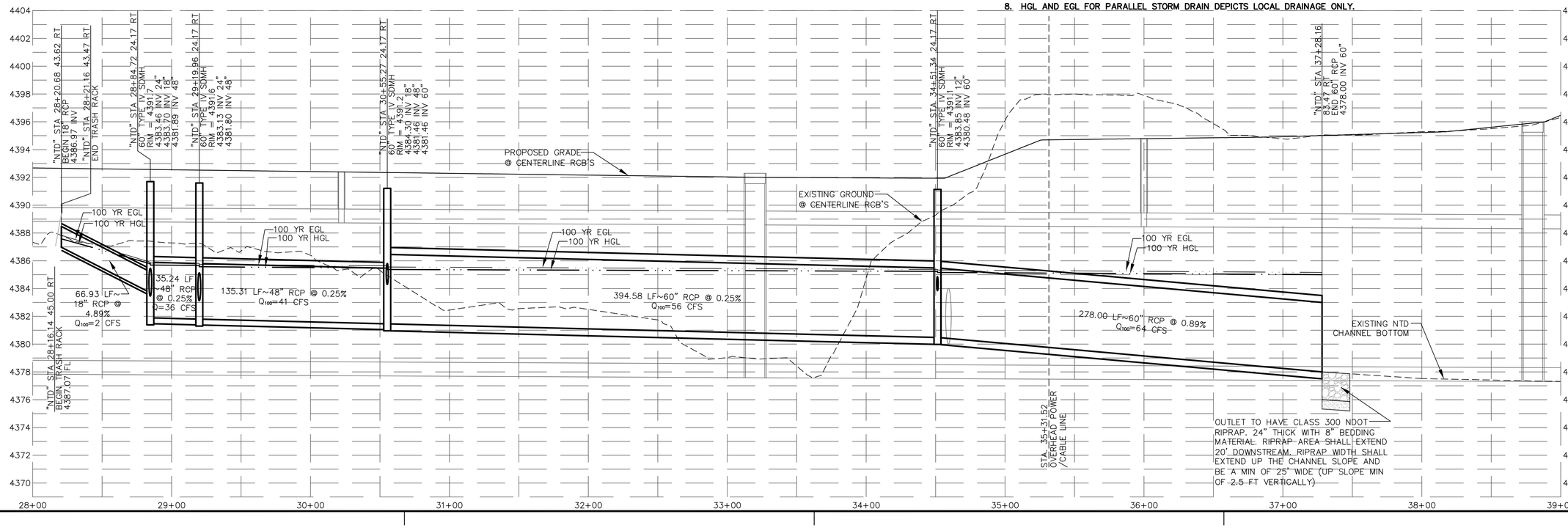

REV No.	DATE	DESCRIPTION	APPROVED

DESIGNED BY: PEO
DRAWN BY: PEO
CHECKED BY: NL
APPROVED BY: NL
SCALE
HORIZ: 1"=40'
VERT: 1"=4'
FIELD BOOK

HDR Engineering, Inc.
9805 Double R Blvd.
Suite 101
Reno, NV 89521
Phone: 775-337-4700

City of Sparks

NORTH TRUCKEE DRAIN REALIGNMENT PHASE 3

PARALLEL AND LATERAL STORM DRAIN PLAN AND PROFILE SHEET 2

CITY OF SPARKS, NEVADA, PUBLIC WORKS DEPARTMENT

STATE OF NEVADA PROFESSIONAL ENGINEER NICHOLAS LAUGHLIN Exp. 12/31/17 CIVIL No. 10169
5/11/16

SHEET No
C-9

SHT OF

C:\pwworking\phx\d0351221\C-07x.DWG 05/02/16 6:42am POXBORRO

DRAINAGE NOTES :

1. INSTALL STORM DRAIN RCB, SIZE AS SHOWN ON PLAN PER DETAIL SEE SHEET DT-4
2. CONSTRUCT DRAINAGE VAULT, PER SHEET SHOWN ON PLAN.
3. INSTALL RIPRAP PER DETAIL SEE SHEET DT-5. SIZE AND THICKNESS AS SHOWN ON PLAN.
4. INSTALL STORM DRAIN PIPE, SIZE AND TYPE AS SHOWN ON PLAN.
5. CONSTRUCT SUMP STRUCTURE PER DETAIL SEE SHEETS DT-3 AND S-19.
6. NOT USED
7. CONSTRUCT MANHOLE, SIZE AND TYPE AS SHOWN ON PLAN.
8. CONSTRUCT MAINTENANCE ACCESS VAULT PER "S" SHEETS AS NOTED.
9. CONSTRUCT TRANSITION STRUCTURE, PER "S" SHEETS AS NOTED.
10. CONSTRUCT DROP INLET, SIZE AND TYPE AS SHOWN ON PLAN.
11. CONSTRUCT UPRR RATED STORM DRAIN RCB, SIZE AS SHOWN ON PLAN PER "R" AND "S" SHEETS AS NOTED.
12. CONSTRUCT TRANSITION STRUCTURE, PER "S" SHEETS AS NOTED.
13. CONSTRUCT TRASH RACK, PER DETAIL SEE SHEET DT-3

THIS IS A GENERAL LIST. NOT ALL ACTIVITIES ARE USED.

NOTES:

1. MANHOLE INVERT ELEVATIONS SHOWN ARE TO CENTER OF MANHOLE.
2. STORM DRAIN LENGTHS SHOWN ON PROFILES ARE FROM CENTER OF MANHOLE TO CENTER OF MANHOLE AND FROM FACE OF STRUCTURES.
3. ALL RCP STORM DRAIN TO BE CLASS III UNLESS OTHERWISE NOTED ON PLANS.
4. SEE SHEETS C-13 TO C-16 FOR PROPOSED SURFACE FEATURES, GRADING, AND DRAINAGE.
5. PROTECT EXISTING FEATURES IN PLACE UNLESS NOTED OTHERWISE.
6. SEE SHEETS C-2 TO C-6 FOR MAINLINE STORM DRAIN.
7. SEE "U" SHEETS FOR UTILITY RELOCATIONS.
8. HGL AND EGL FOR PARALLEL STORM DRAIN DEPICTS LOCAL DRAINAGE ONLY.

40 0 40 80
SCALE IN FEET

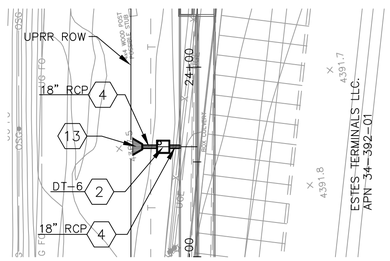

"NTD" STA: 23+58
STORM DRAIN LATERAL

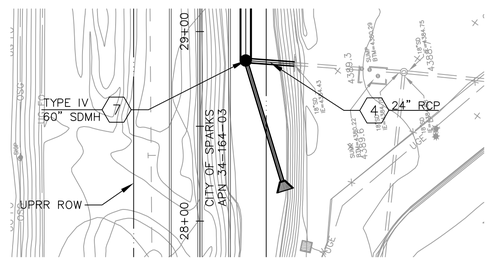

"NTD" STA: 28+84
STORM DRAIN LATERAL

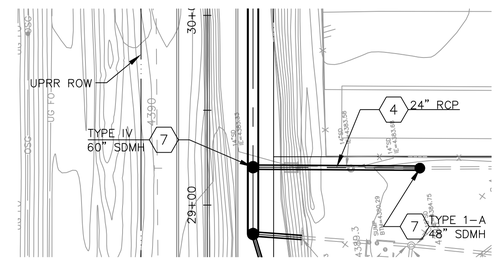

"NTD" STA: 29+19
STORM DRAIN LATERAL

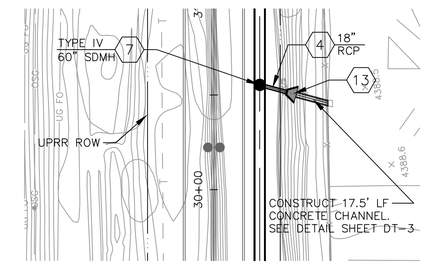

"NTD" STA: 30+55
STORM DRAIN LATERAL

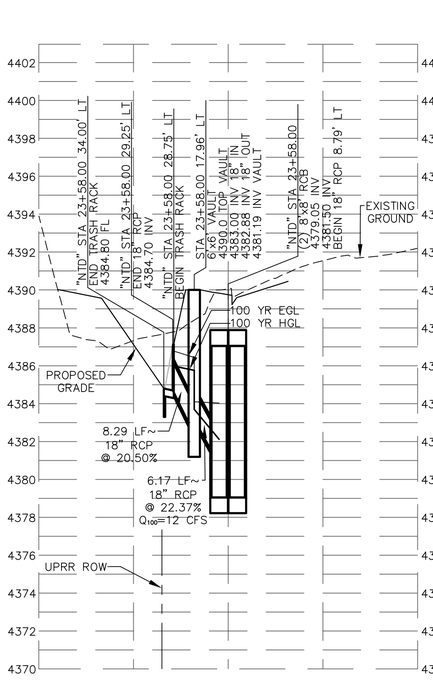

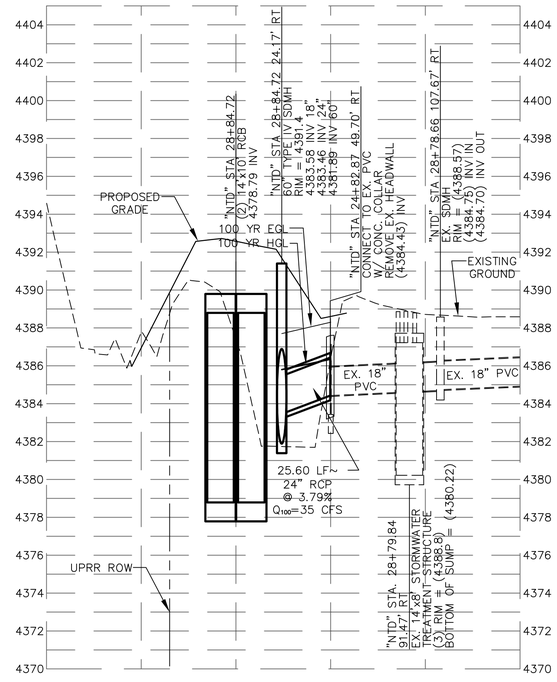

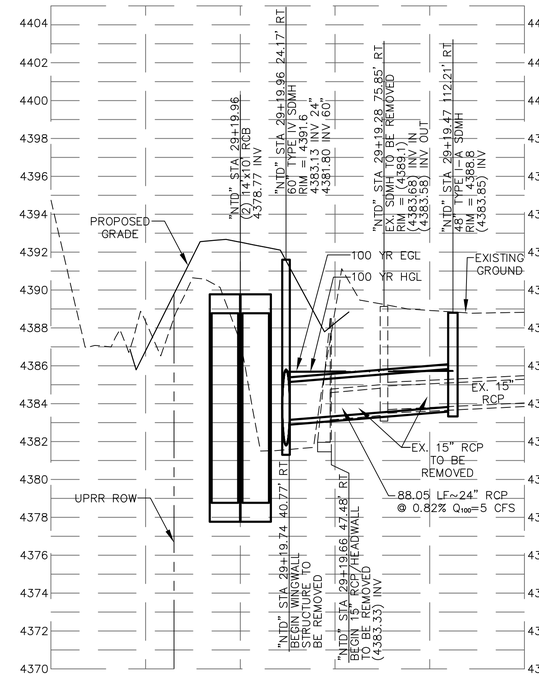

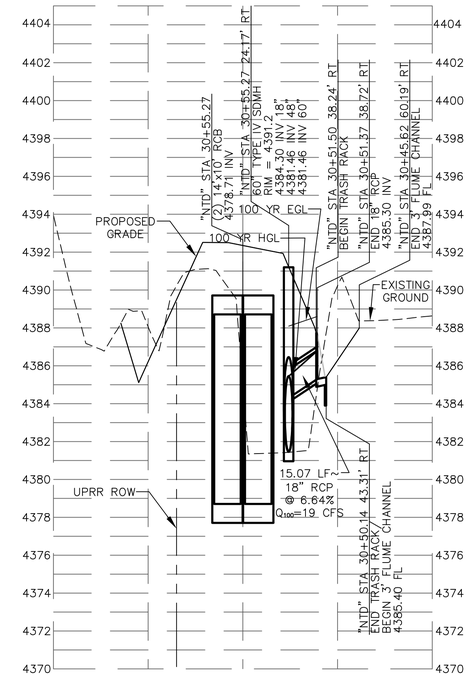

REV No	DATE	DESCRIPTION	APPROVED

DESIGNED BY: PEO
DRAWN BY: PEO
CHECKED BY: NL
APPROVED BY: NL
SCALE
HORIZ: 1"=40'
VERT: 1"=4'
FIELD BOOK

HDR Engineering, Inc.
9805 Double R Blvd.
Suite 101
Reno, NV 89521
Phone: 775-337-4700

City of Sparks

NORTH TRUCKEE DRAIN REALIGNMENT PHASE 3

PARALLEL AND LATERAL STORM DRAIN
PLAN AND PROFILE SHEET 3

CITY OF SPARKS, NEVADA, PUBLIC WORKS DEPARTMENT

STATE OF NEVADA
PROFESSIONAL ENGINEER
NEIL LAUCHLIN
Exp. 12/31/17
CIVIL
No. 10165
5/11/16

SHEET No
C-10

SHT OF

C:\pwworking\phx\d0351221\C-07x.DWG 05/02/16 6:43am POXBORRO

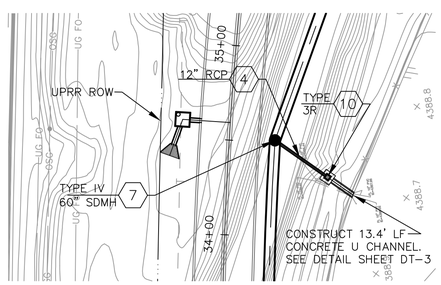

"NTD" STA: 34+51
STORM DRAIN LATERAL

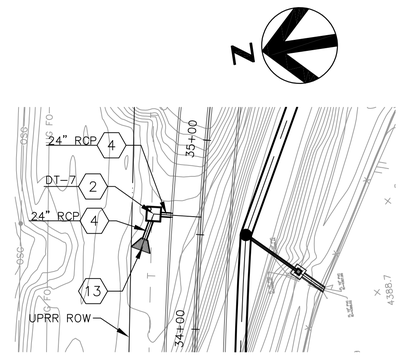

"NTD" STA: 34+59
STORM DRAIN LATERAL

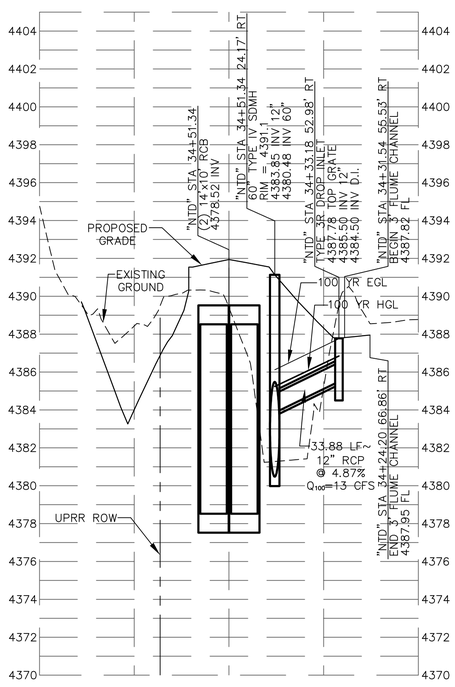

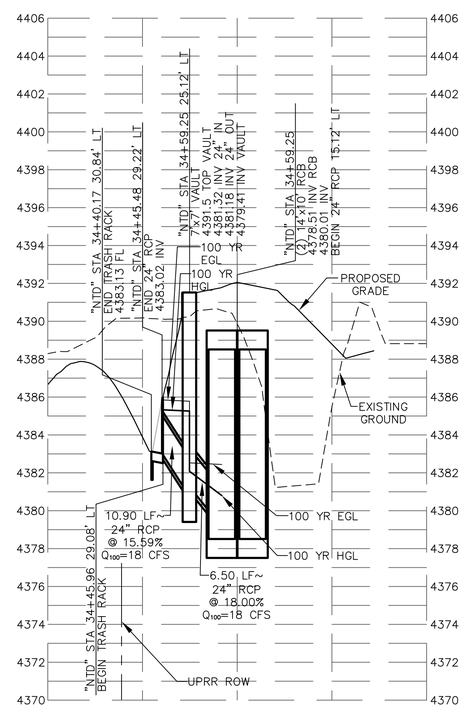

DRAINAGE NOTES :

1. INSTALL STORM DRAIN RCB, SIZE AS SHOWN ON PLAN PER DETAIL SEE SHEET DT-4
2. CONSTRUCT DRAINAGE VAULT, PER SHEET SHOWN ON PLAN
3. INSTALL RIPRAP PER DETAIL SEE SHEET DT-5. SIZE AND THICKNESS AS SHOWN ON PLAN.
4. INSTALL STORM DRAIN PIPE, SIZE AND TYPE AS SHOWN ON PLAN.
5. CONSTRUCT SUMP STRUCTURE PER DETAIL SEE SHEETS DT-3 AND S-19.
6. NOT USED
7. CONSTRUCT MANHOLE, SIZE AND TYPE AS SHOWN ON PLAN.
8. CONSTRUCT MAINTENANCE ACCESS VAULT PER "S" SHEETS AS NOTED.
9. CONSTRUCT TRANSITION STRUCTURE, PER "S" SHEETS AS NOTED.
10. CONSTRUCT DROP INLET, SIZE AND TYPE AS SHOWN ON PLAN.
11. CONSTRUCT UPRR RATED STORM DRAIN RCB, SIZE AS SHOWN ON PLAN PER "R" AND "S" SHEETS AS NOTED.
12. CONSTRUCT SUMP STRUCTURE, PER "S" SHEETS AS NOTED.
13. CONSTRUCT TRASH RACK, PER DETAIL SEE SHEET DT-3

THIS IS A GENERAL LIST. NOT ALL ACTIVITIES ARE USED.

NOTES:

1. MANHOLE INVERT ELEVATIONS SHOWN ARE TO CENTER OF MANHOLE.
2. STORM DRAIN LENGTHS SHOWN ON PROFILES ARE FROM CENTER OF MANHOLE TO CENTER OF MANHOLE AND FROM FACE OF STRUCTURES.
3. ALL RCP STORM DRAIN TO BE CLASS III UNLESS OTHERWISE NOTED ON PLANS.
4. SEE SHEETS C-13 TO C-16 FOR PROPOSED SURFACE FEATURES, GRADING, AND DRAINAGE.
5. PROTECT EXISTING FEATURES IN PLACE UNLESS NOTED OTHERWISE.
6. SEE SHEETS C-2 TO C-6 FOR MAINLINE STORM DRAIN.
7. SEE "U" SHEETS FOR UTILITY RELOCATIONS.
8. HGL AND EGL FOR PARALLEL STORM DRAIN DEPICTS LOCAL DRAINAGE ONLY.

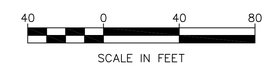

REV No	DATE	DESCRIPTION	APPROVED

DESIGNED BY: PEO
DRAWN BY: PEO
CHECKED BY: NL
APPROVED BY: NL
SCALE
HORIZ: 1"=40'
VERT: 1"=4'
FIELD BOOK

HDR Engineering, Inc.
9805 Double R Blvd.
Suite 101
Reno, NV 89521
Phone: 775-337-4700

City of Sparks

NORTH TRUCKEE DRAIN REALIGNMENT PHASE 3

PARALLEL AND LATERAL STORM DRAIN
PLAN AND PROFILE SHEET 4

CITY OF SPARKS, NEVADA, PUBLIC WORKS DEPARTMENT

STATE OF NEVADA
PROFESSIONAL ENGINEER
NICK LAUGHLIN
Exp. 12/31/17
CIVIL
No. 10169
5/11/16

SHEET No
C-11

SHT OF

C:\pwworking\phx\d0351221\C-07x.DWG 05/02/16 6:43am POXBORRO

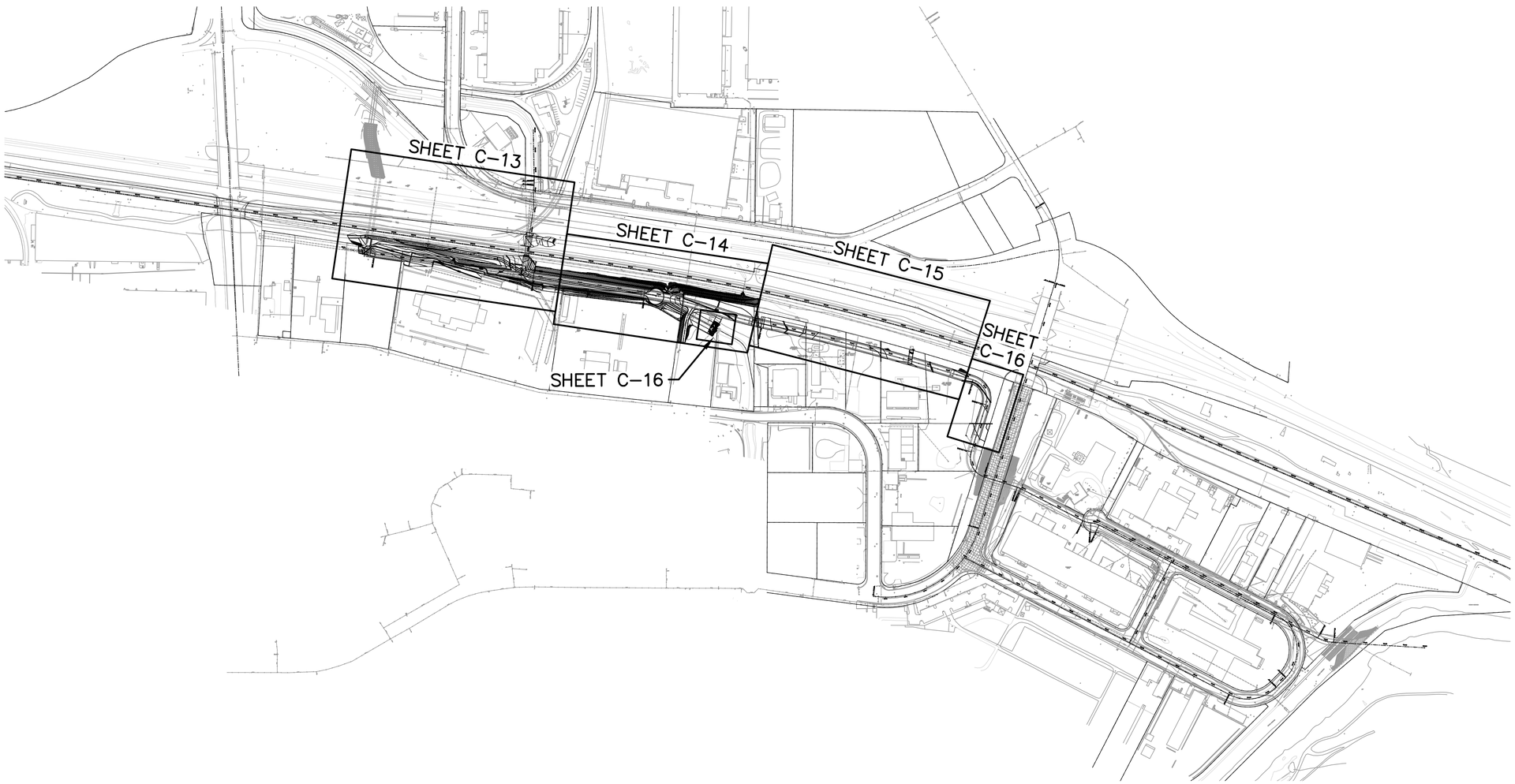

Key Map

NTS

DISCLAIMER NOTE

UTILITY LOCATIONS SHOWN HEREON ARE APPROXIMATE ONLY. IT SHALL BE THE CONTRACTOR'S RESPONSIBILITY TO DETERMINE THE EXACT HORIZONTAL AND VERTICAL LOCATION OF ALL EXISTING UNDERGROUND AND OVERHEAD UTILITIES PRIOR TO COMMENCING CONSTRUCTION. NO REPRESENTATION IS MADE THAT ALL EXISTING UTILITIES ARE SHOWN HEREON. THE ENGINEER ASSUMES NO RESPONSIBILITY FOR UTILITIES NOT SHOWN OR UTILITIES NOT SHOWN IN THEIR PROPER LOCATION.

Avoid cutting underground utility lines. It's costly.
Call before you Dig.
1-800-227-2600
UNDERGROUND SERVICE ALERT (USA)

SAFETY ALERT
Call before you Overhead
775-834-7590
NV Energy Construction Line
24hrs. Prior Notice Required
OVERHEAD SERVICE ALERT

REV No.	DATE	DESCRIPTION	APPROVED

DESIGNED BY: PEO
DRAWN BY: PEO
CHECKED BY: NL
APPROVED BY: NL
SCALE
HORIZ: 1"=40'
VERT: N/A
FIELD BOOK

HDR Engineering, Inc.
9805 Double R Blvd.
Suite 101
Reno, NV 89521
Phone: 775-337-4700

City of Sparks

NORTH TRUCKEE DRAIN REALIGNMENT PHASE 3

GRADING PLAN
KEY MAP

CITY OF SPARKS, NEVADA, PUBLIC WORKS DEPARTMENT

STATE OF NEVADA
NICOLE LAUGHLIN
Exp. 12/31/17
CIVIL
No. 10165
PROFESSIONAL ENGINEER
5/11/16

SHEET No
C-12

SHT OF

C:\pwworking\phx\d0351221\C-12x.dwg 05/02/16 6:51am POXBORRO

GRADING NOTES :

1. CONSTRUCT P.C.C. CURB AND GUTTER. SIZE AND TYPE SHOWN ON PLANS. PER DETAILS SHEET DT-1
2. PLACE PLANTMIX BITUMINOUS PAVEMENT SURFACE. PER TYPICAL SECTIONS, SHEET XS-1.
3. CONSTRUCT TYPE "A" CURB, PER DETAILS SHEET DT-2
4. REPLACE FENCE, TYPE AS SHOWN ON PLAN.
5. CONTRACTOR TO COORDINATE ROCKERY WALL DESIGN WITH VENDOR.
6. CONSTRUCT GRAVEL MAINTENANCE ROAD. PER TYPICAL SECTIONS, SHEET XS-1.

THIS IS A GENERAL LIST. NOT ALL ACTIVITIES ARE USED.

NOTE:

1. **PROTECT EXISTING FEATURES IN PLACE UNLESS NOTED OTHERWISE.**
2. **PROPOSED CONTOURS TIE-IN TO GROUND SURVEY. EXISTING CONTOURS PER AERIAL SURVEY.**
3. **SEE SHEETS HC-1 THRU HC-6 FOR HORIZONTAL CONTROL, SHEETS D-2 THRU D-3 FOR DEMOLITION, SHEETS C-2 THRU C-6 FOR RCB PLAN AND PROFILES, SHEETS C-8 THRU C-11 FOR PARALLEL AND LATERAL STORM DRAIN PLAN AND PROFILES, SHEETS DT-1 THRU DT-7 FOR DETAILS, S-1 THRU S-24 FOR CIVIL STRUCTURAL AND SHEETS R-1 THRU R-10 FOR UPRR STRUCTURAL.**

40 0 40 80
SCALE IN FEET

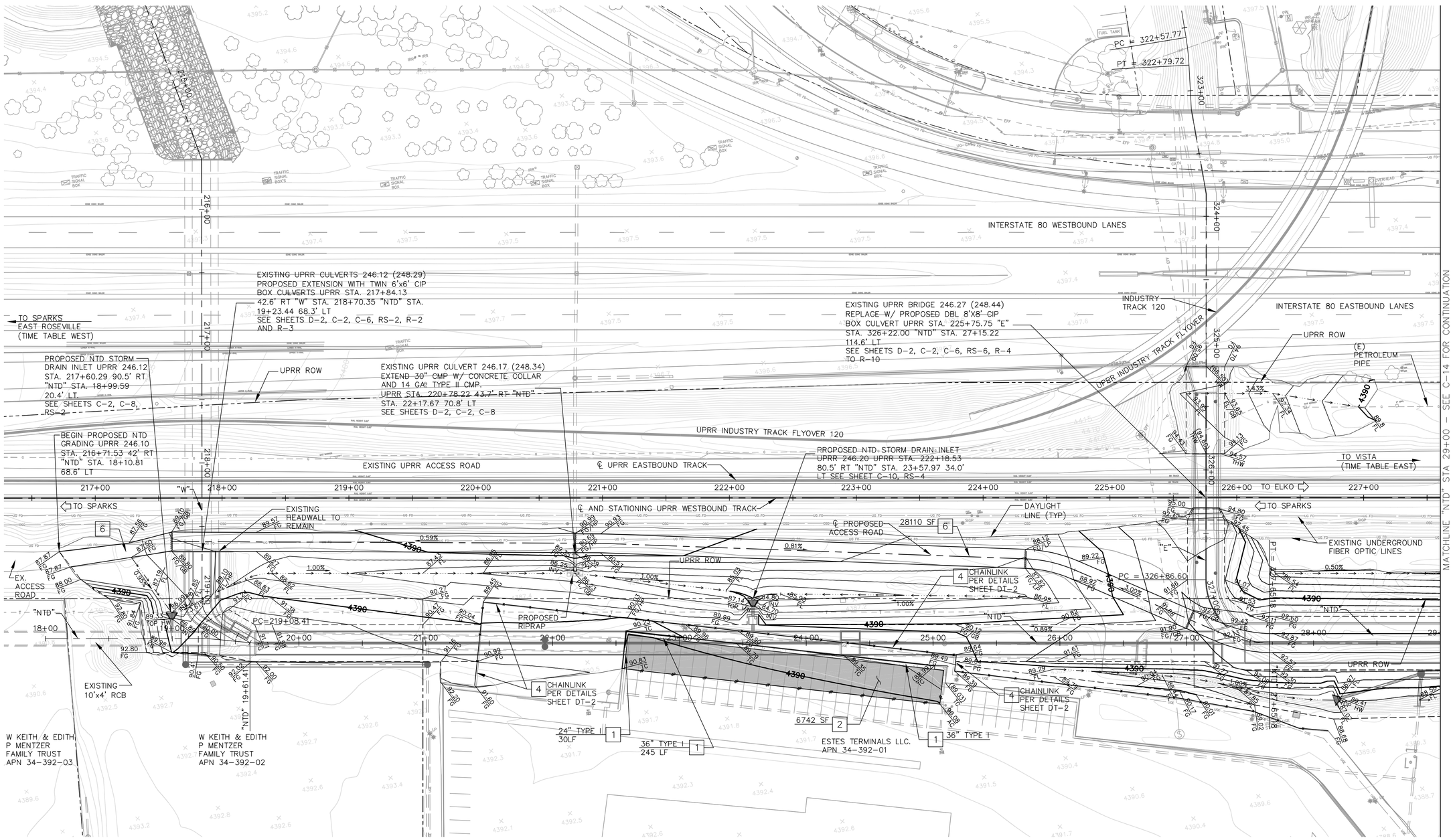

REV No	DATE	DESCRIPTION	APPROVED

DESIGNED BY: PEO
DRAWN BY: PEO
CHECKED BY: NL
APPROVED BY: NL
SCALE
HORIZ: 1"=40'
VERT: N/A
FIELD BOOK

HDR Engineering, Inc.
9805 Double R Blvd.
Suite 101
Reno, NV 89521
Phone: 775-337-4700

City of Sparks

NORTH TRUCKEE DRAIN REALIGNMENT PHASE 3

GRADING PLAN 'NTD' STA 18+00 TO STA 29+00 AND 'E' STA 325+00 TO STA 326+00

CITY OF SPARKS, NEVADA, PUBLIC WORKS DEPARTMENT

STATE OF NEVADA
LAUGHLIN
Exp. 12/31/17
CIVIL
No. 10159
PROFESSIONAL ENGINEER
5/11/16

SHEET No
C-13

SHT OF

C:\pwworking\phx\d0351221\C-12x.dwg 05/02/16 6:51am POXBORRO

GRADING NOTES :

1. CONSTRUCT P.C.C. CURB AND GUTTER. SIZE AND TYPE SHOWN ON PLANS. PER DETAILS SHEET DT-1
2. PLACE PLANTMIX BITUMINOUS PAVEMENT SURFACE. PER TYPICAL SECTIONS, SHEET XS-1.
3. CONSTRUCT TYPE "A" CURB, PER DETAILS SHEET DT-2
4. REPLACE FENCE, TYPE AS SHOWN ON PLAN.
5. CONTRACTOR TO COORDINATE ROCKERY WALL DESIGN WITH VENDOR.
6. CONSTRUCT GRAVEL MAINTENANCE ROAD. PER TYPICAL SECTIONS, SHEET XS-1.

THIS IS A GENERAL LIST. NOT ALL ACTIVITIES ARE USED.

NOTE:

1. **PROTECT EXISTING FEATURES IN PLACE UNLESS NOTED OTHERWISE.**
2. **PROPOSED CONTOURS TIE-IN TO GROUND SURVEY. EXISTING CONTOURS PER AERIAL SURVEY.**
3. **SEE SHEETS HC-1 THRU HC-6 FOR HORIZONTAL CONTROL, SHEETS D-2 THRU D-3 FOR DEMOLITION, SHEETS C-2 THRU C-6 FOR RCB PLAN AND PROFILES, SHEETS C-8 THRU C-11 FOR PARALLEL AND LATERAL STORM DRAIN PLAN AND PROFILES, SHEETS DT-1 THRU DT-7 FOR DETAILS, S-1 THRU S-24 FOR CIVIL STRUCTURAL AND SHEETS R-1 THRU R-10 FOR UPRR STRUCTURAL.**

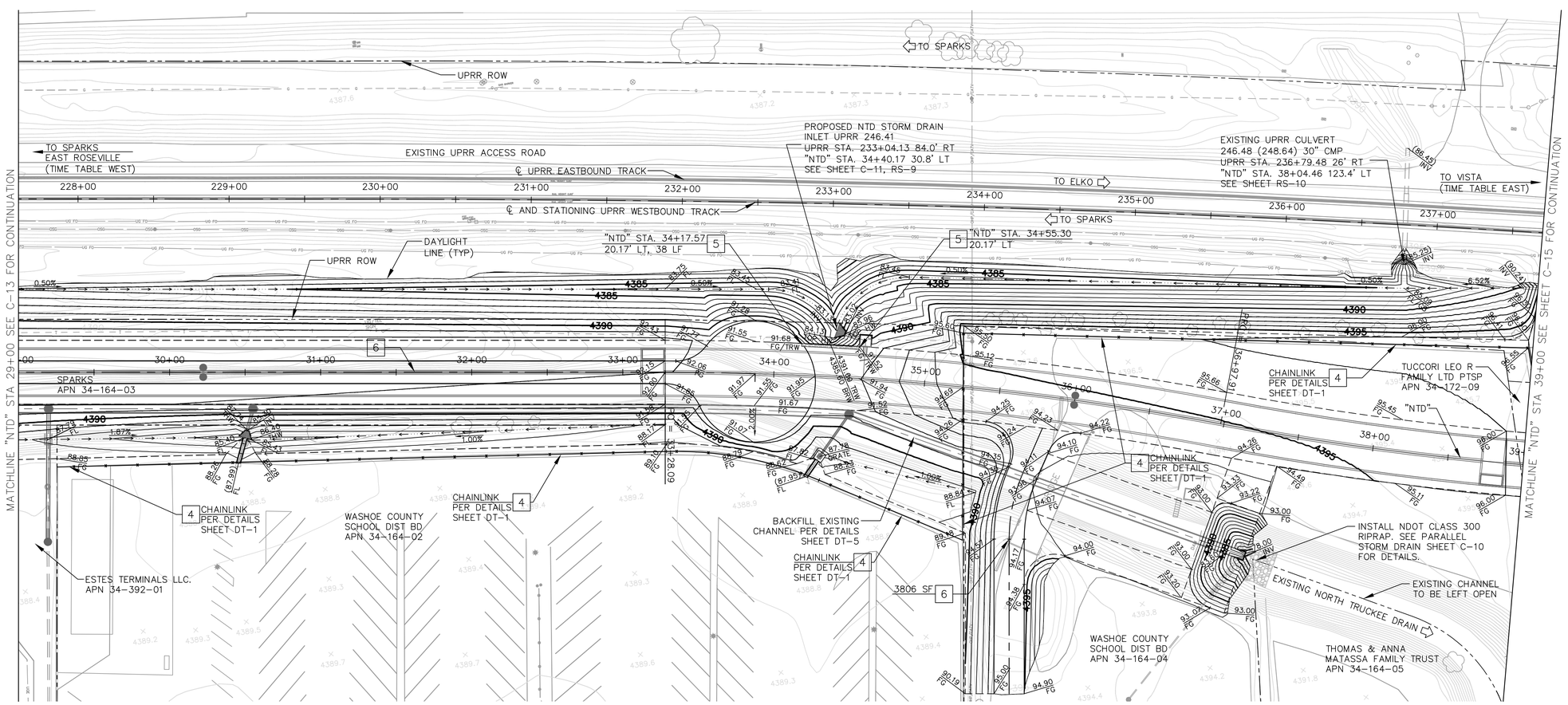

REV No	DATE	DESCRIPTION	APPROVED

DESIGNED BY: PEO
DRAWN BY: PEO
CHECKED BY: NL
APPROVED BY: NL
SCALE
HORIZ: 1"=40'
VERT: N/A
FIELD BOOK

HDR
HDR Engineering, Inc.
9805 Double R Blvd.
Suite 101
Reno, NV 89521
Phone: 775-337-4700

City of Sparks

NORTH TRUCKEE DRAIN REALIGNMENT PHASE 3

GRADING PLAN "NTD" STA 29+00 TO STA 39+00

CITY OF SPARKS, NEVADA, PUBLIC WORKS DEPARTMENT

STATE OF NEVADA
PROFESSIONAL ENGINEER
No. 10165
NOEL LAUGHLIN
Exp. 12/31/17
CIVIL
5/11/16

SHEET No
C-14

SHT OF

C:\pwworking\phx\d0351221\C-12x.dwg 05/02/16 6:51am POXBORRO

GRADING NOTES :

1. CONSTRUCT P.C.C. CURB AND GUTTER. SIZE AND TYPE SHOWN ON PLANS. PER DETAILS SHEET DT-1
2. PLACE PLANTMIX BITUMINOUS PAVEMENT SURFACE. PER TYPICAL SECTIONS, SHEET XS-1.
3. CONSTRUCT TYPE "A" CURB, PER DETAILS SHEET DT-2
4. REPLACE FENCE, TYPE AS SHOWN ON PLAN.
5. CONTRACTOR TO COORDINATE ROCKERY WALL DESIGN WITH VENDOR.
6. CONSTRUCT GRAVEL MAINTENANCE ROAD. PER TYPICAL SECTIONS, SHEET XS-1.

THIS IS A GENERAL LIST. NOT ALL ACTIVITIES ARE USED.

NOTE:

1. **PROTECT EXISTING FEATURES IN PLACE UNLESS NOTED OTHERWISE.**
2. **PROPOSED CONTOURS TIE-IN TO GROUND SURVEY. EXISTING CONTOURS PER AERIAL SURVEY.**
3. **SEE SHEETS HC-1 THRU HC-6 FOR HORIZONTAL CONTROL, SHEETS D-2 THRU D-3 FOR DEMOLITION, SHEETS C-2 THRU C-6 FOR RCB PLAN AND PROFILES, SHEETS C-8 THRU C-11 FOR PARALLEL AND LATERAL STORM DRAIN PLAN AND PROFILES, SHEETS DT-1 THRU DT-7 FOR DETAILS, S-1 THRU S-24 FOR CIVIL STRUCTURAL AND SHEETS R-1 THRU R-10 FOR UPRR STRUCTURAL.**

40 0 40 80
SCALE IN FEET

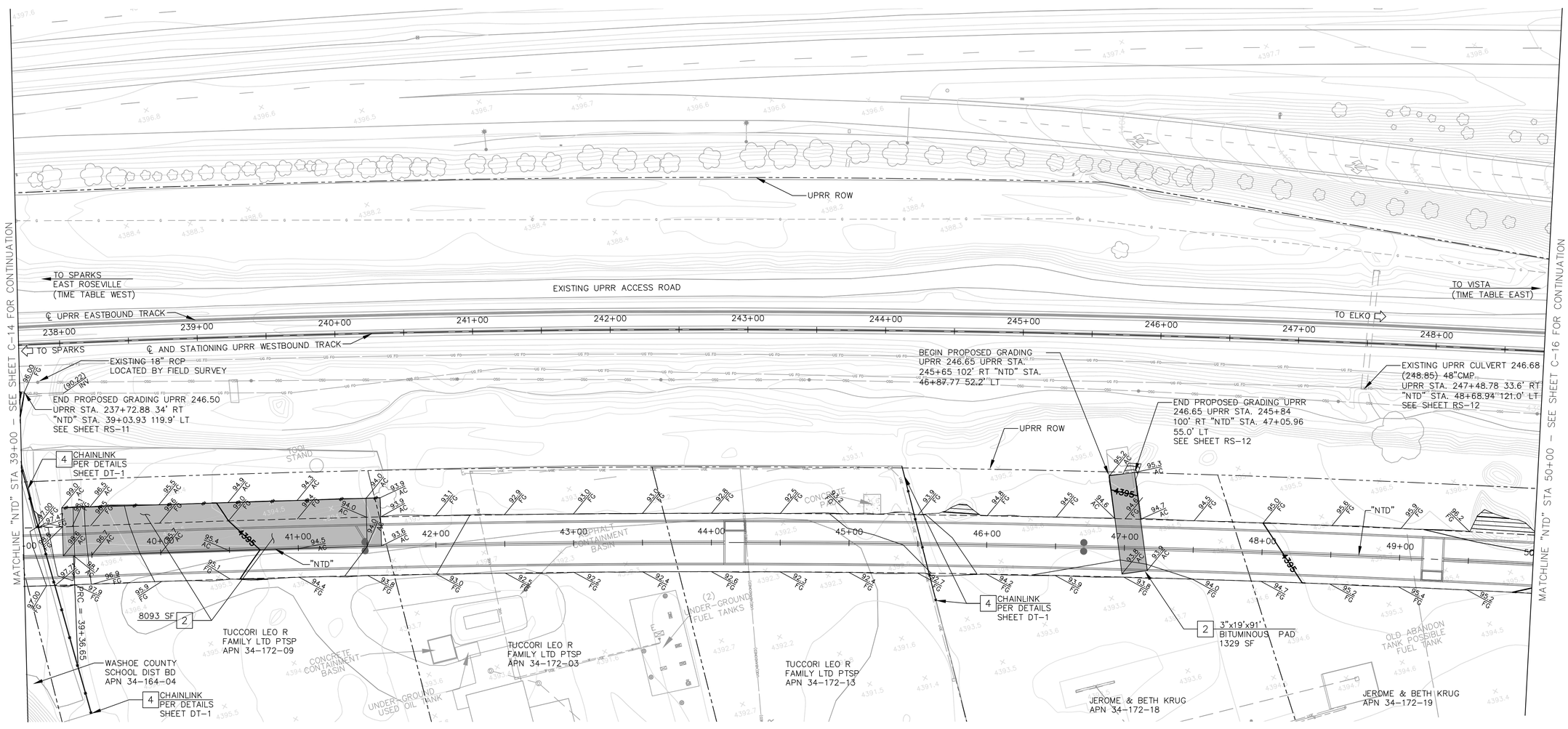

REV No	DATE	DESCRIPTION	APPROVED

DESIGNED BY: PEO
DRAWN BY: PEO
CHECKED BY: NL
APPROVED BY: NL
SCALE
HORIZ: 1"=40'
VERT: N/A
FIELD BOOK

HDR Engineering, Inc.
9805 Double R Blvd.
Suite 101
Reno, NV 89521
Phone: 775-337-4700

City of Sparks

NORTH TRUCKEE DRAIN REALIGNMENT PHASE 3

GRADING PLAN 'NTD' STA 39+00 TO STA 50+00

CITY OF SPARKS, NEVADA, PUBLIC WORKS DEPARTMENT

STATE OF NEVADA
NICOLE L. LAUGHLIN
Exp. 12/31/17
CIVIL
No. 10165
PROFESSIONAL ENGINEER
5/11/16

SHEET No
C-15
SHT OF

C:\pwworking\phx\d0351221\C-12x.dwg 05/02/16 6:52am POXBORRO

GRADING NOTES :

1. CONSTRUCT P.C.C. CURB AND GUTTER. SIZE AND TYPE SHOWN ON PLANS. PER DETAILS SHEET DT-1
2. PLACE PLANTMIX BITUMINOUS PAVEMENT SURFACE. PER TYPICAL SECTIONS, SHEET XS-1.
3. CONSTRUCT TYPE "A" CURB, PER DETAILS SHEET DT-2
4. REPLACE FENCE, TYPE AS SHOWN ON PLAN.
5. CONTRACTOR TO COORDINATE ROCKERY WALL DESIGN WITH VENDOR.
6. CONSTRUCT GRAVEL MAINTENANCE ROAD. PER TYPICAL SECTIONS, SHEET XS-1.

THIS IS A GENERAL LIST. NOT ALL ACTIVITIES ARE USED.

NOTE:

1. **PROTECT EXISTING FEATURES IN PLACE UNLESS NOTED OTHERWISE.**
2. **PROPOSED CONTOURS TIE-IN TO GROUND SURVEY. EXISTING CONTOURS PER AERIAL SURVEY.**
3. **SEE SHEETS HC-1 THRU HC-6 FOR HORIZONTAL CONTROL, SHEETS D-2 THRU D-3 FOR DEMOLITION, SHEETS C-2 THRU C-6 FOR RCB PLAN AND PROFILES, SHEETS C-8 THRU C-11 FOR PARALLEL AND LATERAL STORM DRAIN PLAN AND PROFILES, SHEETS DT-1 THRU DT-7 FOR DETAILS, S-1 THRU S-24 FOR CIVIL STRUCTURAL AND SHEETS R-1 THRU R-10 FOR UPRR STRUCTURAL.**

40 0 40 80
SCALE IN FEET

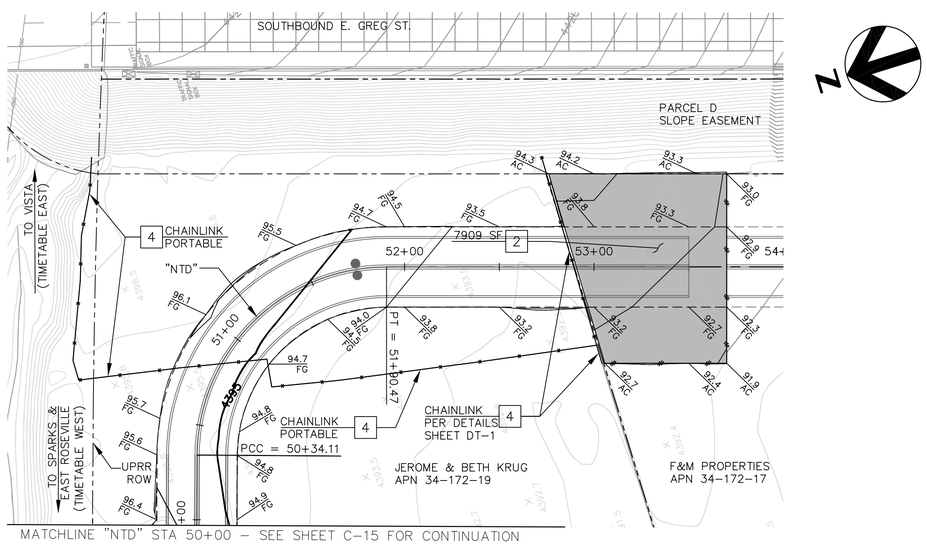

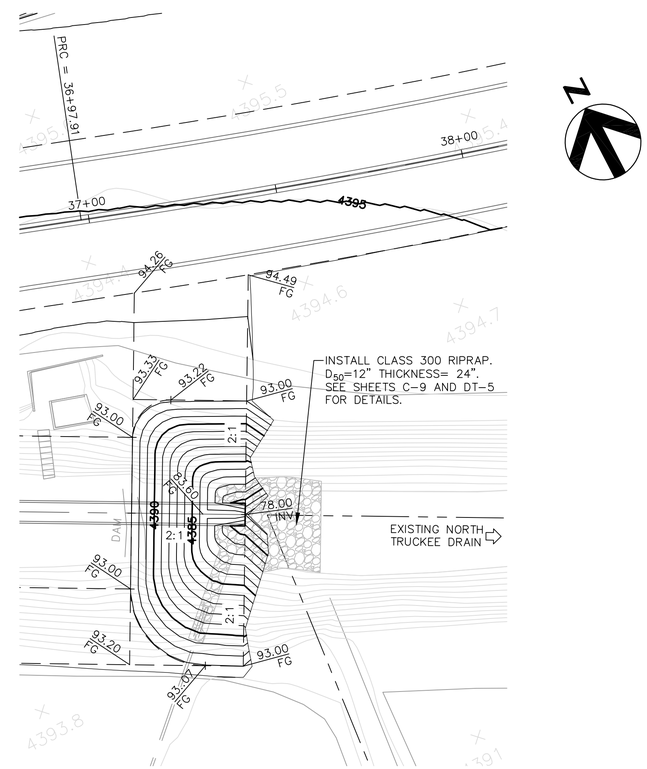

OUTLET RIPRAP AREA FOR
60" RCP PARALLEL STORM DRAIN
"NTD" STA 37+00

REV No	DATE	DESCRIPTION	APPROVED

DESIGNED BY: PEO
DRAWN BY: PEO
CHECKED BY: NL
APPROVED BY: NL
SCALE
HORIZ: 1"=40'
VERT: N/A
FIELD BOOK

HDR Engineering, Inc.
9805 Double R Blvd.
Suite 101
Reno, NV 89521
Phone: 775-337-4700

City of Sparks

NORTH TRUCKEE DRAIN REALIGNMENT PHASE 3

GRADING PLAN 'NTD' STA 50+00 TO STA 54+00 AND RIPRAP AREA 'NTD' STA 37+00

CITY OF SPARKS, NEVADA, PUBLIC WORKS DEPARTMENT

STATE OF NEVADA PROFESSIONAL ENGINEER
NICHOLAS LAUCHUN
Exp. 12/31/17
CIVIL
No. 10169
5/11/16

SHEET No
C-16
SHT OF

C:\pwworking\phx\d0351221\C-12x.dwg 05/02/16 6:52am POXBORRO

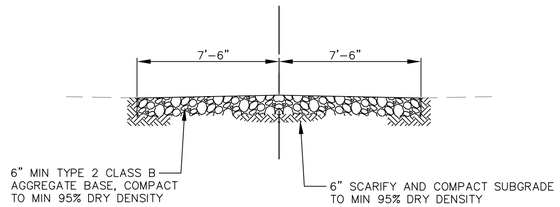

MAINTENANCE ROAD – TYPICAL SECTION

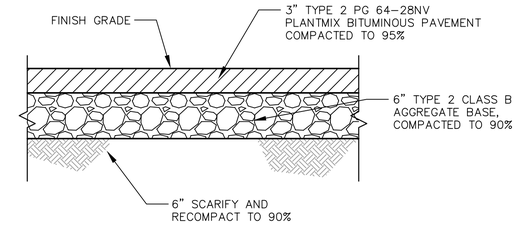

PARKING LOTS AND CONSTRUCTION YARDS – TYPICAL SECTION

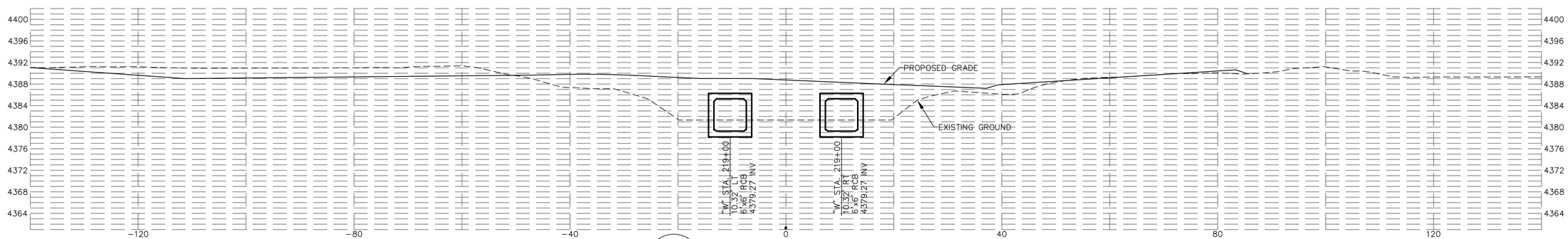

A / C-2 "W" STA. 219+00

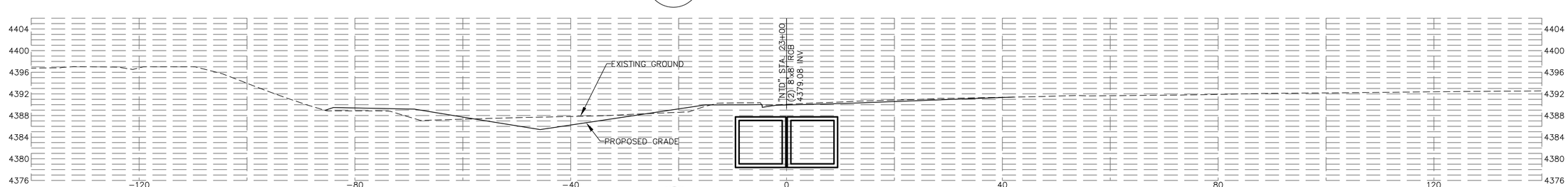

B / C-2 "NTD" STA. 23+00

REV No	DATE	DESCRIPTION	APPROVED

DESIGNED BY: PEO
DRAWN BY: PEO
CHECKED BY: NL
APPROVED BY: NL
SCALE
HORIZ: 1"=10'
VERT: 1"=10'
FIELD BOOK

HDR Engineering, Inc.
9805 Double R Blvd.
Suite 101
Reno, NV 89521
Phone: 775-337-4700

City of Sparks

NORTH TRUCKEE DRAIN REALIGNMENT PHASE 3

TYPICAL ROAD CROSS SECTIONS
"W" AND "NTD" CROSS SECTIONS

CITY OF SPARKS, NEVADA, PUBLIC WORKS DEPARTMENT

STATE OF NEVADA
PROFESSIONAL ENGINEER
NOEL J. POIX
LAUGHLIN
Exp. 12/31/17
CIVIL
No. 10165
5/11/16

SHEET No
XS-1

SHT OF

C:\pwworking\phx\d0351221\XS-01x.dwg 05/02/16 9:28am POXBORRO

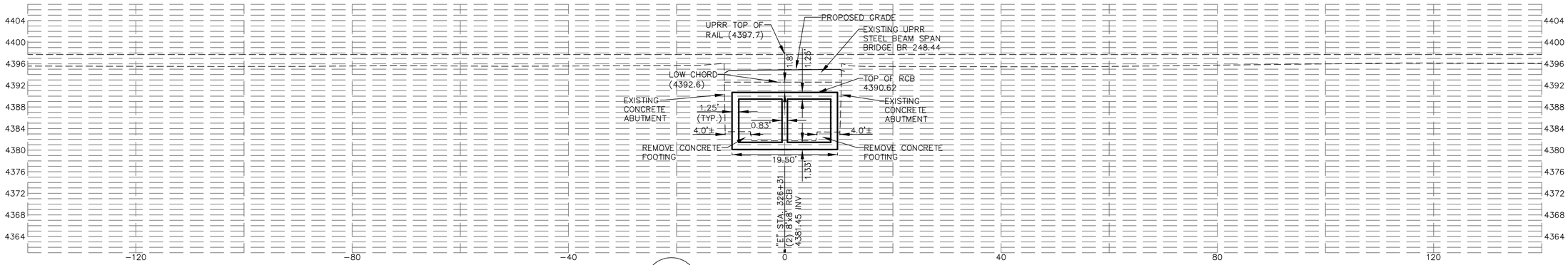

C / C-2 "E" STA. 326+31

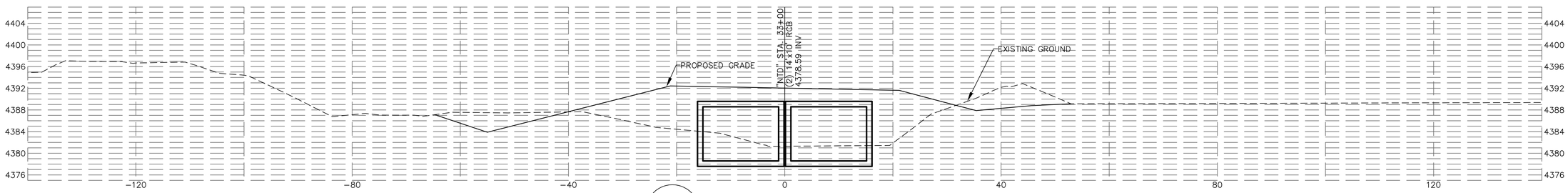

D / C-3 "NTD" STA. 33+00

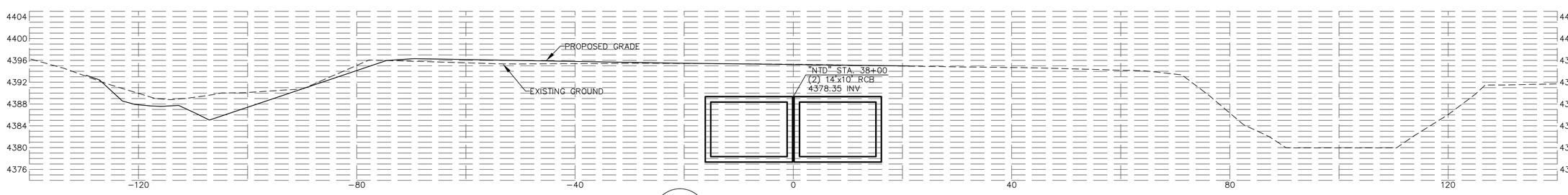

E / C-3 "NTD" STA. 38+00

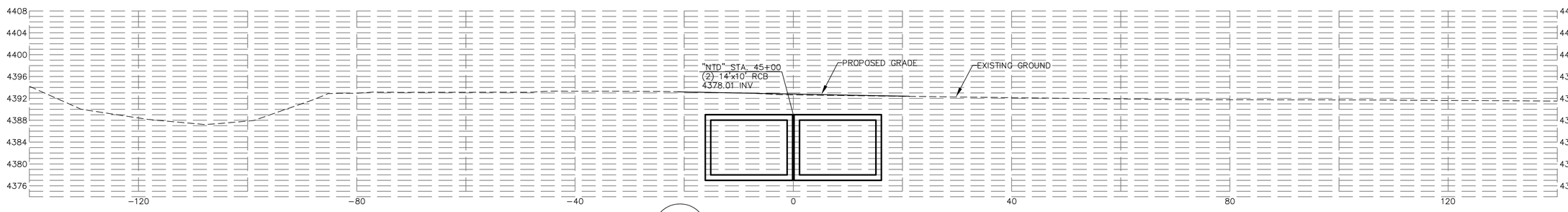

F / C-4 "NTD" STA. 45+00

REV No.	DATE	DESCRIPTION	APPROVED

DESIGNED BY: PEO
DRAWN BY: PEO
CHECKED BY: NL
APPROVED BY: NL
SCALE
HORIZ: 1"=10'
VERT: 1"=10'
FIELD BOOK

HDR Engineering, Inc.
9805 Double R Blvd.
Suite 101
Reno, NV 89521
Phone: 775-337-4700

City of Sparks

NORTH TRUCKEE DRAIN REALIGNMENT PHASE 3

"E" AND "NTD" CROSS SECTIONS

CITY OF SPARKS, NEVADA, PUBLIC WORKS DEPARTMENT

STATE OF NEVADA
PROFESSIONAL ENGINEER
NEIL E. LAUGHLIN
Exp. 12/31/17
CIVIL
No. 10165
5/11/16

SHEET No
XS-2

SHT OF

C:\pwworking\phx\d0351221\XS-01x.dwg 05/02/16 9:29am POXBORRO

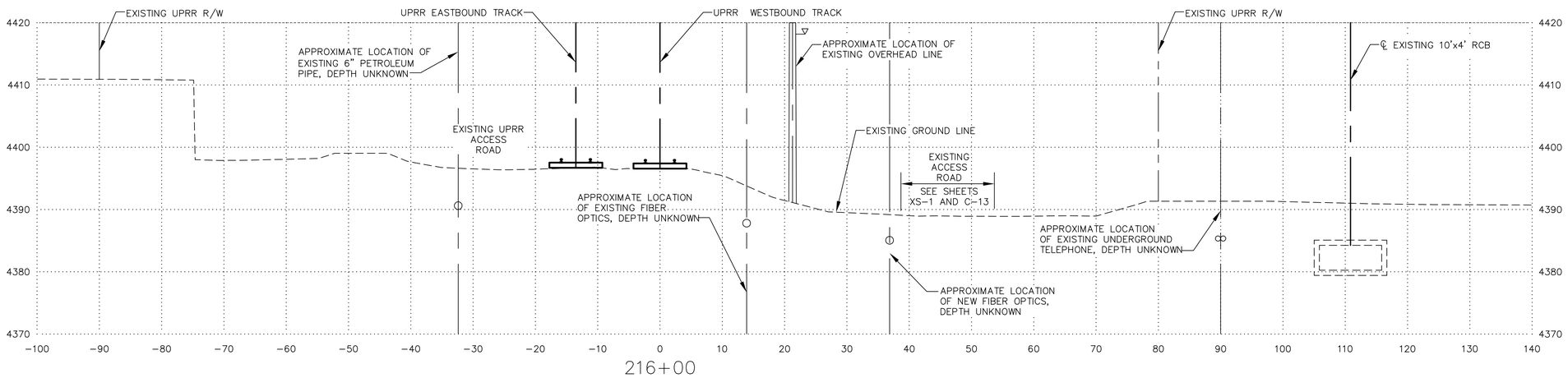

216+00

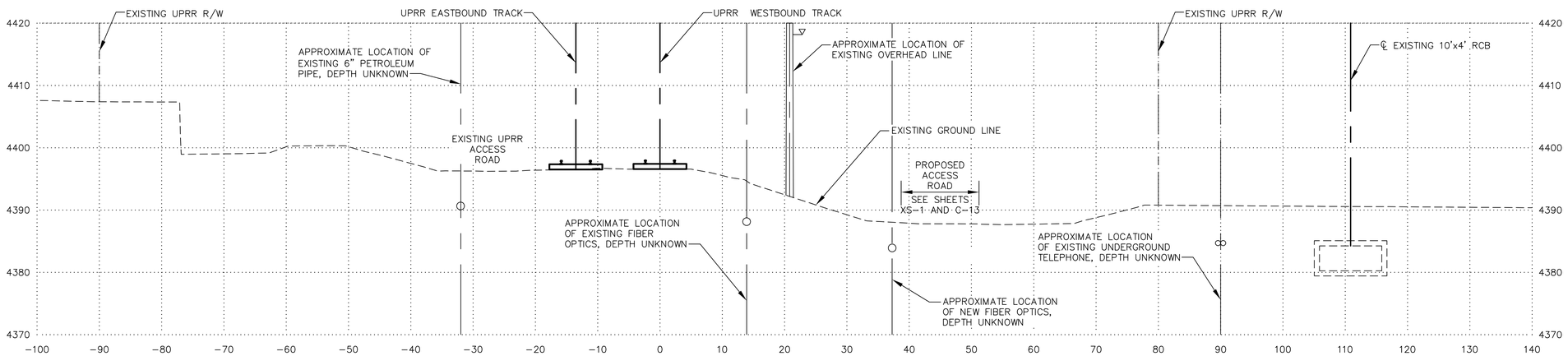

216+71.70

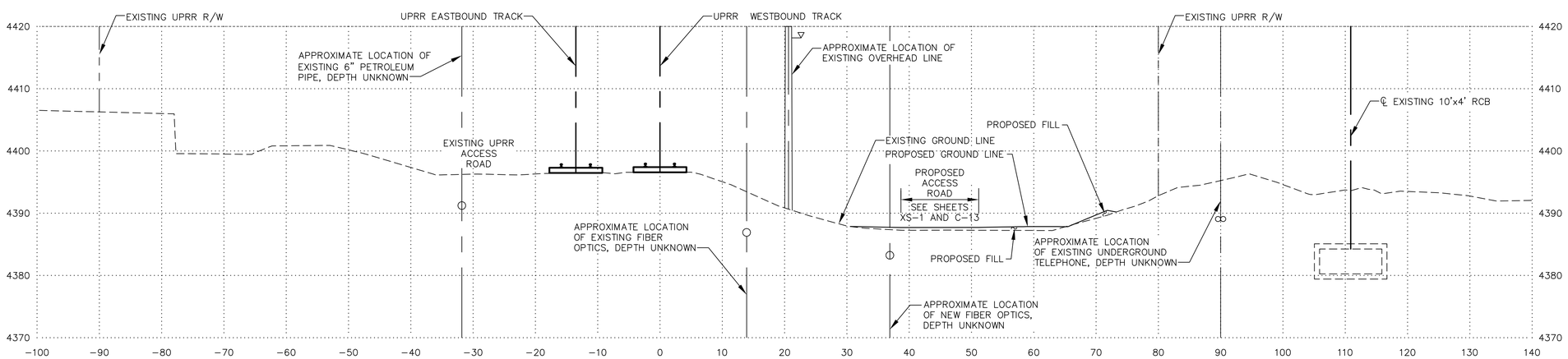

217+00

REV No	DATE	DESCRIPTION	APPROVED

DESIGNED BY: PEO
DRAWN BY: PEO
CHECKED BY: NL
APPROVED BY:
SCALE
HORIZ: 1"=10'
VERT: 1"=10'
FIELD BOOK

HDR Engineering, Inc.
9805 Double R Blvd.
Suite 101
Reno, NV 89521
Phone: 775-337-4700

City of Sparks

NORTH TRUCKEE DRAIN REALIGNMENT PHASE 3

UPRR CROSS SECTIONS
UPRR STA 216+00.00 TO STA 217+00.00

CITY OF SPARKS, NEVADA, PUBLIC WORKS DEPARTMENT

STATE OF NEVADA
PROFESSIONAL ENGINEER
NICHOLAS LAUGHLIN
Exp. 12/31/17
CIVIL
No. 10169
5/11/16

SHEET No
RS-1

SHT OF

C:\pwworking\phx\d0351221\RS-01x.dwg 05/02/16 9:14am POXBORRO

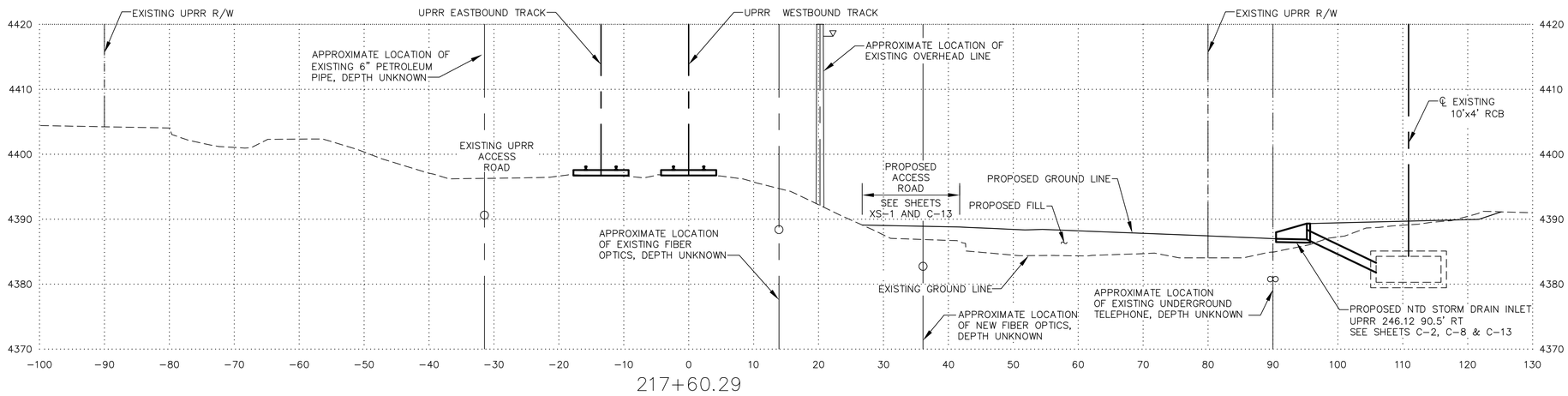

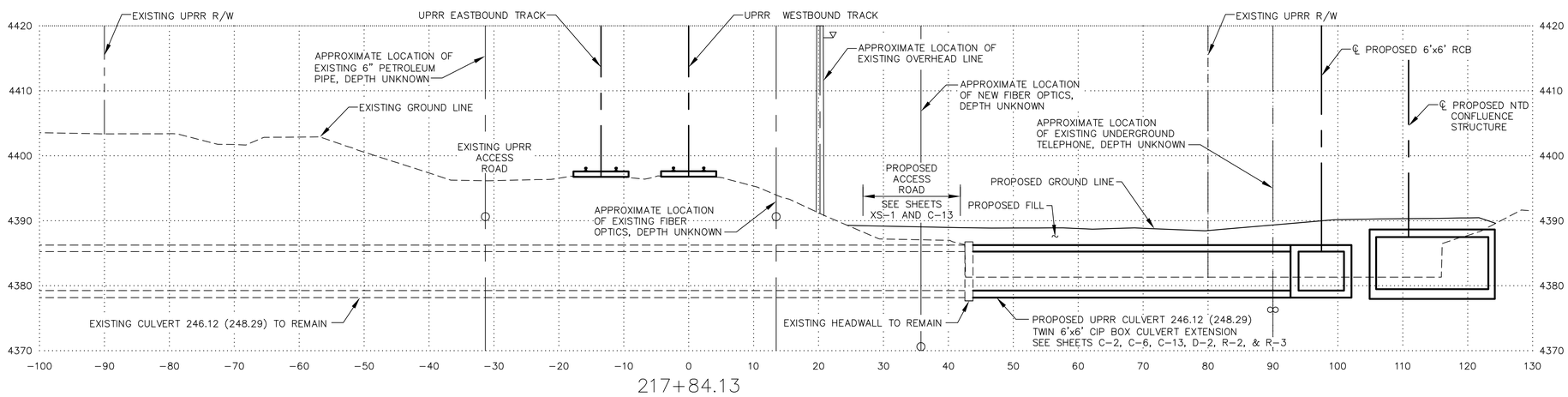

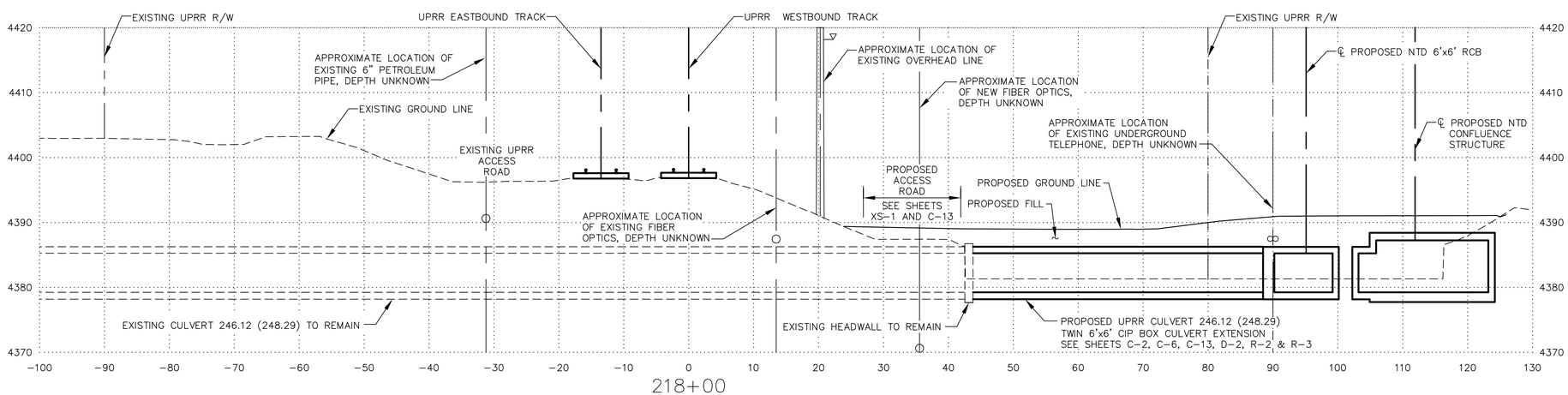

REV No	DATE	DESCRIPTION	APPROVED

DESIGNED BY: PEO
DRAWN BY: PEO
CHECKED BY: NL
APPROVED BY:
SCALE
HORIZ: 1"=10'
VERT: 1"=10'
FIELD BOOK

HDR Engineering, Inc.
9805 Double R Blvd.
Suite 101
Reno, NV 89521
Phone: 775-337-4700

City of Sparks

NORTH TRUCKEE DRAIN REALIGNMENT PHASE 3

UPRR CROSS SECTIONS
UPRR STA 217+60.29 TO STA 218+00.00

CITY OF SPARKS, NEVADA, PUBLIC WORKS DEPARTMENT

STATE OF NEVADA
NOEL LAUGHLIN
Exp. 12/31/17
CIVIL
No. 10165
PROFESSIONAL ENGINEER
5/11/16

SHEET No
RS-2

SHT OF

C:\pwworking\phx\d0351221\RS-01x.dwg 05/02/16 9:14am POXBORRO

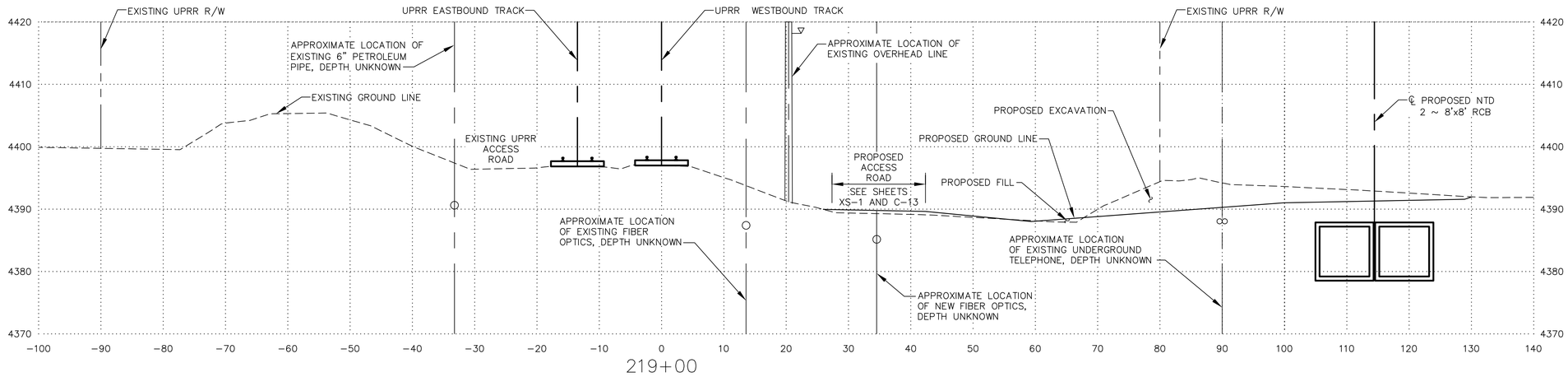

219+00

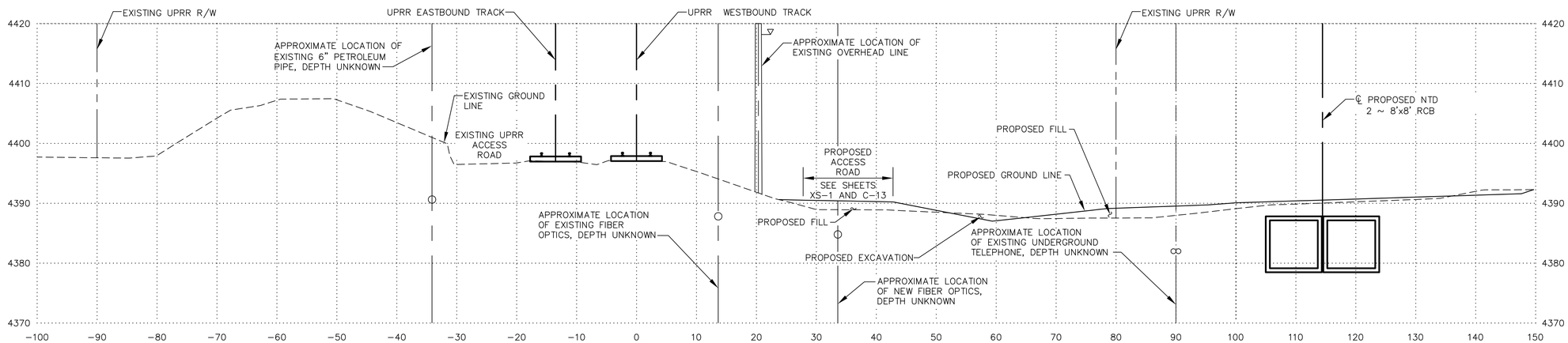

220+00

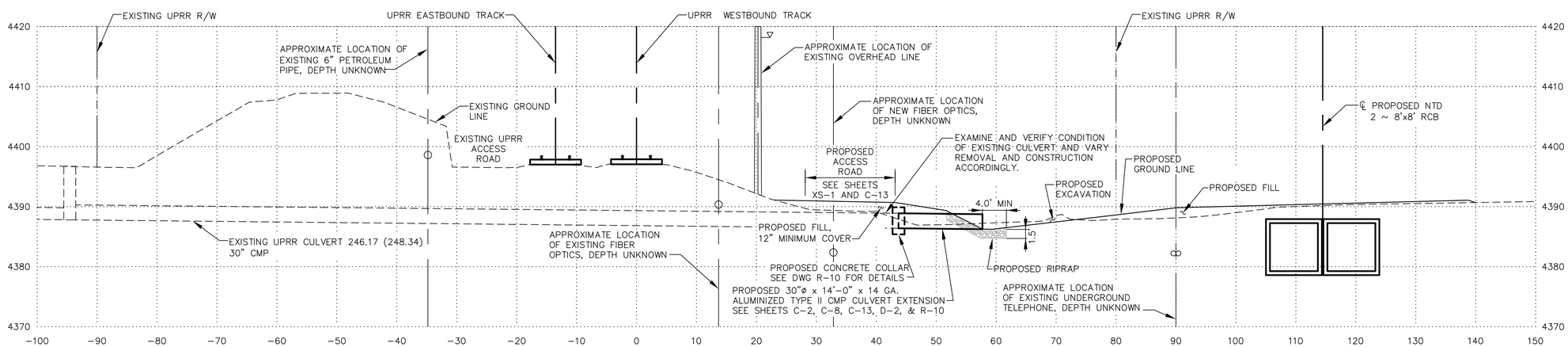

220+78.22

REV No	DATE	DESCRIPTION	APPROVED

DESIGNED BY: PEO
DRAWN BY: PEO
CHECKED BY: NL
APPROVED BY:
SCALE
HORIZ: 1"=10'
VERT: 1"=10'
FIELD BOOK

HDR Engineering, Inc.
9805 Double R Blvd.
Suite 101
Reno, NV 89521
Phone: 775-337-4700

City of Sparks

NORTH TRUCKEE DRAIN REALIGNMENT PHASE 3

UPRR CROSS SECTIONS
UPRR STA 219+00.00 TO STA 220+78.22

CITY OF SPARKS, NEVADA, PUBLIC WORKS DEPARTMENT

STATE OF NEVADA PROFESSIONAL ENGINEER NICHOLAS LAUGHLIN Exp. 12/31/17 CIVIL No. 10167

5/11/16

SHEET No
RS-3

SHT OF

C:\pwworking\phx\d0351221\RS-01x.dwg 05/02/16 9:14am POXBORRO

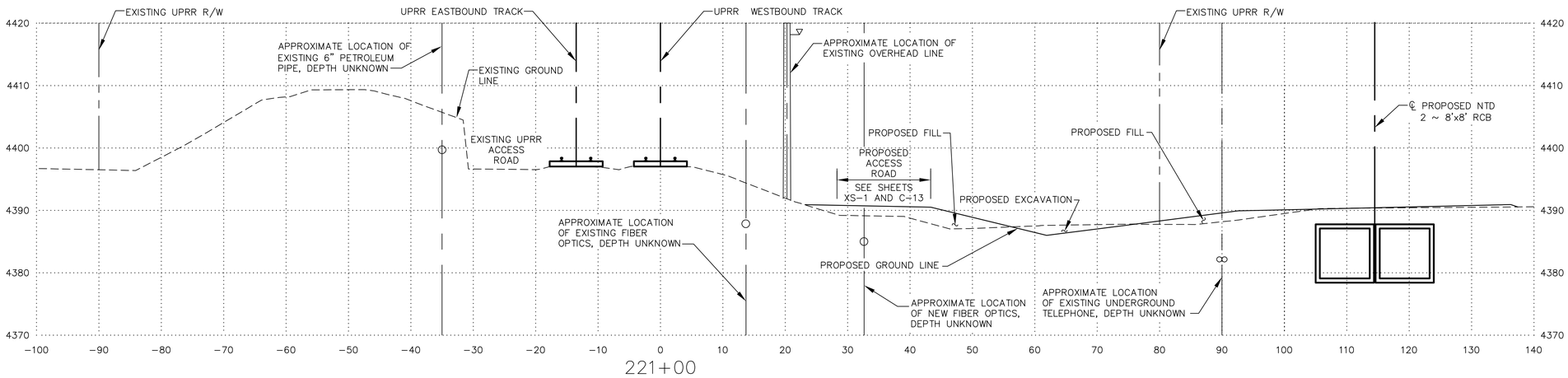

221+00

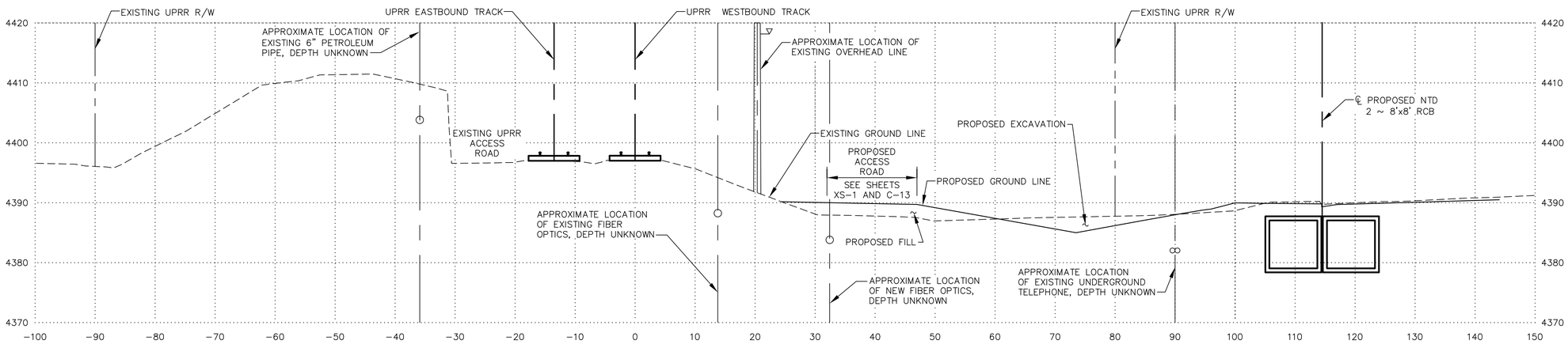

222+00

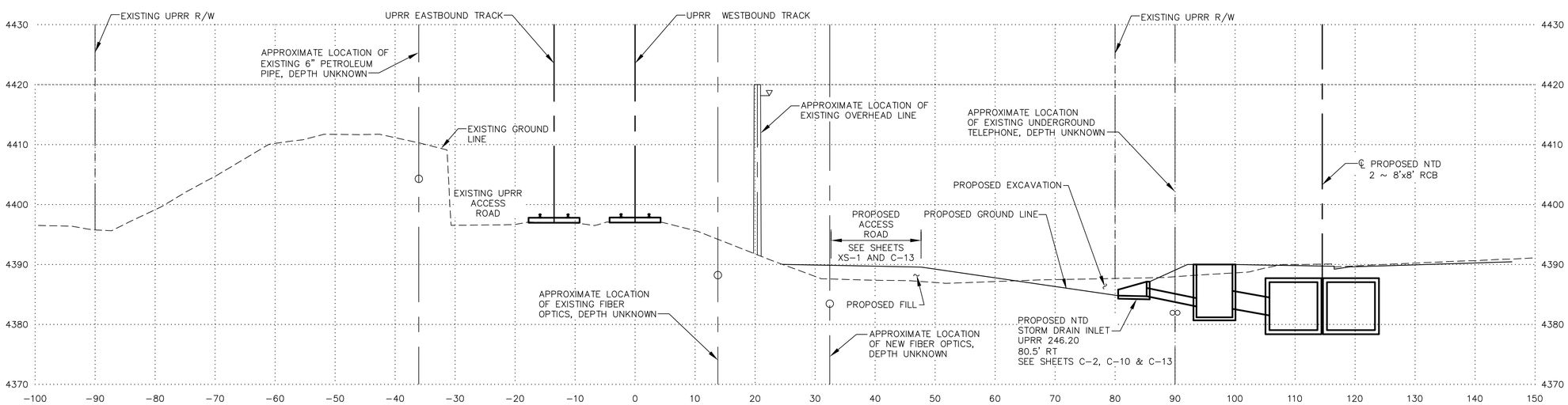

222+18.53

REV No.	DATE	DESCRIPTION	APPROVED

DESIGNED BY: PEO
DRAWN BY: PEO
CHECKED BY: NL
APPROVED BY:
SCALE
HORIZ: 1"=10'
VERT: 1"=10'
FIELD BOOK

HDR Engineering, Inc.
9805 Double R Blvd.
Suite 101
Reno, NV 89521
Phone: 775-337-4700

City of Sparks

NORTH TRUCKEE DRAIN REALIGNMENT PHASE 3

UPRR CROSS SECTIONS
UPRR STA 221+00.00 TO STA 222+18.53

CITY OF SPARKS, NEVADA, PUBLIC WORKS DEPARTMENT

STATE OF NEVADA
NICK LAUCHLIN
Exp. 12/31/17
CIVIL
No. 10168
PROFESSIONAL ENGINEER
5/11/16

SHEET No
RS-4

SHT OF

C:\pwworking\phx\d0351221\RS-01x.dwg 05/02/16 9:14am POXBORRO

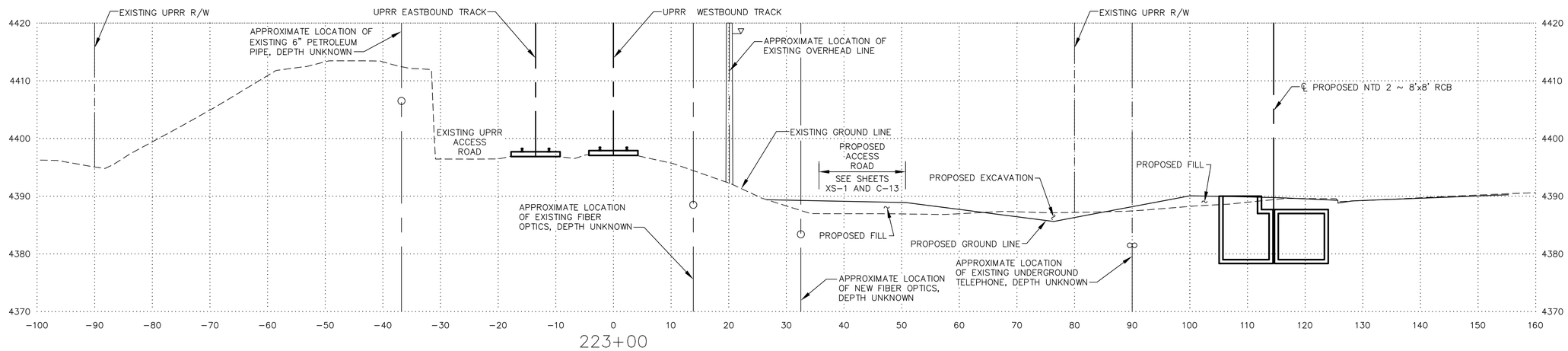

223+00

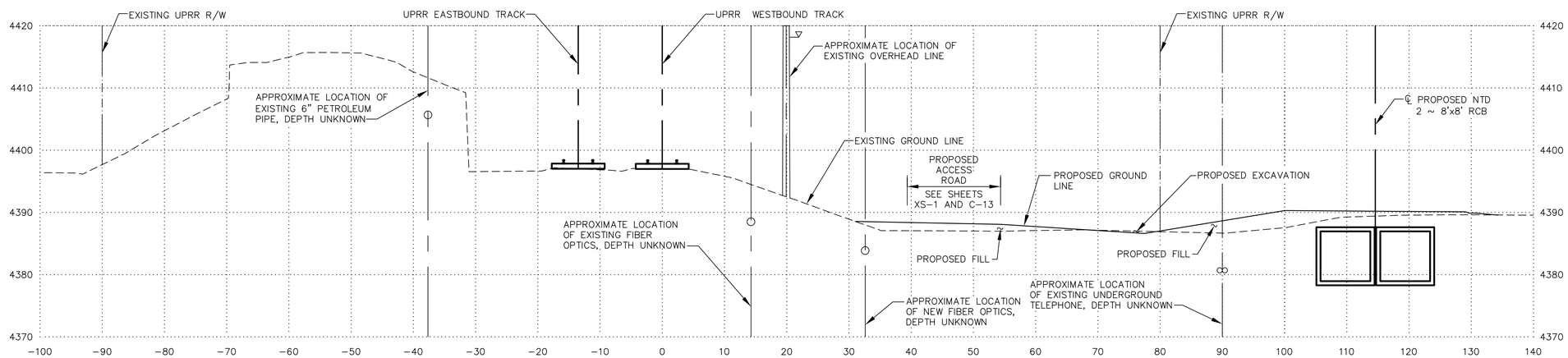

224+00

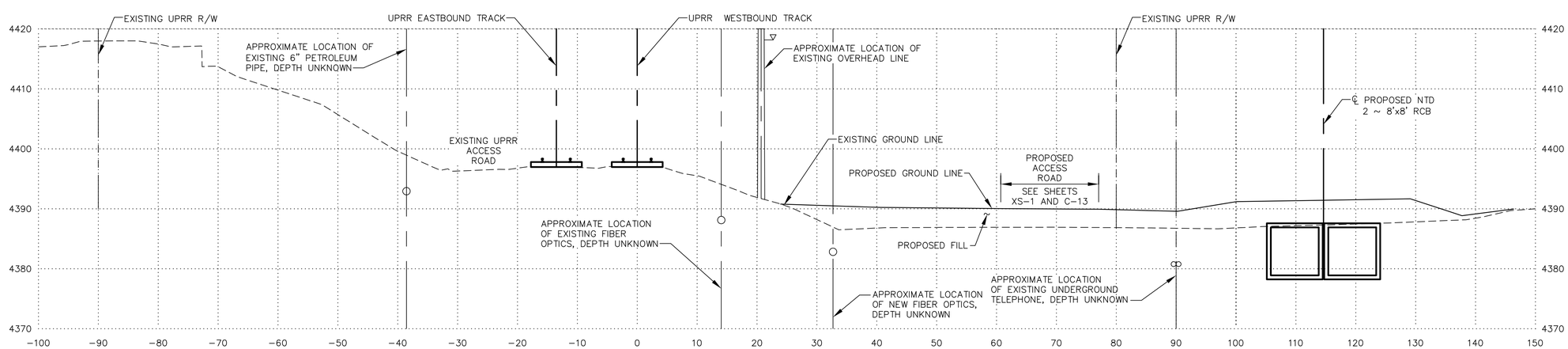

225+00

REV No	DATE	DESCRIPTION	APPROVED

DESIGNED BY: PEO
DRAWN BY: PEO
CHECKED BY: NL
APPROVED BY:
SCALE
HORIZ: 1"=10'
VERT: 1"=10'
FIELD BOOK

HDR
HDR Engineering, Inc.
9805 Double R Blvd.
Suite 101
Reno, NV 89521
Phone: 775-337-4700

City of Sparks

NORTH TRUCKEE DRAIN REALIGNMENT PHASE 3

UPRR CROSS SECTIONS
UPRR STA 223+00.00 TO STA 225+00.00

CITY OF SPARKS, NEVADA, PUBLIC WORKS DEPARTMENT

STATE OF NEVADA
PROFESSIONAL ENGINEER
NOEL H. LAUGHLIN
Exp. 12/31/17
CIVIL
No. 10165
5/11/16

SHEET No
RS-5

SHT OF

C:\pwworking\phx\d0351221\RS-01x.dwg 05/02/16 9:14am POXBORRO

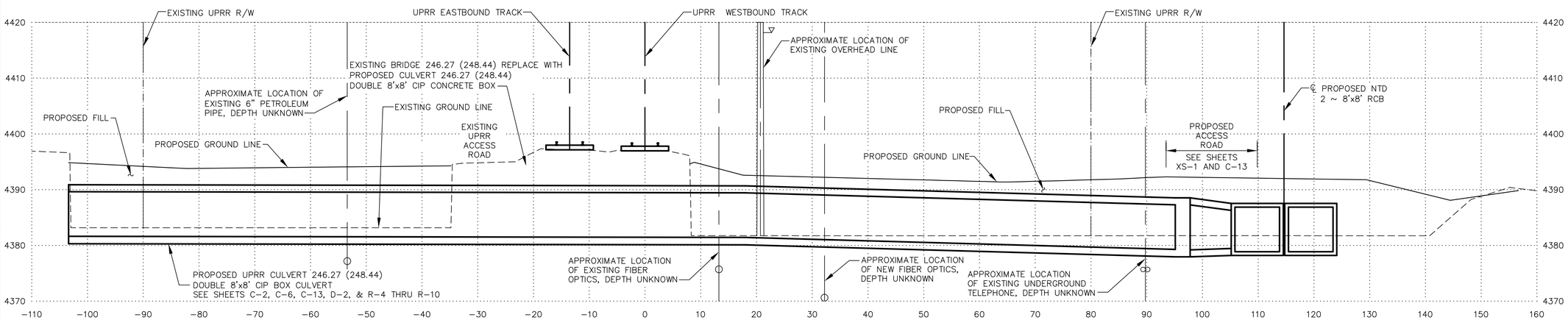

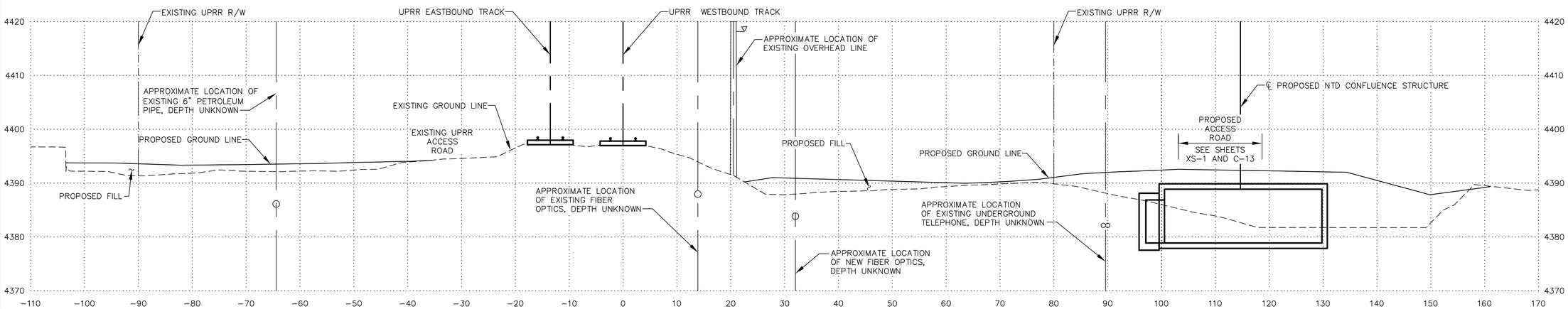

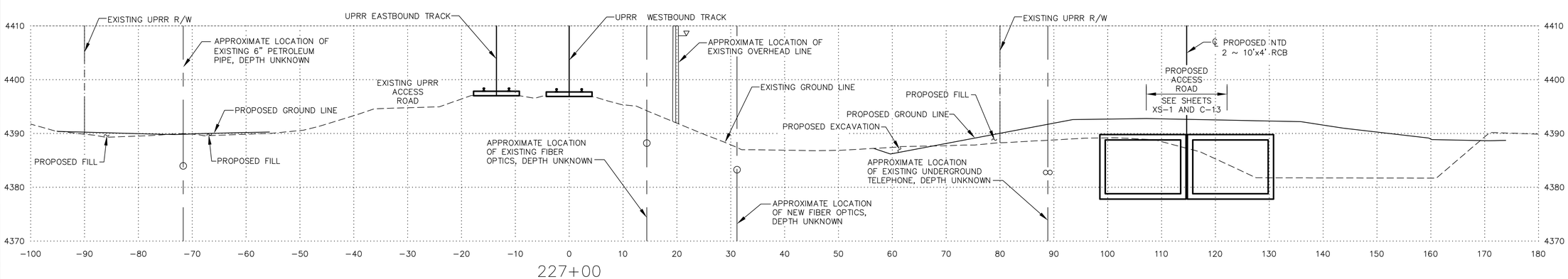

REV No	DATE	DESCRIPTION	APPROVED

DESIGNED BY: PEO
DRAWN BY: PEO
CHECKED BY: NL
APPROVED BY:
SCALE
HORIZ: 1"=10'
VERT: 1"=10'
FIELD BOOK

HDR Engineering, Inc.
9805 Double R Blvd.
Suite 101
Reno, NV 89521
Phone: 775-337-4700

City of Sparks

NORTH TRUCKEE DRAIN REALIGNMENT PHASE 3

UPRR CROSS SECTIONS
UPRR STA 225+75.86 TO STA 227+00.00

CITY OF SPARKS, NEVADA, PUBLIC WORKS DEPARTMENT

STATE OF NEVADA
NOEL W. LAUGHLIN
Exp. 12/31/17
CIVIL
PROFESSIONAL ENGINEER
No. 10165
5/11/16

SHEET No
RS-6

SHT OF

C:\pwworking\phx\d0351221\RS-01x.dwg 05/02/16 9:14am POXBORRO

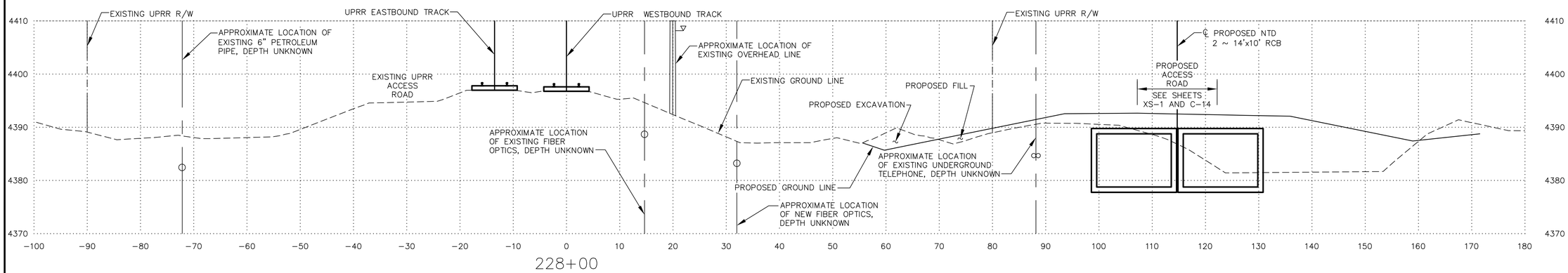

228+00

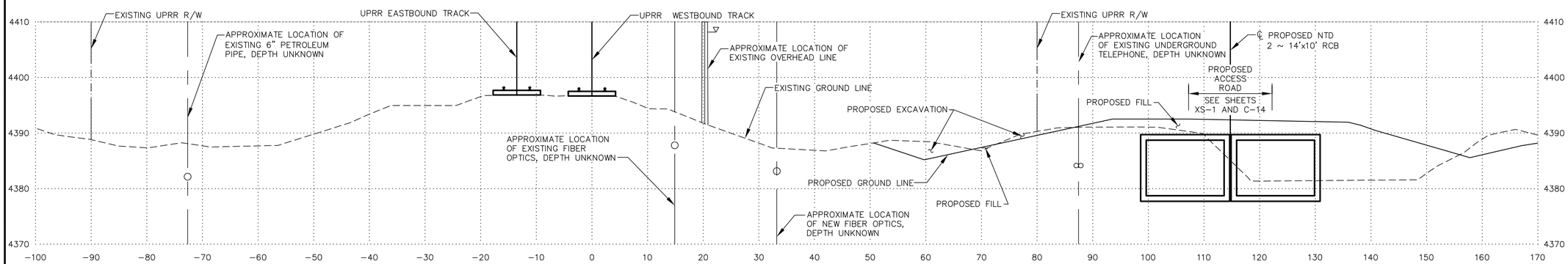

229+00

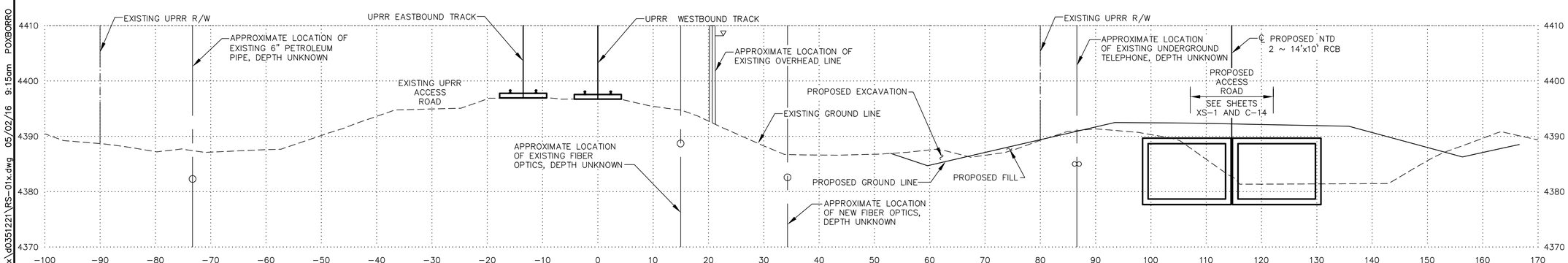

230+00

REV No.	DATE	DESCRIPTION	APPROVED

DESIGNED BY: PEO
DRAWN BY: PEO
CHECKED BY: NL
APPROVED BY:
SCALE
HORIZ: 1"=10'
VERT: 1"=10'
FIELD BOOK

HDR Engineering, Inc.
9805 Double R Blvd.
Suite 101
Reno, NV 89521
Phone: 775-337-4700

City of Sparks

NORTH TRUCKEE DRAIN REALIGNMENT PHASE 3

UPRR CROSS SECTIONS
UPRR STA 228+00.00 TO STA 230+00.00

CITY OF SPARKS, NEVADA, PUBLIC WORKS DEPARTMENT

STATE OF NEVADA
NIGEL LAUGHLIN
Exp. 12/31/17
CIVIL
PROFESSIONAL ENGINEER No. 10169
5/11/16

SHEET No
RS-7

SHT OF

C:\pwworking\phx\d0351221\RS-01x.dwg 05/02/16 9:15am POXBORRO

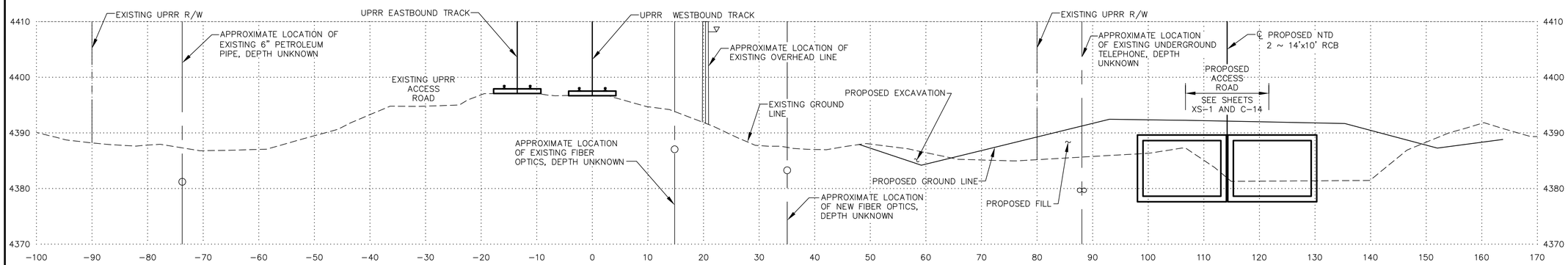

231+00

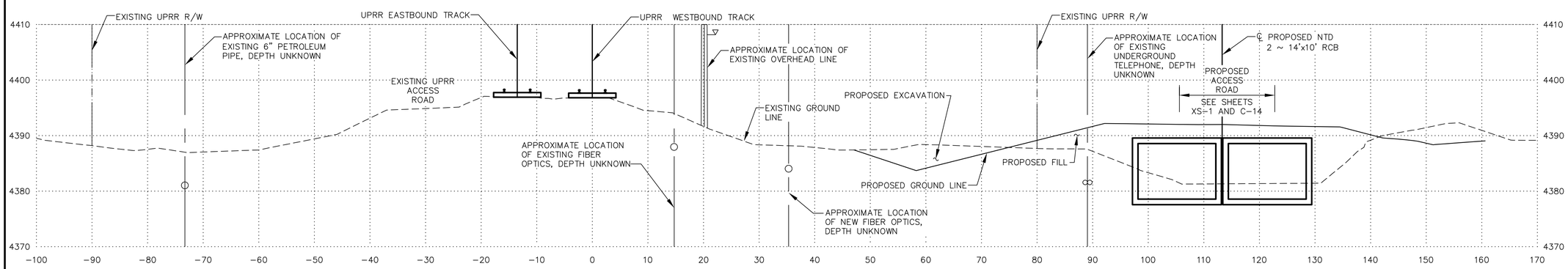

232+00

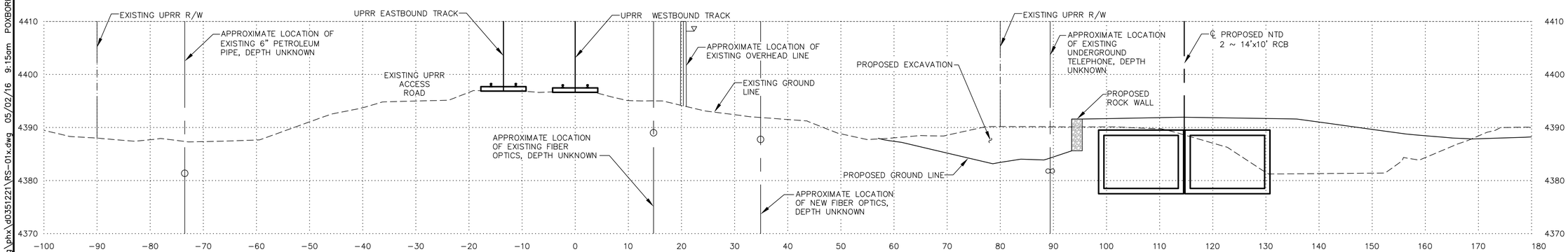

233+00

REV No	DATE	DESCRIPTION	APPROVED

DESIGNED BY: PEO
DRAWN BY: PEO
CHECKED BY: NL
APPROVED BY:
SCALE
HORIZ: 1"=10'
VERT: 1"=10'
FIELD BOOK

HDR Engineering, Inc.
9805 Double R Blvd.
Suite 101
Reno, NV 89521
Phone: 775-337-4700

City of Sparks

NORTH TRUCKEE DRAIN REALIGNMENT PHASE 3

UPRR CROSS SECTIONS
UPRR STA 231+00.00 TO STA 233+00.00

CITY OF SPARKS, NEVADA, PUBLIC WORKS DEPARTMENT

STATE OF NEVADA
PROFESSIONAL ENGINEER
NICK LAUGHLIN
Exp. 12/31/17
CIVIL
No. 10165
5/11/16

SHEET No
RS-8

SHT OF

C:\pwworking\phx\d0351221\RS-01x.dwg 05/02/16 9:15am POXBORRO

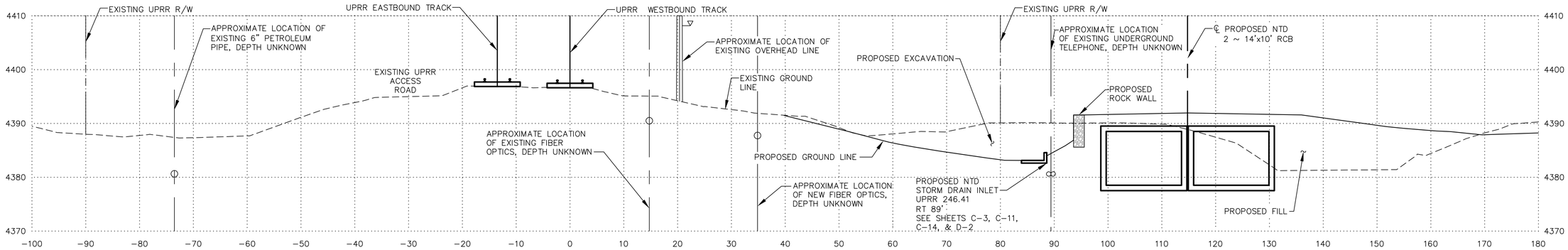

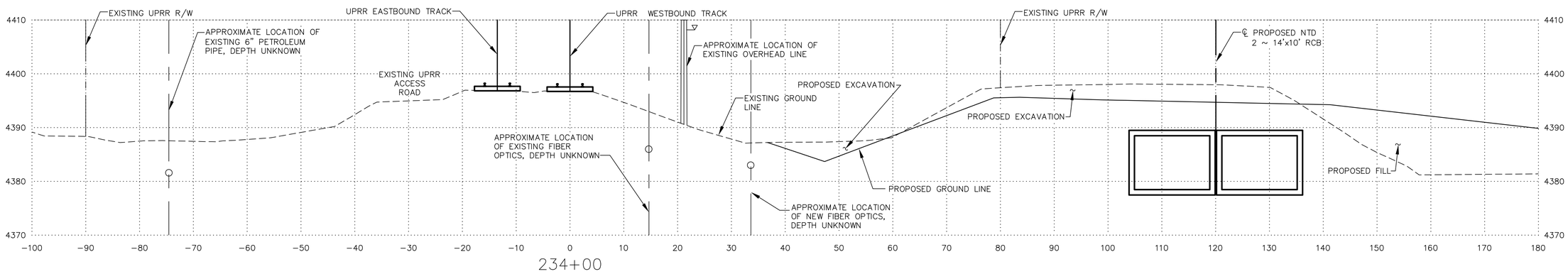

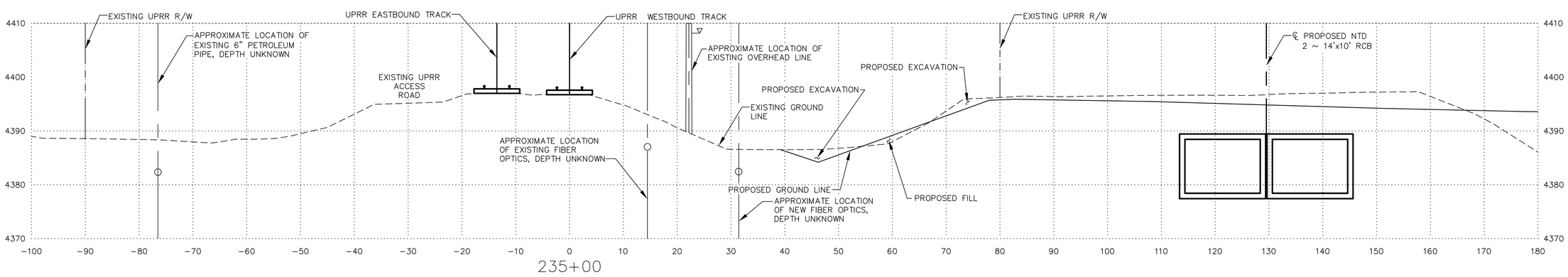

REV No.	DATE	DESCRIPTION	APPROVED

DESIGNED BY: PEO
DRAWN BY: PEO
CHECKED BY: NL
APPROVED BY:
SCALE
HORIZ: 1"=10'
VERT: 1"=10'
FIELD BOOK

HDR Engineering, Inc.
9805 Double R Blvd.
Suite 101
Reno, NV 89521
Phone: 775-337-4700

City of Sparks

NORTH TRUCKEE DRAIN REALIGNMENT PHASE 3

UPRR CROSS SECTIONS
UPRR STA 233+04.13 TO STA 235+00.00

CITY OF SPARKS, NEVADA, PUBLIC WORKS DEPARTMENT

STATE OF NEVADA PROFESSIONAL ENGINEER NOEL A. LAUGHLIN Exp. 12/31/17 CIVIL No. 10165 5/11/16

SHEET No
RS-9

SHT OF

C:\pwworking\phx\d0351221\RS-01x.dwg 05/02/16 9:15am POXBORRO

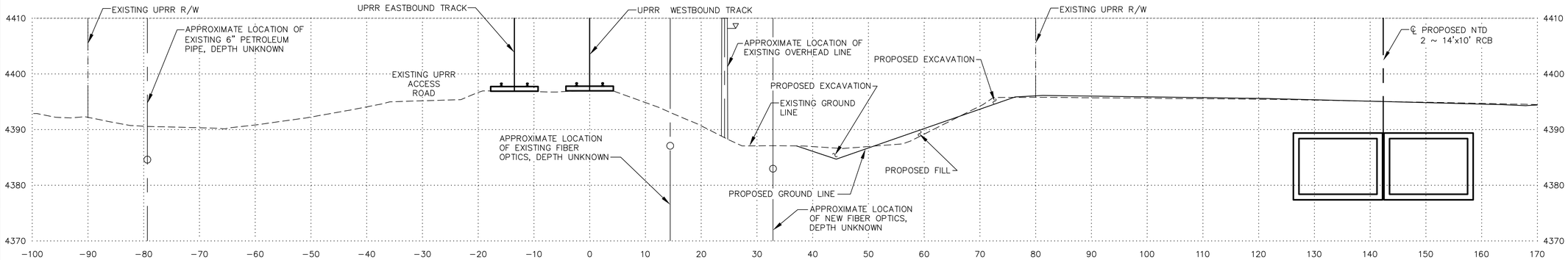

236+00

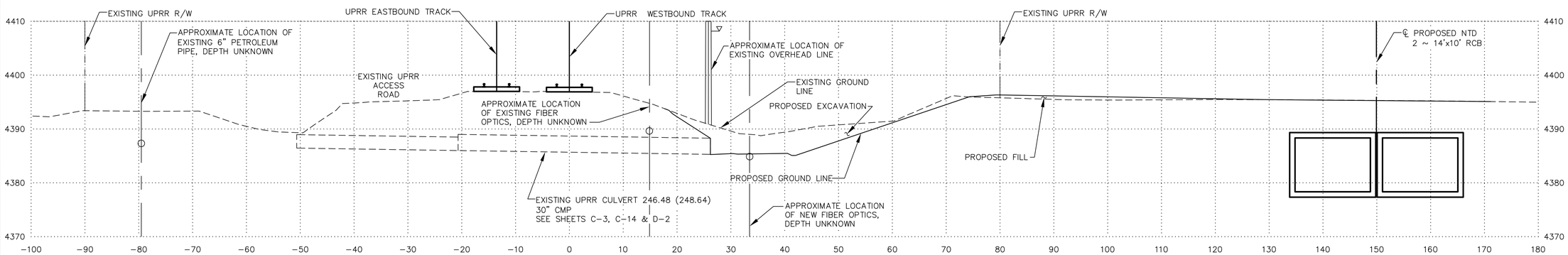

236+79.48

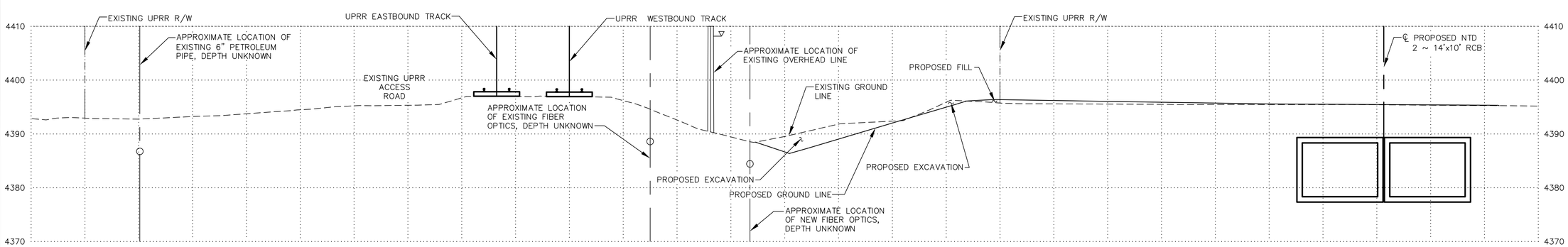

237+00

REV No	DATE	DESCRIPTION	APPROVED

DESIGNED BY: PEO
DRAWN BY: PEO
CHECKED BY: NL
APPROVED BY:
SCALE
HORIZ: 1"=10'
VERT: 1"=10'
FIELD BOOK

HDR Engineering, Inc.
9805 Double R Blvd.
Suite 101
Reno, NV 89521
Phone: 775-337-4700

City of Sparks

NORTH TRUCKEE DRAIN REALIGNMENT PHASE 3

UPRR CROSS SECTIONS
UPRR STA 236+00.00 TO STA 237+00.00

CITY OF SPARKS, NEVADA, PUBLIC WORKS DEPARTMENT

STATE OF NEVADA
NOEL LAUGHLIN
Exp. 12/31/17
CIVIL
No. 10165
PROFESSIONAL ENGINEER
5/11/16

SHEET No
RS-10

SHT OF

C:\pwworking\phx\d0351221\RS-01x.dwg 05/02/16 9:15am POXBORRO

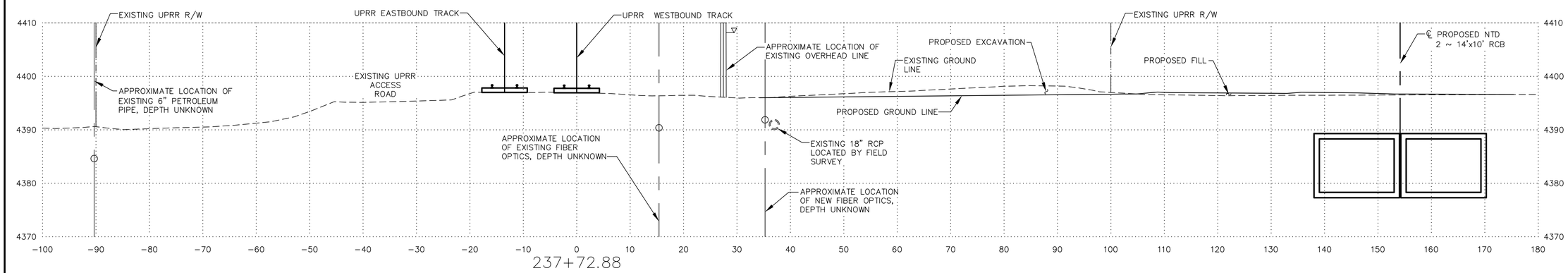

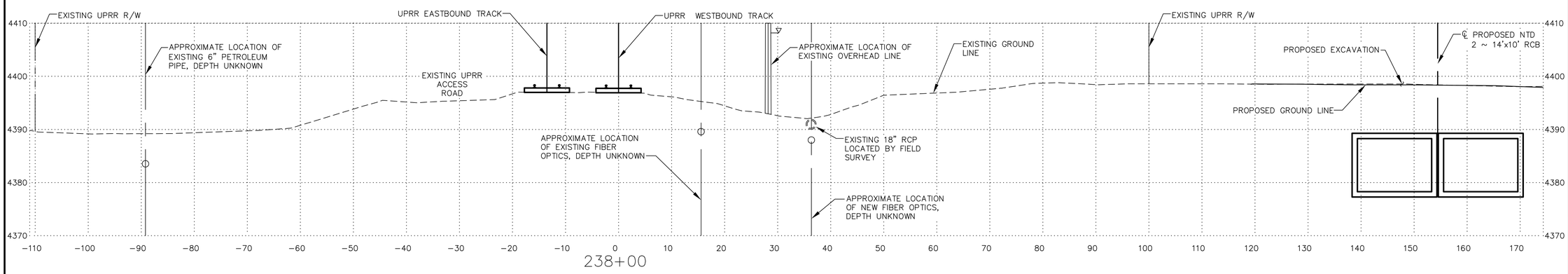

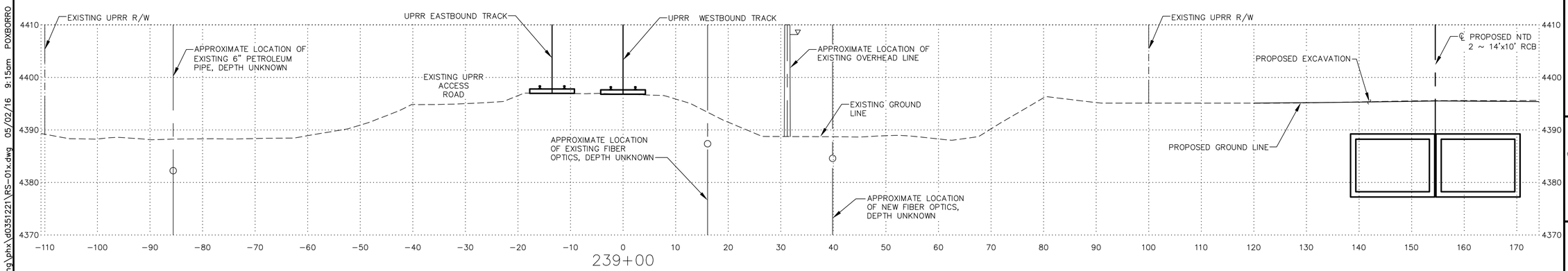

REV No	DATE	DESCRIPTION	APPROVED

DESIGNED BY: PEO
DRAWN BY: PEO
CHECKED BY: NL
APPROVED BY:
SCALE
HORIZ: 1"=10'
VERT: 1"=10'
FIELD BOOK

HDR Engineering, Inc.
9805 Double R Blvd.
Suite 101
Reno, NV 89521
Phone: 775-337-4700

City of Sparks

NORTH TRUCKEE DRAIN REALIGNMENT PHASE 3

UPRR CROSS SECTIONS
UPRR STA 237+72.88 TO STA 239+00.00

CITY OF SPARKS, NEVADA, PUBLIC WORKS DEPARTMENT

STATE OF NEVADA
PROFESSIONAL ENGINEER
NICK LAUCHLIN
Exp. 12/31/17
CIVIL
No. 10169
5/11/16

SHEET No
RS-11

SHT OF

C:\pwworking\phx\d0351221\RS-01x.dwg 05/02/16 9:15am POXBORRO

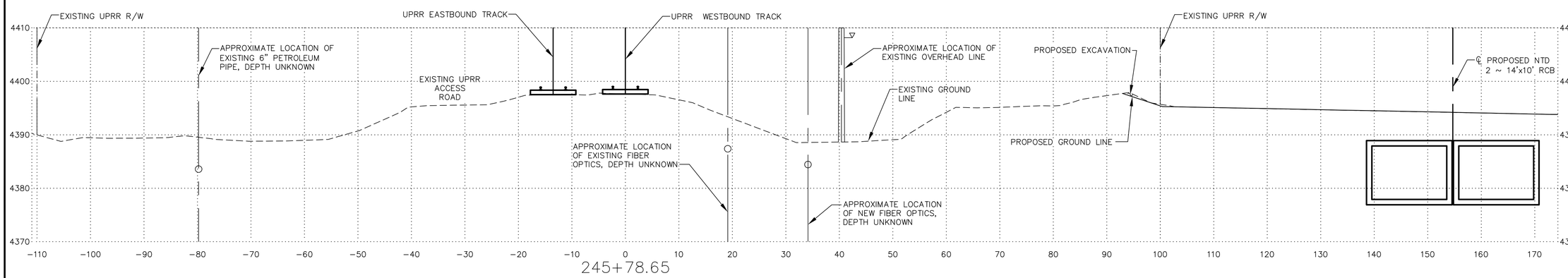

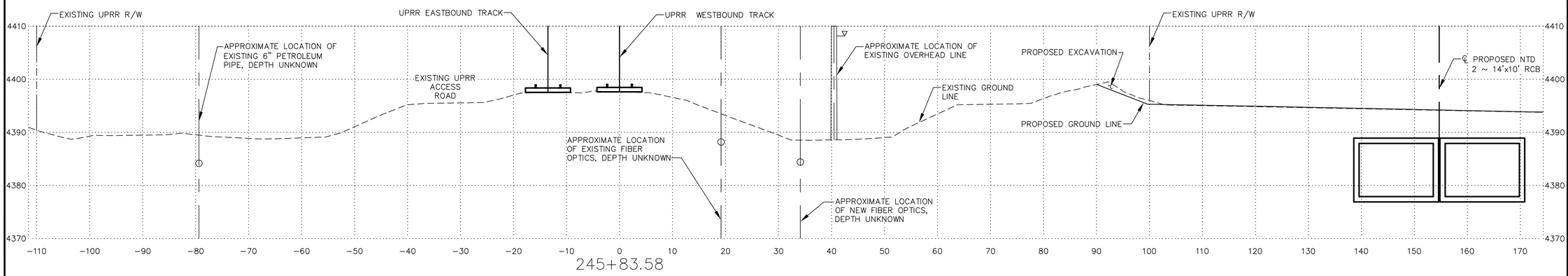

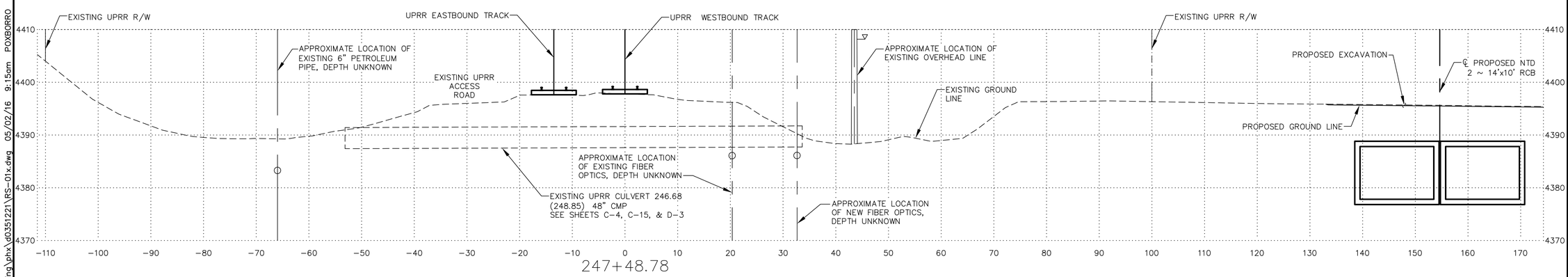

REV No	DATE	DESCRIPTION	APPROVED

DESIGNED BY: PEO
DRAWN BY: PEO
CHECKED BY: NL
APPROVED BY:
SCALE
HORIZ: 1"=10'
VERT: 1"=10'
FIELD BOOK

HDR Engineering, Inc.
9805 Double R Blvd.
Suite 101
Reno, NV 89521
Phone: 775-337-4700

City of Sparks

NORTH TRUCKEE DRAIN REALIGNMENT PHASE 3

UPRR CROSS SECTIONS
UPRR STA 245+78.65 TO STA 247+48.78

CITY OF SPARKS, NEVADA, PUBLIC WORKS DEPARTMENT

STATE OF NEVADA
PROFESSIONAL ENGINEER
No. 10165
LAUGHLIN
Exp. 12/31/17
CIVIL
5/11/16

SHEET No
RS-12

SHT OF

C:\pwworking\phx\d0351221\RS-01x.dwg 05/02/16 9:15am POXBORRO

4 | 3 | 2 | 1

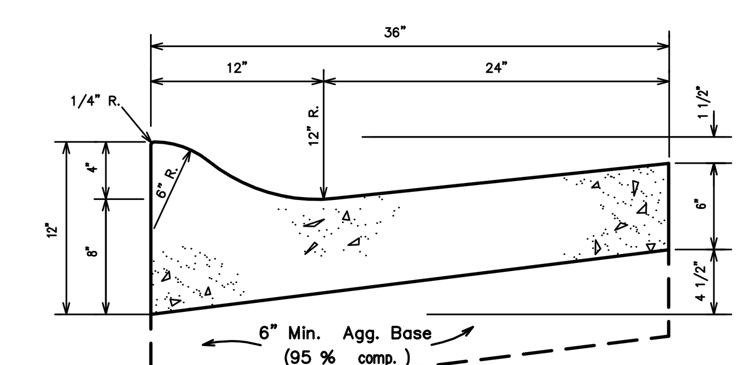

TYPE 3 CURB & GUTTER
(Industrial Area Only)

NOTE:
General notes for all curb and gutter as shown on Dwg. No.I–6.I will apply.

NO.	REVISION	DATE	STANDARD DETAILS FOR PUBLIC WORKS CONSTRUCTION	SECTION SPARKS	
			CITY OF SPARKS TYPE 3 P.C.C. CURB/GUTTER	DRAWING NO. S–3 (312)	
				DATE 7–81	PAGE 3

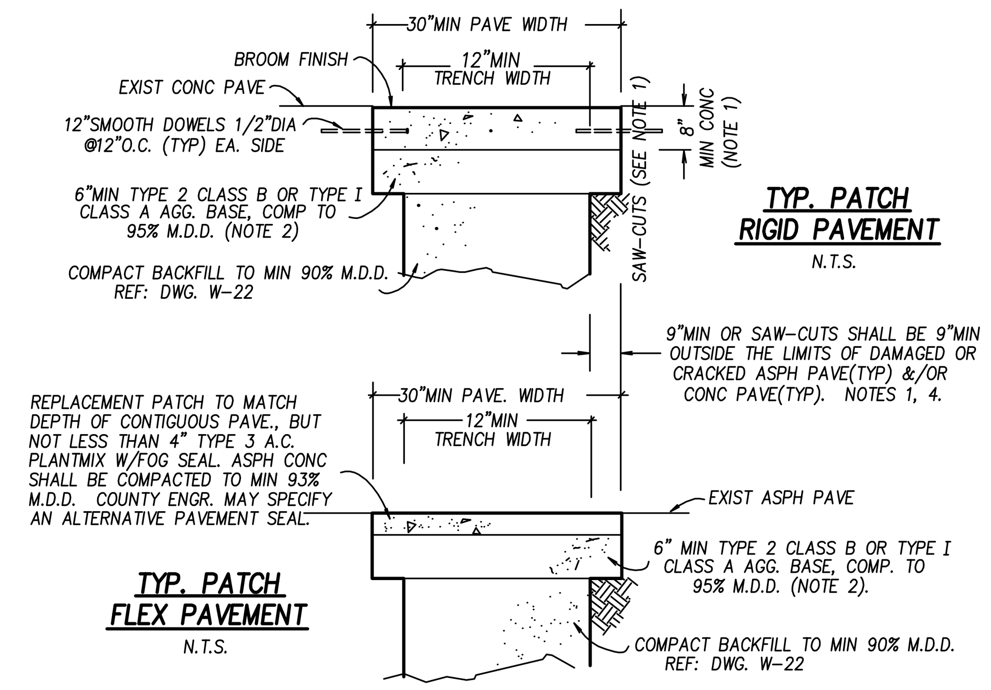

NOTES

1. ALL CONC REMOVAL & REPLACEMENT SHALL BE TO SAW–CUT LINES & SHALL BE DONE BY EXCAVATION CONTRACTOR OR SUBCONTRACTOR. ALL SAW–CUTS SHALL BE VERT & IN STRAIGHT LINES PARALLEL OR PERPENDICULAR TO TRENCH, OR TO SATISFACTION OF THE CO. ENGINEER. CONC SHALL BE MIN 6.25sack 4000psi WITH FIBERMESH W/4.5–7.5% AIR.
   RIGID PAVEMENT: IF SAW–CUT IS WITHIN 36" OF EDGE OR JOINT ON PCC PAVE., REMOVE PCC TO EXIST EDGE & REPLACE ENTIRE SECTION. FLEX PAVEMENT: IF SAW–CUT IS WITHIN 36" OF EDGE ON A.C. PAVE., EDGE OF VALLEY GUTTER, LIP OF CURB & GUTTER, OR A PREVIOUS PATCH, REMOVE EXIST PAVE TO THAT EDGE AND REPLACE THE ENTIRE SECTION.
2. DEPTH OF BASE TO BE 6" MIN., OR MATCH EXIST BASE IF GREATER.
3. UNPAVED STREET SHALL RECEIVE 6" MIN BASE COURSE IN ACCORDANCE W/LATEST EDITION OF THE STANDARD SPECIFICATIONS FOR PUBLIC WORKS CONSTRUCTION.
4. ALL ASPH REMOVAL SHALL BE TO SAW–CUT LINES. ALL ASPH CONC SHALL BE TYPE 3 PLANTMIX. ALL SAW–CUTS FOR FLEXIBLE PAVE SHALL BE PERFORMED BY EXCAVATION CONTRACTOR OR SUBCONTRACTOR.
5. ALL CONST SHALL BE IN ACCORDANCE W/LATEST EDITION OF STD. SPECIFICATIONS FOR PUBLIC SORKS CONST.
6. USE OF ROCK WHEEL TRENCHING MACHINES OR SIMILAR EQUIP SHALL NOT BE PERMITTED WITHIN PAVED AREAS OR WITHIN 1 FT OF EDGE OF PAVING.
7. CONC SLURRY W/MIN OF 1 SACK OF CEMENT PER CU.YD. OF SLURRY OR OTHER APPROVED MIX DESIGN MAY BE USED FOR BASE COURSE, BEDDING OR BACKFILL IF APPROVED BY CO. ENGINEER & UTILITY COMPANIES.
8. PERMANENT RESURFACING SHALL NOT BE PLACED ON TRENCHES BACKFILLED W/CONC SLURRY FOR A MIN OF 7 DAYS AFTER PLACEMENT OF THE CONC SLURRY OR SIMILAR MATERIAL.
9. ALL TRENCHES SHALL BE PATCHED W/COLD PATCH WITHIN 24 HRS AFTER BACKFILLING IS COMPLETED, OR COVERED W/STEEL PLATES & BARRICADED TO SATISFACTION OF THE COUNTY ENGINEER.

NO.	REVISED	DATE	STANDARD DETAILS FOR PUBLIC WORKS CONSTRUCTION	SECTION: WASHOE	
1	Widen dim's	8/03vp	PERMANENT PAVEMENT PATCH	DRAWING NO: W–2.2	
2	notes	12/05sw		DATE: 4/94 vp	PAGE: 9

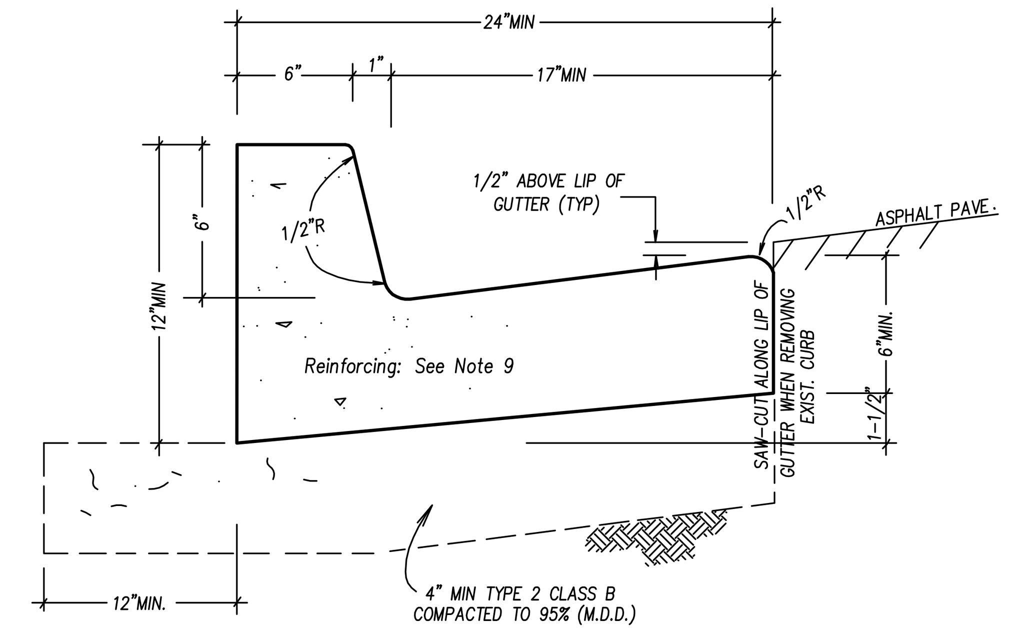

SECTION

NOTES

1. PORTLAND CEMENT CONC. (P.C.C.) SHALL HAVE THE FOLLOWING CHARACTERISTICS; 4000psi MIN. COMPRESSIVE STRENGTH @ 28 DAYS W/MIN. OF 6.25 SACKS OF CEMENT PER CU.YD. OF CONC.: AIR ENTRAINMENT SHALL BE 4.5 – 7.5% SLUMP SHALL RANGE FROM 1" MIN. TO 4" MAX. ALL MATERIALS SHALL CONFORM TO SSPWC SEC.202
2. CURB & GUTTER SHALL HAVE WEAKENED PLANE JOINTS ON 10' CENTERS (MAX).
3. AGGREGATE BASE SHALL BE TYPE 2 CLASS B AGGREGATE BASE COMPACTED TO A MIN. 95% MAXIMUM DRY DENSITY.
4. EVAPORATION REDUCERS (SUCH AS CONFILM) SHALL BE APPLIED IMMEDIATELY AFTER INITIAL FINISHING.
5. CURING AGENTS SHALL BE APPLIED PER SECTION 202.11.02 IMMEDIATELY AFTER FINAL FINISHING.
6. CURB REMOVAL SHALL BE DONE TO NEAT SAW–CUT LINES.
7. ONE SET OF TEST CYLINDERS (SET OF 4 MIN.) SHALL BE TAKEN FOR EACH 50 YDS. OF CONC. PLACED INCLUDING SLUMP, AIR, AIR TEMPERATURE, AND CONC. TEMPERATURE OR A MIN. OF 1 SET OF 4 CYLINDERS FOR EACH DAY'S POUR.
8. NO EQUIPMENT SHALL BE PERMITTED ADJACENT TO OR ACROSS THE CURB UNTIL THE FOURTH DAY FOLLOWING PLACEMENT OF THE CONC. OR UNTIL THE CONCRETE HAS REACHED A MIN. COMPRESSIVE STRENGTH OF 3000psi.
9. REINFORCING SHALL CONSIST OF COLLATED, FIBRILLATED, POLYPROPYLENE FIBERS AS MANUFACTURED BY FIBERMESH OR APPROVED EQUAL. USE 1–1/2LBS. PER CU.YD. ON CONCRETE.

NO.	REVISED	DATE	STANDARD DETAILS FOR PUBLIC WORKS CONSTRUCTION	SECTION: WASHOE	
1	REDRAW	11/92vp	TYPE I P.C.C. CURB & GUTTER	DRAWING NO: W–16.1	
2	NOTE 2,9	1/94vp		DATE: 11/92vp	PAGE: 29

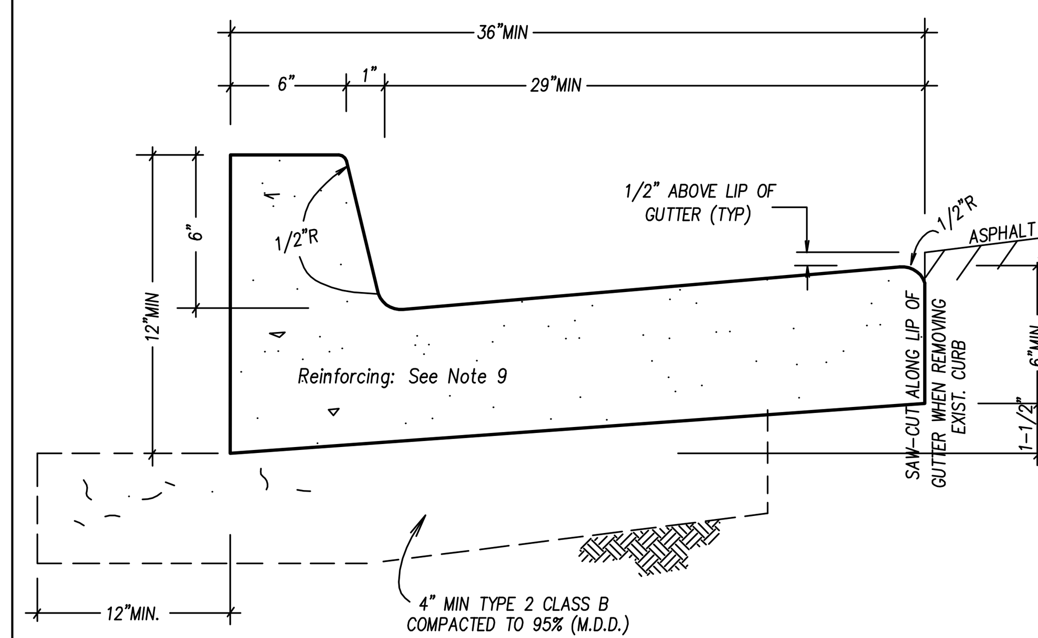

SECTION

NOTES

1. PORTLAND CEMENT CONC. (P.C.C.) SHALL HAVE THE FOLLOWING CHARACTERISTICS; 4000psi MIN. COMPRESSIVE STRENGTH @ 28 DAYS W/MIN. OF 6.25 SACKS OF CEMENT PER CU.YD. OF CONC.: AIR ENTRAINMENT SHALL BE 4.5 – 7.5% SLUMP SHALL RANGE FROM 1" MIN. TO 4" MAX. ALL MATERIALS SHALL CONFORM TO SSPWC SEC.202
2. CURB & GUTTER SHALL HAVE WEAKENED PLANE JOINTS ON 10' CENTERS (MAX).
3. AGGREGATE BASE SHALL BE TYPE 2 CLASS B AGGREGATE BASE COMPACTED TO A MIN. 95% MAXIMUM DRY DENSITY.
4. EVAPORATION REDUCERS (SUCH AS CONFILM) SHALL BE APPLIED IMMEDIATELY AFTER INITIAL FINISHING.
5. CURING AGENTS SHALL BE APPLIED PER SECTION 202.11.02 IMMEDIATELY AFTER FINAL FINISHING.
6. CURB REMOVAL SHALL BE DONE TO NEAT SAW–CUT LINES.
7. ONE SET OF TEST CYLINDERS (SET OF 4 MIN.) SHALL BE TAKEN FOR EACH 50 YDS. OF CONC. PLACED INCLUDING SLUMP, AIR, AIR TEMPERATURE, AND CONC. TEMPERATURE OR A MIN. OF 1 SET OF 4 CYLINDERS FOR EACH DAY'S POUR.
8. NO EQUIPMENT SHALL BE PERMITTED ADJACENT TO OR ACROSS THE CURB UNTIL THE FOURTH DAY FOLLOWING PLACEMENT OF THE CONC. OR UNTIL THE CONCRETE HAS REACHED A MIN. COMPRESSIVE STRENGTH OF 3000psi.
9. REINFORCING SHALL CONSIST OF COLLATED, FIBRILLATED, POLYPROPYLENE FIBERS AS MANUFACTURED BY FIBERMESH OR APPROVED EQUAL. USE 1–1/2LBS. PER CU.YD. ON CONCRETE.

36" TYPE I
P.C.C. CURB & GUTTER

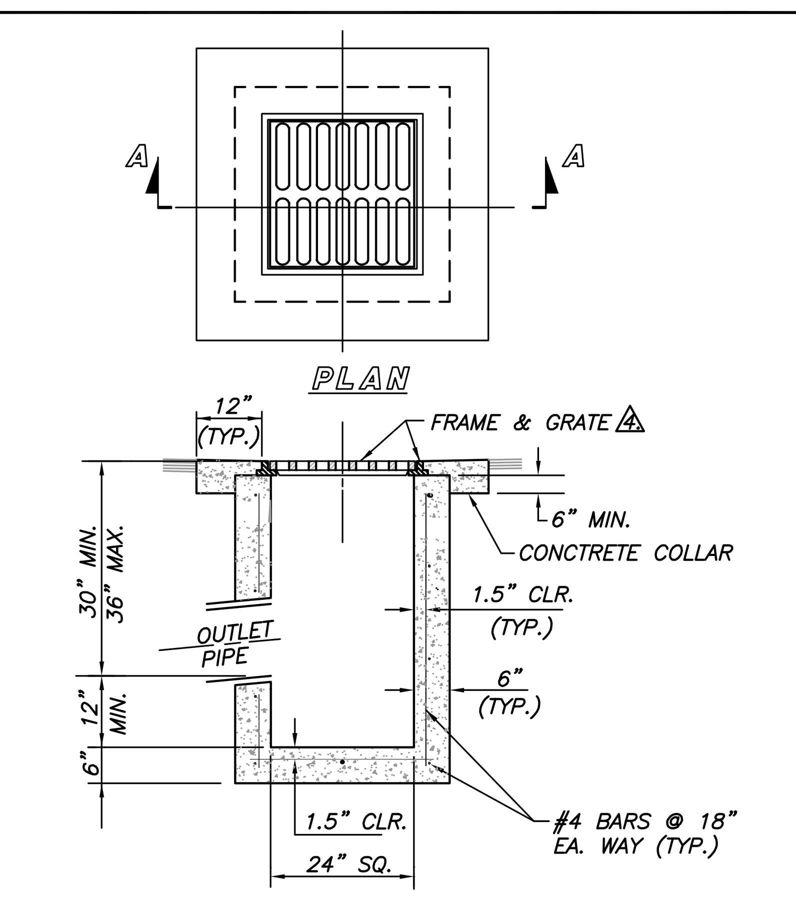

NOTES:

1. PORTLAND CEMENT CONCRETE (P.C.C.) SHALL HAVE THE FOLLOWING CHARACTERISTICS: 4000 PSI MIN. COMPRESSIVE STRENGTH @ 28 DAYS, (FOR COLLAR ONLY, ALL UNEXPOSED CONCRETE MAY BE 3000 PSI) MIN. 6 SACKS OF CEMENT PER CUBIC YARD WITH A MAX. WATER/CEMENT RATIO OF 0.45, AIR ENTRAINMENT 6% ±1.5%, SLUMP AT 1 TO 4 INCHES. ALL MATERIALS SHALL CONFORM TO SSPWC SECTION 202.
2. REINFORCING STEEL SHALL BE GRADE 40 AND HAVE 1.5" CLEAR COVER.
3. CONCRETE STRUCTURE MAY BE A PRE–CAST CONCRETE UNIT. BASE OF PRE–CAST CONCRETE UNIT SHALL BE PLACED ON 6" COMPACTED DRAIN ROCK.
4. FRAME & GRATE SHALL BE D&L I–9226 OR APPROVED EQUAL.
5. CATCH BASIN SHALL BE TRAFFIC–RATED AND USED ONLY AT LOW POINTS IN ALLEYS OR PARKING AREAS.
6. INSTALL GREASE TRAP PER STANDARD DETAIL DRAWING NO. R–213 (311).

NO.	REVISION	DATE	STANDARD DETAILS FOR PUBLIC WORKS CONSTRUCTION	SECTION	
			CATCH BASIN TYPE 3–R	DRAWING NO. R–205 (311)	
APPROVED BY: S.V.		08/00		DATE 08/00	PAGE 204

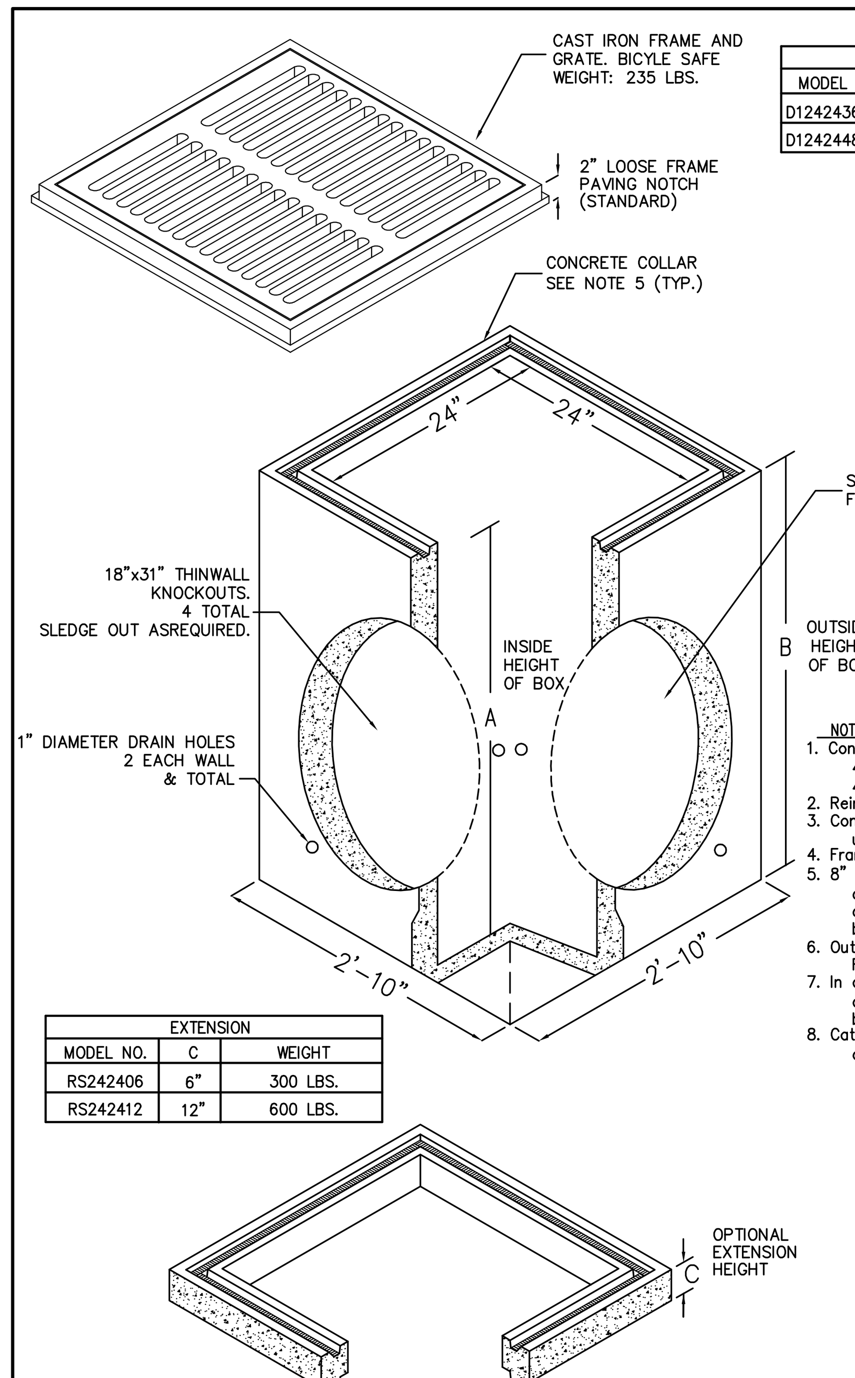

DROP INLET			
MODEL NO.	A	B	BOX WEIGHT
D1242436–3R	36"	42"	1900 LBS.
D1242448–3R	48"	54"	2500 LBS.

NOTES
1. Conc. for cast in place catch basin & 4x4' conc. pad shall be 6.25 sack 4000 psi w/4.5–7.5% entrained air.
2. Reinforcing shall be fibermesh.
3. Conc. structure may be a pre cast conc. unit upon approval of the Co. Engineer.
4. Frame and grate shall be bicylcle safe.
5. 8" thick conc. collar 12" wide shall be constructed as shown. 6" of Type 2 agg. base shall be placed & compacted beneath conc. collar.
6. Outlet pipe shall me min. 12" diameter RCP or PVC.
7. In areas of fine grained or expansive soils, class "C" backfill depth below the bottom of the box shall be 24 inches.
8. Catch basin outlet pipe shall be bedded in class "C" backfill.

EXTENSION		
MODEL NO.	C	WEIGHT
RS242406	6"	300 LBS.
RS242412	12"	600 LBS.

NO.	REVISED	DATE	STANDARD DETAILS FOR PUBLIC WORKS CONSTRUCTION	SECTIONS 2	
1			TYPE 3–R CATCH BASIN	DRAWING NO. 2–24	
2					
3				DATE 06–07	PAGE 37

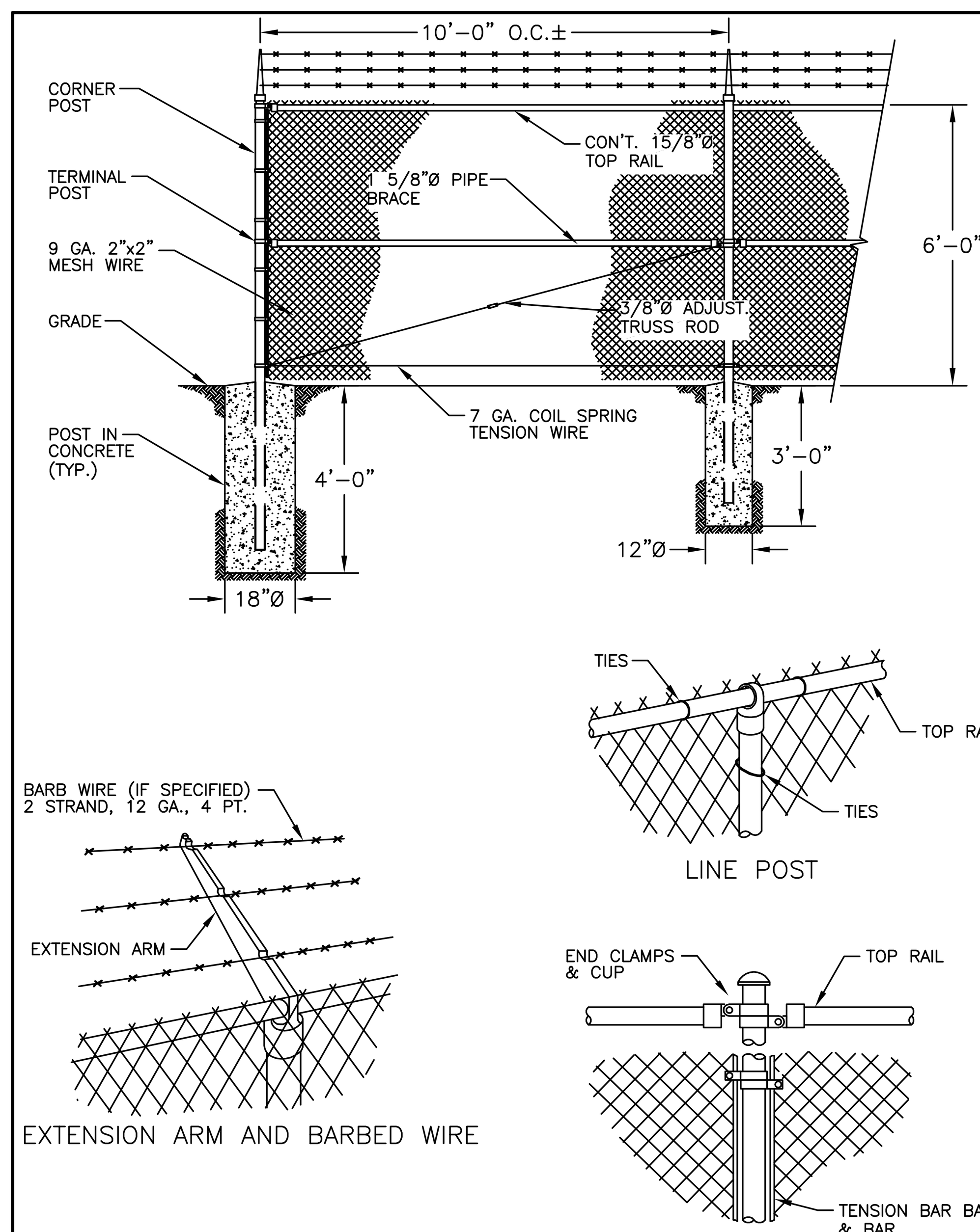

NO.	REVISION	DATE		SECTION
			TYPICAL CHAIN LINK FENCE DETAILS	DRAWING NO.
				DATE / PAGE

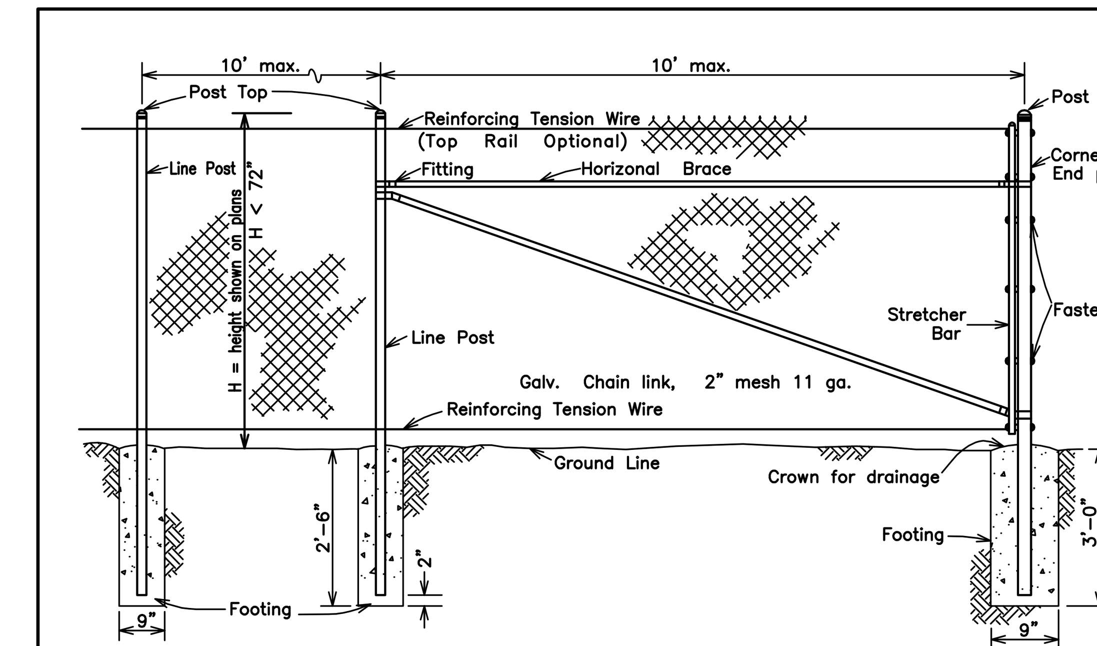

NOTES:

1. Fencing shall be chain link and shall consist of galvanized chain link fabric on steel posts.
   (a) All posts tops shall be fitted with suitable finials.
   (b) Braces shall be spaced approximately 12" below top of terminal posts and shall extend from end, gate, or corner posts to first adjacent line post.
   (c) All fittings shall be hot–dipped galvanized malleable, cast iron, or pressed steel.
   (d) Top and bottom selvages of the fence shall have a twisted and barbed finish.
2. Barbed wire, Extension Arms, and Top Horizontal Rails shall be installed only when shown on the plans and/or called for in the special provisions.

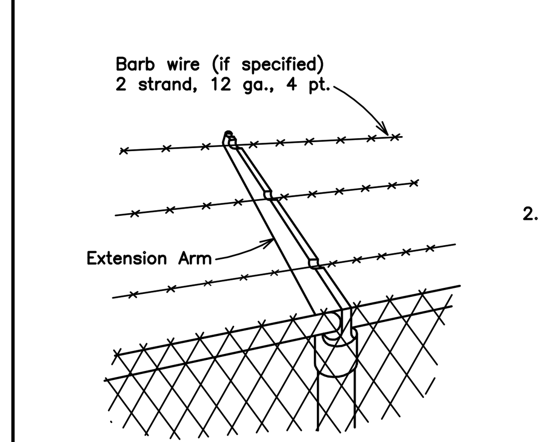

EXTENSION ARM AND BARBED WIRE

TABLE I

For Chain Link Fence 72" and Less

Location	Min. Size	Min. Weight (#/ft.)
End, corner & pull	2.351 O.D.	3.10
Line	1.869 O.D.	2.27
Braces	1.630 O.D.	2.27
Top Rail	1.630 O.D.	2.27

SECTION

NO.	REVISION	DATE	STANDARD DETAILS FOR PUBLIC WORKS CONSTRUCTION	SECTION I	
1	LINE SIZE	3–83	CHAIN LINK FENCE (72" High or Less)	DRAWING NO. I.24.I (325)	
2	SPELLING	10–16–66		DATE 7–81	PAGE 34

REV No	DATE	DESCRIPTION	APPROVED

DESIGNED BY: N/A
DRAWN BY: N/A
CHECKED BY: NL
APPROVED BY: NL
SCALE
HORIZ: N.T.S.
VERT: N/A
FIELD BOOK

HDR Engineering, Inc.
9805 Double R Blvd,
Suite 101
Reno, NV 89521
Phone: 775–337–4700

City of Sparks

NORTH TRUCKEE DRAIN REALIGNMENT PHASE 3

STANDARD DETAILS

CITY OF SPARKS, NEVADA, PUBLIC WORKS DEPARTMENT

PROFESSIONAL ENGINEER – STATE OF NEVADA
NOEL C. LAUGHLIN
Exp. 12/31/17
CIVIL
No.10165
5/11/16

SHEET No
DT-1

SHT OF

C: \pwworking\phx\d0351221\DT–01x.dwg 05/02/16 7:06am POXBORRO

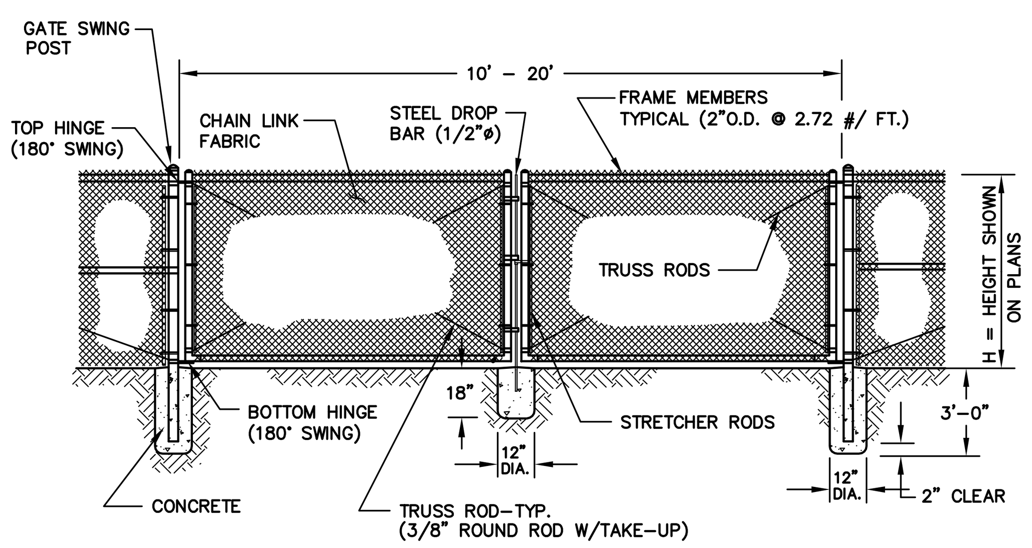

DOUBLE SWING GATE

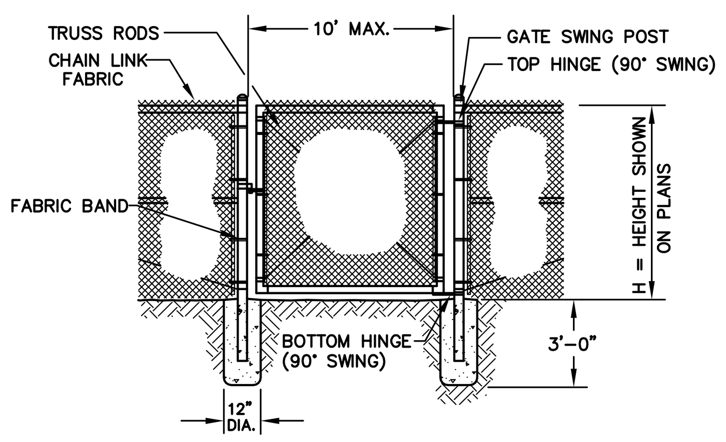

SINGLE GATE

GATE SWING POST DIA. GATE SIZE	PIPE DIA.
6' AND LESS	3"O.D. – 5.79 LBS./FT.
6' – 10'	4"O.D. – 9.10 LBS./FT.

NO.	REVISION	DATE		SECTION
			CHAIN LINK GATES	DRAWING NO.
				DATE / PAGE

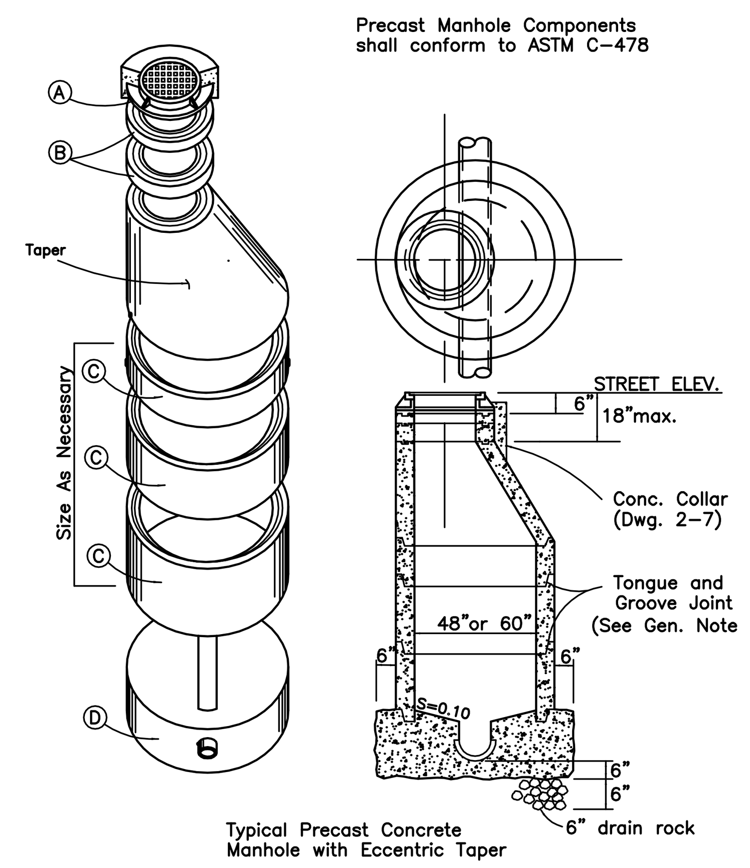

EXPLODED VIEW

NOTES:

1. Manhole section lengths arranged to fit depth.
2. Precast base may be used if approved by Governing Agency.
3. Lander Co. Only–Manholes constructed in non–paved area shall have min. wall thichness of 5" on cone and barrel sections.

SYM	ITEM
A	Ring & Cover
B	Grade Adjusting Ring
C	Precast manhole section
D	Base

NO.	REVISION	DATE	STANDARD DETAILS FOR PUBLIC WORKS CONSTRUCTION	SECTION 2
1	NOTE 3	3–83	MANHOLE	DRAWING NO. 2–2.3 (306)
2	ITEM C,D	8–85	TYPE I–A	DATE 7–81 / PAGE 5
3	Collar,dr.rock	5–95vp		

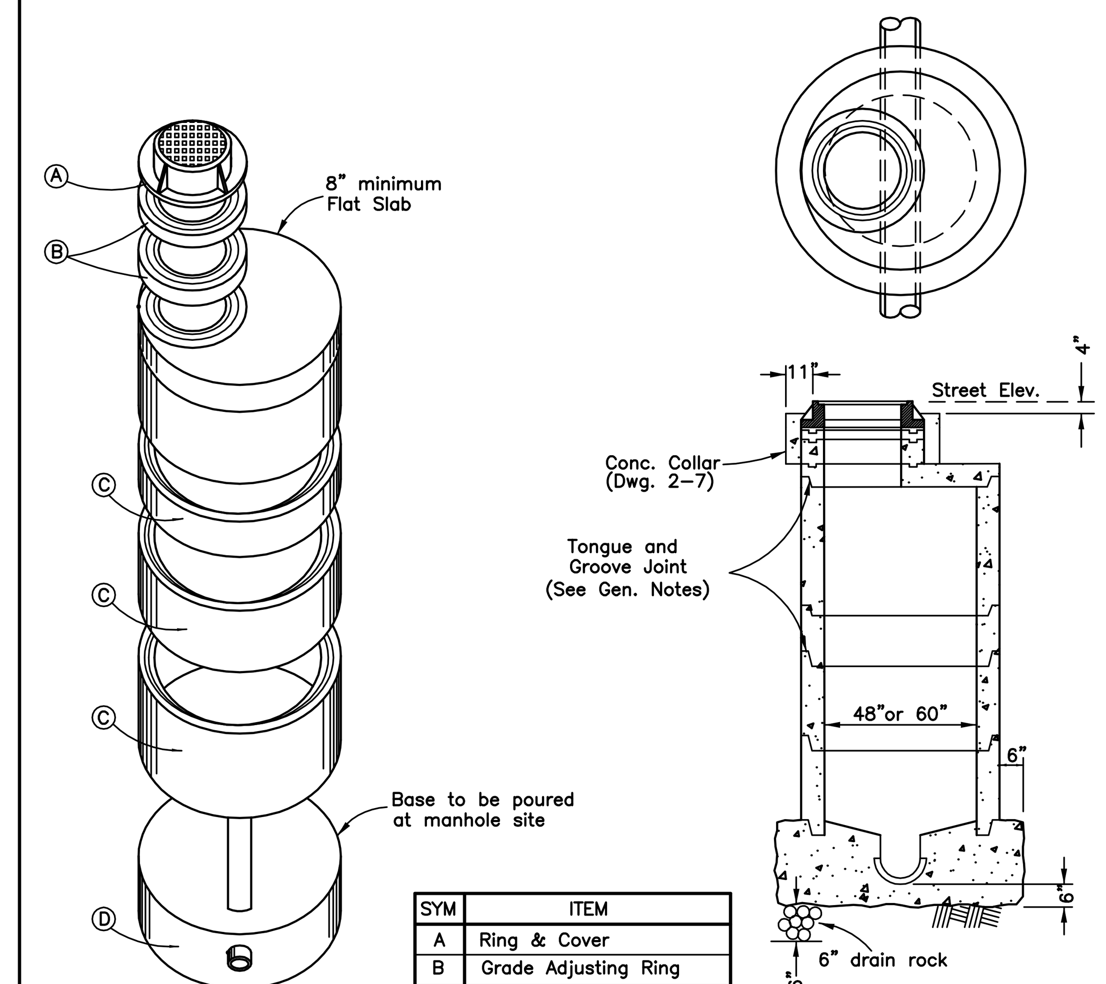

SYM	ITEM
A	Ring & Cover
B	Grade Adjusting Ring
C	Precast manhole section
D	Base

NOTES:

1. Manhole section lengths arranged to fit depth.
2. Precast base may be used if approved by Governing Agency.
3. Lander Co. Only–Manholes constructed in non–paved area shall have min. wall thickness of 5" on cone and barrel sections.

NO.	REVISION	DATE	STANDARD DETAILS FOR PUBLIC WORKS CONSTRUCTION	SECTION 2
1	NOTE 3	3–83	MANHOLE	DRAWING NO. 2–3.3 (306)
2	ITEM C,D	8–85	TYPE I–B	DATE 7–81 / PAGE 6
3	Collar,dr.rock	5–95vp		

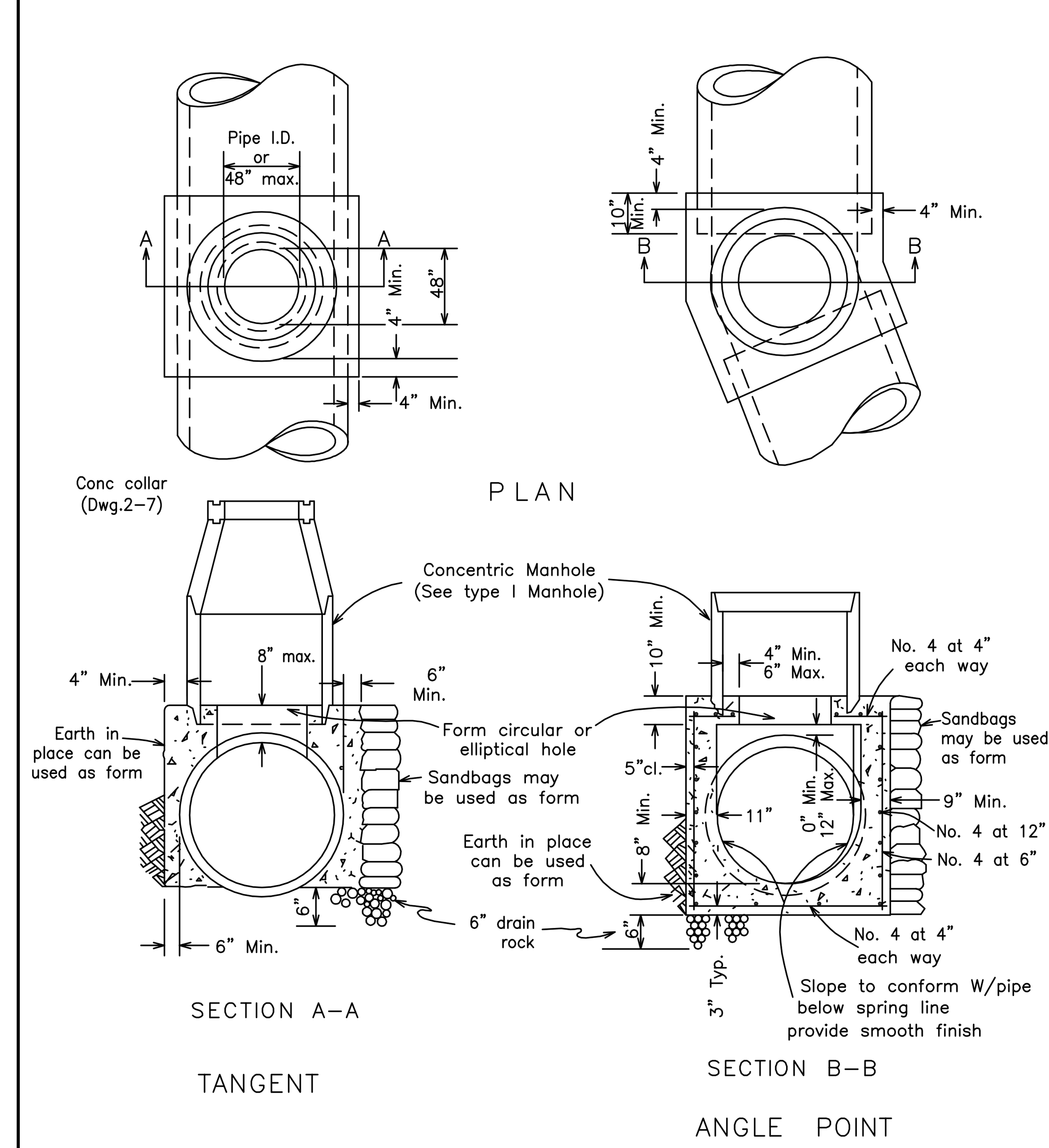

NO.	REVISION	DATE	STANDARD DETAILS FOR PUBLIC WORKS CONSTRUCTION	SECTION 2
I	Drain rock	5–95vp	MANHOLE TYPE IV	DRAWING NO. 2–6 (306)
				DATE 7–81 / PAGE 9

MANHOLE GENERAL NOTES

1. *Manhole materials and construction shall conform to the requirements of Section 204 "Manholes and Catch Basins" of the Standard Specifications.*
2. *Portland Cement Concrete (PCC) shall have the following characteristics: 3000psi min. compressive strength @ 28 days, min. 6 sacks of cement per cu. yd. Slump @ 1–4 inches. All materials shall conform to SSPWC Sec. 202. 3000psi conc shall be permitted on manhole bases only.*
3. *Reinforcing steel shall be as shown, wired tightly at all intersections & embedded at least one inch clear unless otherwise noted.*
4. *All manholes shall include hinged EJIW (East Jordan Iron Works) or Pamrex 24" maximum frame & cover assembly, or equal, with identification of storm drain or sewer clearly displayed on the cover.*
5. *Excavation and backfill shall be as specified for "Trench Excavation & Backfill" in Sec.305.00 of the Standard Specifications.*
6. *Excavation shall be as nearly vertical as possible, (sheet & shore if soil conditions require), in existing street sections, alley sections & confined areas such as limited easements, or adjacent to structures. Natural angle or repose will be allowed in all other areas.*
7. *Precast manhole sections, other than grade rings, shall be joined with flexible plastic gasket material such as "Ram–Nek" or equal as per manufacturer's recommendations.*
8. *Manhole Design for pipe larger than 60" shall be submitted to the governing agency for approval.*

NO.	REVISION	DATE		SECTION
			MANHOLE GENERAL NOTES	DRAWING NO.
				DATE / PAGE

MANHOLE GENERAL NOTES

9. *Manhole design for depths exceeding 18 feet shall be submitted to the governing agency for approval.*
10. *Type and size of manhole to be constructed in a particular location shall be determined by the pipe size, alignment & grade as follows:*

TYPE I
48" size
a. All cases for pipe 18" and smaller.
b. 24" and smaller pipe on tangent line and grade.
60" size
a. 27" through 36" pipe on tangent line and grade.
b. 21" through 27" pipe at angle points and changes in grade or pipe size.

TYPE I–A
Used in place of Type I as authorized by the governing agency.

TYPE I–B
Used in place of Type I only as authorized by the agency when cover above conduit is limited.

TYPE II
48" size
30" through 60" pipe on tangent line with a change in grade or pipe size.

TYPE III
Used in place of Type I when 2' or more drop is desired in sewer main.

TYPE IV
Tangent
60" size
a. 39" through 60" pipe on tangent line and grade with no change in pipe size.
b. In Washoe Co. 36" dia. manhole cover required for all type IV manholes.
Angle Point
60" size
30" through 60" pipe at angle point in line.

11. *Manhole min. wall thickness shall be 5" when steps are required. Within City of Reno min. wall thickness shall be in accordance with ASTM C–478.*

NO.	REVISION	DATE		SECTION
			MANHOLE GENERAL NOTES	DRAWING NO.
				DATE / PAGE

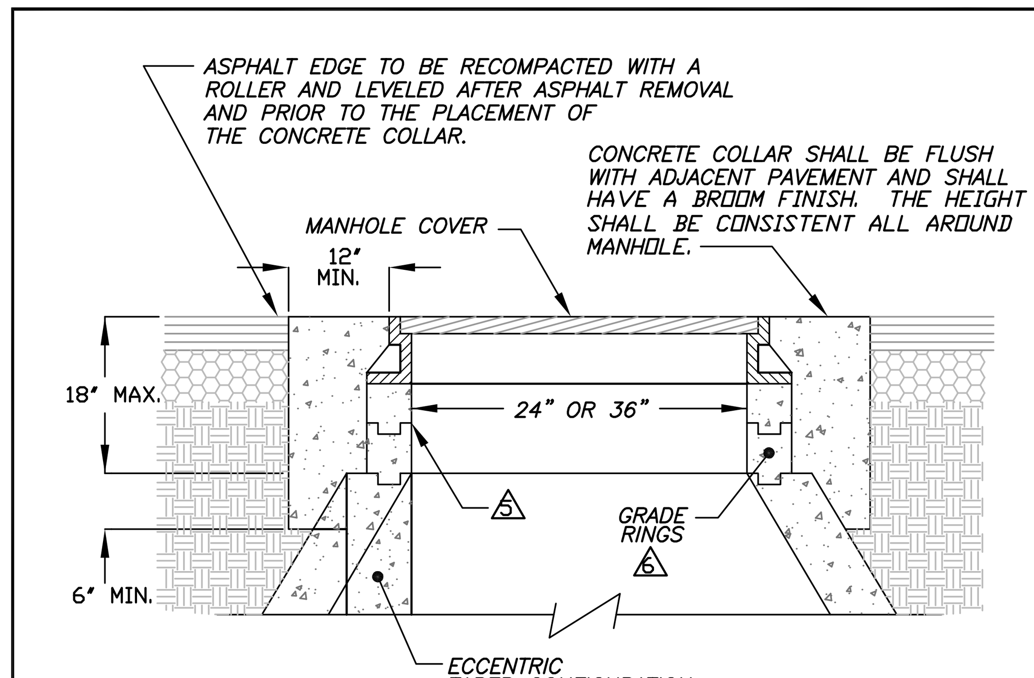

NOTES:

1. *CONCRETE COLLAR TO BE PORTLAND CEMENT CONCTRETE (P.C.C.) WITH THE FOLLOWING CHARACTERISTICS: 4000 PSI MIN. COMPRESSIVE STRENGTH AT 28 DAYS, MIN. 6 SACKS OF CEMENT PER CUBIC YARD WITH A MAX. WATER/CEMENT RATIO OF 0.45, AIR ENTRAINMENT 6% ±1.5% AND SLUMP AT 1 TO 4 INCHES. ALL MATERIAL SHALL CONFORM TO SSPWC SECTION 202.*
2. *CIRCUMSTANCES MAY REQUIRE THE NEED FOR SPECIAL TYPES OF TOP OF MANHOLE CONFIGURATIONS SUCH AS FLAT TOP, ABOVE GROUND, ETC. AS DIRECTED BY THE CITY OF RENO. DETAILED PLANS OF ANY SPECIAL TOP OF MANHOLE CONFIGURATIONS AND ASSOCIATED COLLARS MUST BE APPROVED BY THE ENGINEER.*
3. *IN UNPAVED AREAS, IT SHALL BE NECESSARY TO SET THE MANHOLE RIM APPROXIMATELY 6 INCHES ABOVE THE SURROUNDING AREA. INSTALL A 6 INCH THICK RING OF CONCRETE, TAPERED AT A 3:1 SLOPE, FROM THE TOP, OUTSIDE EDGE OF THE COLLAR TO THE EXISTING GROUND SURFACE.*
4. *MANHOLE LIDS SHALL NOT BE LOCATED IN GUTTER PANS, UNLESS OTHERWISE APPROVED BY THE CITY ENGINEER.*

5\. *ALL GRADE RING JOINTS ARE TO BE GROUTED WITH NON–SHRINK GROUT HAVING THE FOLLOWING CHARACTERISTICS: 3000 PSI MIN. COMPRESSIVE STRENTH AT 28 DAYS, MIN. 6 SACKS OF CEMENT PER CUBIC YARD AND SLUMP AT 1 TO 4 INCHES. ALL MATERIAL SHALL CONFORM TO SSPWC SECTION 202.*

6\. *ALL GRADE RINGS SHALL BE PORTLAND CEMENT CONCRETE. PVC GRADE RINGS ARE NOT ALLOWED.*

NO.	REVISION	DATE	STANDARD DETAILS FOR PUBLIC WORKS CONSTRUCTION	SECTION
1	NOTES 5 & 6	01/04	MANHOLE COLLAR	DRAWING NO. R–218 (306)
APPROVED BY:		G.S01/04		DATE 08/00 / PAGE 223

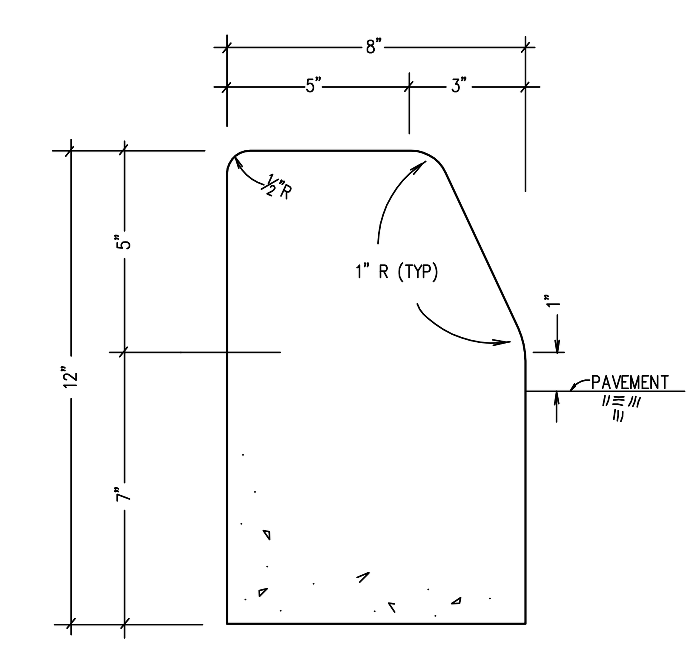

TYPE "A" CURB

NOTES:

1. SEE NOTES FOR TYPE I CURB & GUTTER.
2. ALL CONC FOR TYPE I OR TYPE "A" CURB SHALL BE REINFORCED W/ COLLATED, FIBRILLATED POLYPROPYLENE FIBERS AS MANUFACTURED BY FIBERMESH OR APPROVED EQUAL. REINFORC'G SHALL BE 1½ LBS OF FIBERMESH PER CU. YD. OF CONCRETE.

TYPE "A" CURB

REV No	DATE	DESCRIPTION	APPROVED

DESIGNED BY:	N/A
DRAWN BY:	N/A
CHECKED BY:	NL
APPROVED BY:	NL
SCALE	
HORIZ:	N.T.S.
VERT:	N/A
FIELD BOOK	

HDR Engineering, Inc.
9805 Double R Blvd,
Suite 101
Reno, NV 89521
Phone: 775–337–4700

City of Sparks

NORTH TRUCKEE DRAIN REALIGNMENT PHASE 3

STANDARD DETAILS

CITY OF SPARKS, NEVADA, PUBLIC WORKS DEPARTMENT

PROFESSIONAL ENGINEER – STATE OF NEVADA – NOEL C. LAUGHLIN – Exp. 12/31/17 – CIVIL – No.10165

5/11/16

SHEET No
DT-2
SHT OF

C:\pwworking\phx\d0351221\DT-01x.dwg 05/02/16 7:06am POXBORRO

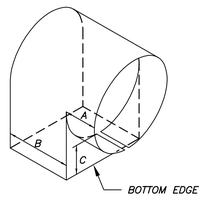

DIMENSIONS			
SIZE	A	B	C
4"	3"	3"	3"
6"	4"	5"	4"
8"	4"	6.5"	4"
10"	4"	8"	4"
12"	5"	10"	4"
15"	6"	10.5"	6.5"

NOTES:

1. ALL CATCH BASINS SHALL BE PROVIDED WITH A "SUR-TRAP" GREASE TRAP OR APPROVED EQUAL.
2. INSTALL GREASE TRAP WITH THE BOTTOM EDGE PARALLEL TO THE WATER SURFACE AND THE RECTANGULAR OPENING FACING DOWNWARD AND THE CIRCULAR END PLACED INSIDE THE OUTLET PIPE.

NO.	REVISION	DATE	STANDARD DETAILS FOR PUBLIC WORKS CONSTRUCTION	SECTION	
			"SUR-TRAP" GREASE TRAP	DRAWING NO. R-213 (311)	
APPROVED BY: S.V. 08/00				DATE 08/00	PAGE 218

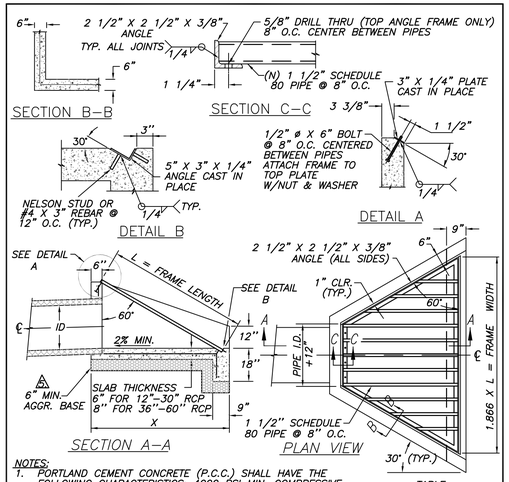

NOTES:

1. PORTLAND CEMENT CONCRETE (P.C.C.) SHALL HAVE THE FOLLOWING CHARACTERISTICS: 4000 PSI MIN. COMPRESSIVE STRENGTH AT 28 DAYS, MIN. 6 SACKS OF CEMENT PER CUBIC YARD WITH A MAX. WATER/CEMENT RATIO OF 0.45, AIR ENTRAINMENT 6% ±1.5%, SLUMP AT 1 TO 4 INCHES. ALL MATERIALS SHALL CONFORM TO SSPWC SECTION 202.
2. REINFORCING STEEL SHALL BE NO. 5 @ 12" BW, SET 2" CLEAR OF CONCRETE BOTTOM SURFACE.
3. ALL METAL PARTS SHALL BE GALVANIZED AFTER WELDING.
4. ALL EXPOSED CONCRETE EDGES SHALL BE CHAMFERED 3/4".
5. PLACE A MIN. OF 6" OF TYPE 2, CLASS B AGGREGATE BASE COMPACTED TO A MIN. OF 95% UNDER ALL CONCRETE. 6" OF DRAIN ROCK MAY BE USED FOR BASE MATERIAL.

TABLE

SIZE DIA	X	L	N (EA.)
12"	4'-5"	4'-3"	7
15"	4'-10"	4'-9"	9
18"	5'-3"	5'-3"	9
24"	6'-1.5"	6'-3"	11
30"	7'-0"	7'-3"	15
36"	7'-10.5"	8'-3"	17
42"	8'-9"	9'-3"	19
48"	9'-7"	10'-3"	21
54"	10'-5.5"	11'-3"	23
60"	11'-4"	12'-3"	25

NO.	REVISION	DATE	STANDARD DETAILS FOR PUBLIC WORKS CONSTRUCTION	SECTION	
			TRASH RACK FOR 12" TO 60" RCP	DRAWING NO. R-225 (311,326)	
APPROVED BY: S.V. 08/00				DATE 08/00	PAGE 231

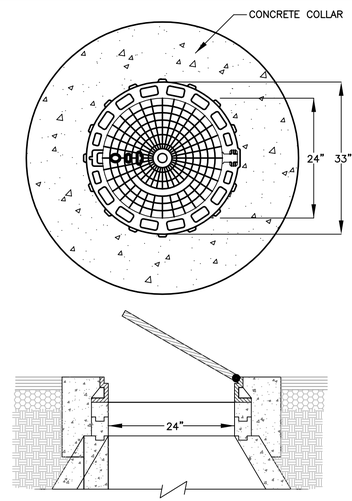

NOTES:

1. HINGED MANHOLE COVER SHALL BE EAST JORDAN IRON WORKS, ERGO ACCESS ASSEMBLY 24-INCH MODEL OR APPROVED EQUAL.
2. COVER TO BE HINGED AND INCORPORATE A 90 DEGREE BLOCKING SYSTEM TO PREVENT ACCIDENTAL CLOSURE.
3. FRAME AND COVER SHALL BE ELASTOMER GASKETED.
4. ALL COMPONENTS SHALL BE BLACK COATED.

HINGED MANHOLE DETAIL

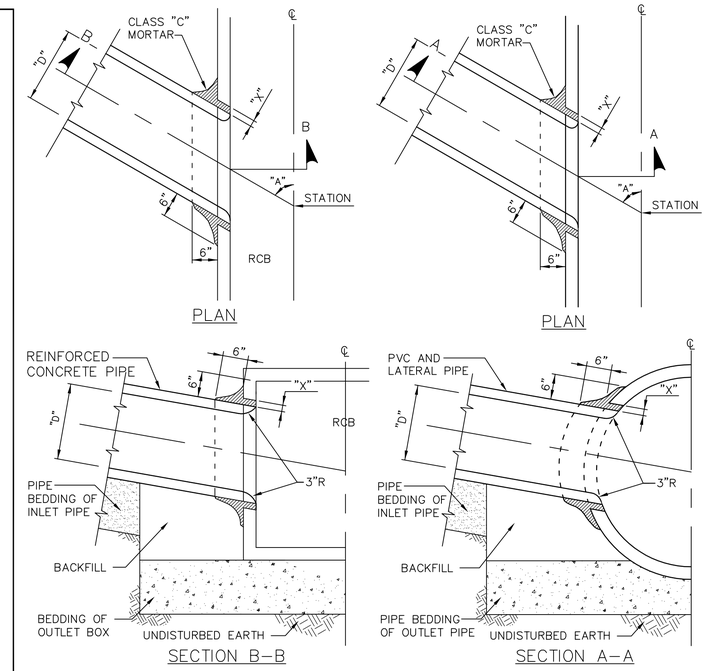

NOTES:

1. ANGLE "A" SHALL BE BETWEEN 60°.
2. DIMENSION "D" SHALL BE EQUAL TO OR LESS THAN 1/2 THE INSIDE DIMENSION OF THE MAINLINE BOX.
3. DIMENSION "X" SHALL BE 1" MINIMUM AND 3" MAXIMUM.
4. BURN OR CHIP END OF INLET PIPE FLUSH WITH INNER SURFACE OF MAINLINE. ROUND EDGES OF MAINLINE AND INLET PIPE.

BOX PENETRATION DETAIL

N.T.S.

NOTES:

1. ANGLE "A" SHALL BE BETWEEN 45° AND 90°.
2. DIMENSION "D" SHALL BE EQUAL TO OR LESS THAN 1/2 THE INSIDE DIAMETER OF THE MAINLINE PIPE.
3. DIMENSION "X" SHALL BE 1" MINIMUM AND 3" MAXIMUM.
4. BURN OR CHIP END OF INLET PIPE FLUSH WITH INNER SURFACE OF MAINLINE PIPE. ROUND EDGES OF MAINLINE AND INLET PIPES.

PIPE PENETRATION DETAIL

N.T.S.

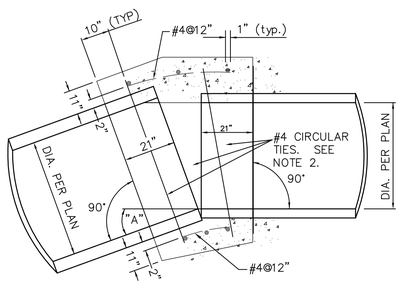

PLAN

NOTES:

1. WHERE THE SLOPE OF THE UPSTREAM PIPE IS GREATER THAN THE SLOPE OF THE DOWNSTREAM PIPE, JOIN SOFFITS. WHERE THE SLOPE OF THE UPSTREAM PIPE IS LESS THAN THE SLOPE OF THE DOWNSTREAM PIPE, JOIN INVERTS.

2. WHERE THE SPACE BETWEEN THE PIPE EXTREMITIES EXCEEDS 2 1/2 INCHES, THE NUMBER OF CIRCULAR TIES SHALL BE INCREASED TO MAINTAIN A MAXIMUM SPACING OF 6 INCHES CENTER TO CENTER. CIRCULAR TIES SHALL HAVE A DIAMETER 5 INCHES GREATER THAN THE OUTSIDE DIAMETER OF THE LARGER PIPE.

CIRCULAR TIES:

PIPE DIAMETER	SPACE BETWEEN PIPE EXTREMITIES	NO. OF CIRCULAR TIES
21" or less	2 1/2"	3
24" to 30"	2 1/2" or less	3
33" to 57"	2 1/2" or less	4
60" to 66"	2 1/2" or less	5

PIPE COLLAR DETAIL

N.T.S.

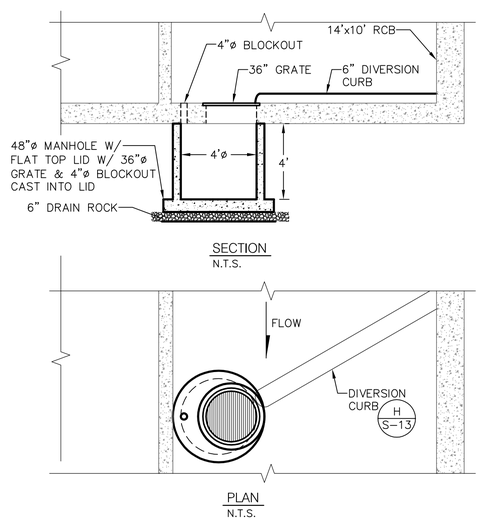

SUMP DETAIL

N.T.S.

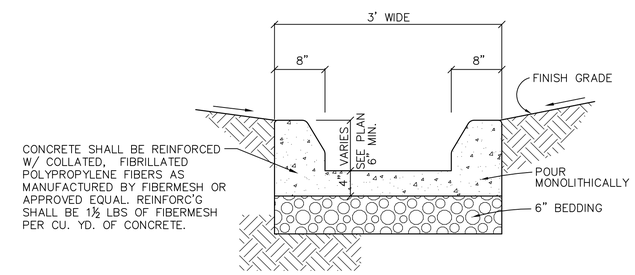

3' CONCRETE CHANNEL DETAIL

N.T.S.

REV No	DATE	DESCRIPTION	APPROVED

DESIGNED BY: N/A
DRAWN BY: N/A
CHECKED BY: NL
APPROVED BY: NL
SCALE N.T.S.
HORIZ:
VERT: N/A
FIELD BOOK

HDR Engineering, Inc.
9805 Double R Blvd.
Suite 101
Reno, NV 89521
Phone: 775-337-4700

City of Sparks

NORTH TRUCKEE DRAIN REALIGNMENT PHASE 3

STANDARD DETAILS

CITY OF SPARKS, NEVADA, PUBLIC WORKS DEPARTMENT

STATE OF NEVADA PROFESSIONAL ENGINEER JOEL LAUCHUN Exp. 12/31/17 CIVIL No. 10169 5/11/16

SHEET No

DT-3

SHT OF

C:\pwworking\phx\d0351221\DT-01x.dwg 05/02/16 7:06am POXBORRO

C:\pwworking\phx\d0351221\DT-01x.dwg 05/02/16 7:06am POXBORRO

FOR EXPOSED TOP, PROVIDE NO.4 BARS @ 18" EACH WAY (2' LAP WITH "C" BARS) AND ADJUST QUANTITIES

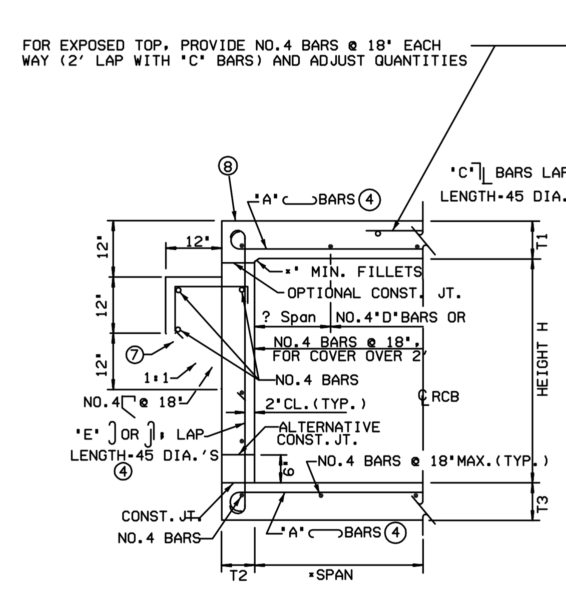

TYPICAL SECTION - SPANS 5' THRU 8'

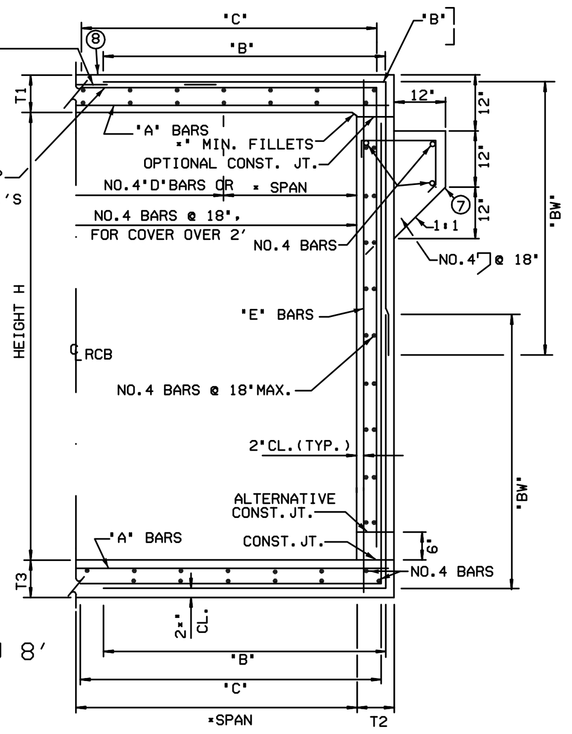

TYPICAL SECTION - SPANS 10' THRU 14'

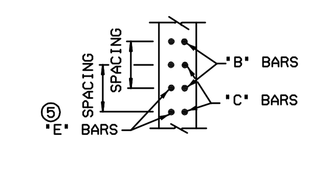

WALL SECTION
SPANS 10' THRU 14'

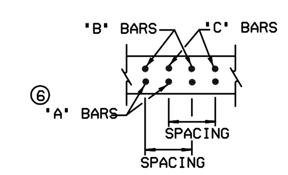

ROOF SECTION
SPANS 10' THRU 14'
INVERT SIMILAR

NOTES:

① FOR BOXES WITH SPAN OR HEIGHT LESS THAN ANY OF THOSE SHOWN IN TABLE, USE NEXT GREATER SIZE BOX CONCRETE DIMENSIONS AND REINFORCEMENT. ADJUST BAR LENGTHS AND RECALCULATE CONCRETE AND REINFORCEMENT QUANTITIES.

② FOR BOXES WITH SPAN OR HEIGHT OR COVER GREATER THAN THOSE SHOWN IN TABLES, A SPECIAL DESIGN IS REQUIRED.

③ QUANTITIES ARE APPROXIMATE AND FOR DESIGN PURPOSES ONLY.

④ IT IS PERMISSIBLE TO ELIMINATE THE 180° HOOKS ON EVERY OTHER BAR.

⑤ 'E' BARS ARE AT HALF SPACING.

⑥ 'A' BARS ARE AT HALF SPACING.

⑦ PROVIDE PAVING NOTCH WHEN TOP IS EXPOSED AND WHERE P.C.C. PAVEMENT OR APPROACH SLAB IS USED. ADJUST THE QUANTITIES.

⑧ WHEN TOP IS EXPOSED, THE TOP SLAB CONCRETE SHALL BE 'EA', F'C=4500 PSI, OR 'A', F'C=4000 PSI, AS DETERMINED BY THE ENGINEER. IF 'EA' CONCRETE IS TO BE USED, THE TOP SLAB REINFORCING STEEL SHALL HAVE AN EPOXY COATING.

SHEET 1 OF 2

NEVADA DEPARTMENT OF TRANSPORTATION

SINGLE RCB CULVERTS

Signed Original On File B-20.1.2 (502,505)
CHIEF BRIDGE ENGINEER ADOPTED 11/70 REVISION 1/09

SPAN FT.	5						6							
HEIGHT FT.	3		4		5		3		4		5		6	
MAXIMUM EARTH COVER FT.	10	20	10	20	10	20	10	20	10	20	10	20	10	20
CONC. ROOF T1 IN.	7*	7*	7*	7*	7*	7*	8	8	8	8	8	8	8	8
CONC. WALLS T2 IN.	6	6	6	7	6*	7*	6	6	6	7	6*	7*	7	8*
CONC. INVERT T3 IN.	6*	7	6*	7	6*	7	7	8	7	8	7	8	7	8
REINF. SPACING IN.	8*	5*	8*	5*	8*	5*	7*	5	7*	5	7*	5	7*	4*
REINF. 'A' BAR NO.	7	6	7	6	7	6	7	6	7	6	7	6	7	6
REINF. 'E' BAR NO.	4	4	5	5	6	6	4	4	5	5	6	6	7	6
QUAN CONCRETE CF/LF	10.0	10.2	11.0	12.0	12.5	13.7	11.7	12.3	12.7	14.2	14.2	15.9	15.9	18.3
QUAN REINFORCEMENT LBS/LF	58	68	67	81	82	105	70	81	82	96	97	120	124	148

SPAN FT.	7										8											
HEIGHT FT.	3		4		5		6		7		3		4		5		6		7		8	
MAXIMUM EARTH COVER FT.	10	20	10	20	10	20	10	20	10	20	10	20	10	20	10	20	10	20	10	20	10	20
CONC. ROOF T1 IN.	8	9	8	9	8	9	8*	9	8*	9	8*	9*	8*	9*	8*	9*	8*	10	8*	10	8*	10
CONC. WALLS T2 IN.	6	6	6	7	6*	7*	7	8*	8	9*	6	7	6	7	6*	7*	7	8*	8	9*	8*	10*
CONC. INVERT T3 IN.	8	9	8	9	8	9	8	9	8	9	8	9*	8	9*	8	10	8	10	8	10	8	10
REINF. SPACING IN.	6*	5	6*	4*	6*	5*	6*	5*	6*	5*	6	5	6	5	6	5	6	4*	6	5	6	4*
REINF. 'A' BAR NO.	7	6	7	6	7	7	7	7	7	7	7	7	7	7	7	7	7	7	7	7	7	7
REINF. 'E' BAR NO.	4	4	5	5	6	6	6	7	7	7	5	5	5	5	5	6	6	6	6	7	7	7
QUAN CONCRETE CF/LF	13.7	14.9	14.6	16.8	16.1	18.5	18.1	21.0	20.7	23.8	15.4	18.0	16.4	19.0	17.9	21.1	19.5	24.1	22.1	26.9	24.1	30.1
QUAN REINFORCEMENT LBS/LF	94	94	105	118	121	147	130	177	160	192	115	139	123	151	131	171	137	198	160	215	192	252

SPAN FT.	10															
HEIGHT FT.	3		4		5		6		7		8		9		10	
MAXIMUM EARTH COVER FT.	10	20	10	20	10	20	10	20	10	20	10	20	10	20	10	20
CONC. ROOF T1 IN.	8	10*	8	10*	8	10*	8	10*	8	10*	8	10*	8	10*	8*	11
CONC. WALLS T2 IN.	8	8	8	8	8	8	8	9	8	9	8	10	8*	11*	9*	12*
CONC. INVERT T3 IN.	8	11	8	11	8	11	8	11	8	11	8	11	8	11	8*	11
REINFORCEMENT SPACING IN.	13	12	13	12	13	12	12	12	11	11	10	11	11	10	11	10
'A' ⑥ BAR NO.	6	7	6	7	6	7	6	7	6	7	6	7	6	6	6	6
'B' BAR NO.	6	7	6	7	6	7	6	7	6	7	6	7	6	6	7	7
'B' DIMENSION 'B' FT.-IN.	2-10	2-11	2-10	2-11	2-11	2-11	2-11	3	2-11	3-9	2-11	3-9	2-11	3-9	2-11	3-9
'B' DIMENSION 'BW' FT.-IN.	2-10	3	2-10	3	4-10	5	4-10	5	4-10	5	4-10	5	4-10	5	4-7	4-7
'C' BAR NO.	6	7	6	7	6	7	6	7	6	7	6	7	7	7	7	7
'C' DIMENSION 'C' FT.-IN.	3-4	3-4	3-4	3-4	3-4	3-4	7-4	4-8	7-7	4-8	8-2	4-8	7-7	4-8	7-7	4-8
'E' ⑤ BAR NO.	4	4	4	4	4	4	4	4	4	4	4	4	4	4	5	5
QUAN CONCRETE CF/LF	19.1	24.3	20.4	25.6	21.6	26.8	23.0	29.5	24.3	31.0	25.6	34.1	27.8	37.7	32.1	42.3
QUAN REINFORCEMENT LBS/LF	161	230	169	237	191	267	233	285	260	325	300	339	314	327	360	373

SPAN FT.	12																	
HEIGHT FT.	4		5		6		7		8		9		10		11		12	
MAXIMUM EARTH COVER FT.	10	20	10	20	10	20	10	20	10	20	10	20	10	20	10	20	10	20
CONC. ROOF T1 IN.	8*	12	8*	12	8*	12	8*	12	8*	12	8*	12	8*	12	9*	12	9*	12
CONC. WALLS T2 IN.	8	10	8	10	8	10	8*	10*	8*	10*	8*	11*	9	12*	10*	13*	11*	15
CONC. INVERT T3 IN.	8*	12*	8*	12*	8*	12*	9	12*	9	12*	9	12*	9	12*	9*	13	10	13
REINFORCEMENT SPACING IN.	9	10	9	10	9	10	9	10	9	10	8	10	8	10	10	9	9	8
'A' ⑥ BAR NO.	6	7	6	7	6	7	6	7	6	7	6	7	6	7	6	6	6	6
'B' BAR NO.	6	7	6	7	6	7	6	7	6	7	6	7	6	7	7	7	6	7
'B' DIMENSION 'B' FT.-IN.	3-1	3-2	3-1	3-2	3-1	3-2	3-9	3-9	3-9	3-9	3-7	3-9	3-7	4-4	3-7	4-4	4-4	4-4
'B' DIMENSION 'BW' FT.-IN.	4	4	4	4	6	5-10	6-2	6-7	6-2	6-7	4-11	4-11	4-11	4-11	4-11	4-11	4-4	4-4
'C' BAR NO.	6	7	6	7	6	7	6	7	6	7	6	7	6	7	7	7	7	7
'C' DIMENSION 'C' FT.-IN.	4-4	4-4	4-4	4-4	4-4	3-7	8-1	5-7	8-1	5-7	8-1	5-7	8-1	5-7	8-1	5-7	8-1	5-7
'E' ⑤ BAR NO.	4	4	4	4	4	4	4	4	4	4	4	4	4	4	5	5	5	5
QUAN CONCRETE CF/LF	24.2	34.6	25.5	36.2	26.8	37.7	29.3	40.1	30.3	41.9	32.2	45.4	34.5	49.8	40.7	54.2	45.4	59.9
QUAN REINFORCEMENT LBS/LF	271	331	278	339	295	362	353	409	365	420	402	413	415	424	440	471	468	534

SPAN FT.	14															
HEIGHT FT.	7		8		9		10		11		12		13		14	
MAXIMUM EARTH COVER FT.	10	20	10	20	10	20	10	20	10	20	10	20	10	20	10	20
CONC. ROOF T1 IN.	9*	14	9*	14	9*	14	9*	14	10	14	10	14	10*	14	11	14
CONC. WALLS T2 IN.	9*	11	9*	11*	9*	11*	10	12*	10*	14	11*	15	12*	16*	13*	17*
CONC. INVERT T3 IN.	10	14*	10	14*	10	14*	10	14*	10*	14*	10*	15	11	15	11*	15
REINFORCEMENT SPACING IN.	10	9	10	9	10	8	10	8	10	8	8	10	10	10	10	9
'A' ⑥ BAR NO.	7	7	7	7	7	7	7	7	7	7	6	7	6	7	6	7
'B' BAR NO.	6	7	7	7	7	7	7	7	7	7	6	8	7	8	7	8
'B' DIMENSION 'B' FT.-IN.	2-9	4-2	3-4	4-4	3-4	4-6	3-4	4-6	3-6	4-6	3-6	4-6	3-6	4-6	4-9	6
'B' DIMENSION 'BW' FT.-IN.	6-5	7	7	8-4	7	8-4	6	6	6	6	6	6	5	6	4-6	6
'C' BAR NO.	7	7	7	7	7	7	7	7	7	7	7	8	8	8	8	8
'C' DIMENSION 'C' FT.-IN.	4	4-2	6-9	6-9	5-10	5-10	6	6-4	8-11	6-4	8-11	6-4	8-11	6-4	8-11	6-4
'E' ⑤ BAR NO.	4	4	4	4	4	4	4	4	4	4	4	5	6	6	6	6
QUAN CONCRETE CF/LF	36.2	51.0	37.8	53.1	39.5	54.9	41.9	58.7	45.9	64.1	49.9	69.5	55.6	75.8	61.6	81.3
QUAN REINFORCEMENT LBS/LF	374	471	449	522	446	587	449	580	492	596	537	605	564	634	604	759

'D' BARS, FOR EARTH COVERS OF 2' AND LESS TO BE PLACED IN TOP SLAB ONLY

SPAN	5'	6'	7'	8'	10'	12'	14'
NUMBER OF BARS	6	7	8	9	10	12	16

SHEET 2 OF 2

NEVADA DEPARTMENT OF TRANSPORTATION

SINGLE RCB CULVERTS

Signed Original On File B-20.1.2.1 (502,505)
CHIEF BRIDGE ENGINEER ADOPTED 11/70 REVISION 1/09

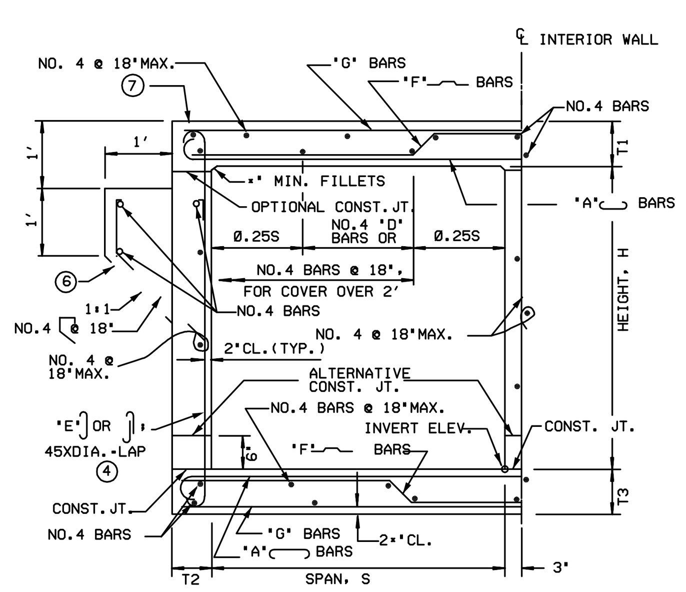

TYPICAL SECTION - SPANS 5' THRU 8'

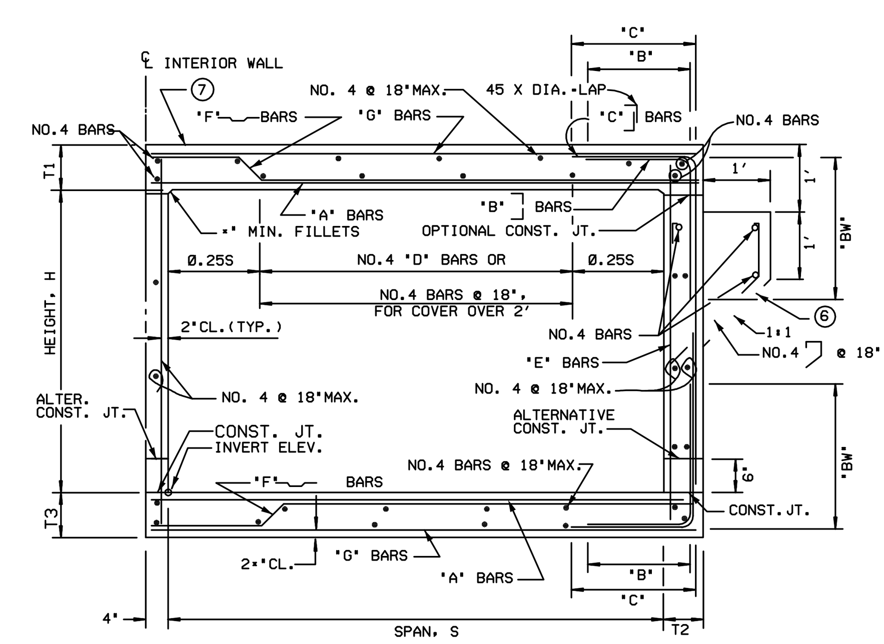

TYPICAL SECTION - SPANS 10' THRU 14'

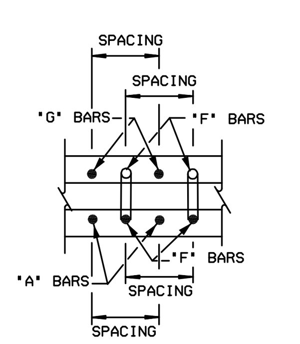

ROOF SECTION
SPANS 5' THRU 8'
INVERT SIMILAR

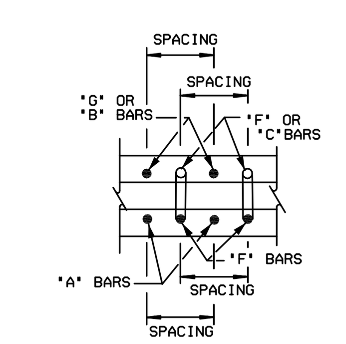

ROOF SECTION
SPANS 10' THRU 14'
INVERT SIMILAR

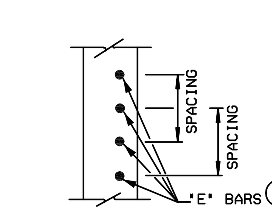

EXTERIOR WALL SECTION
SPANS 5' THRU 8'

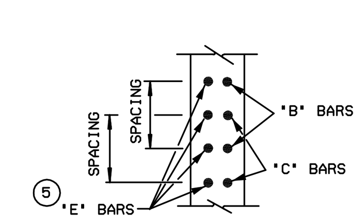

EXTERIOR WALL SECTION
SPANS 10' THRU 14'

NOTES:

① FOR BOXES WITH SPAN OR HEIGHT LESS THAN ANY OF THOSE SHOWN IN TABLE, USE NEXT GREATER SIZE BOX CONCRETE DIMENSIONS AND REINFORCEMENT, MAKE NECESSARY CHANGES IN BAR LENGTHS AND QUANTITIES.

② FOR BOXES WITH SPAN OR HEIGHT OR COVER GREATER THAN THOSE SHOWN IN TABLES, A SPECIAL DESIGN IS REQUIRED.

③ QUANTITIES ARE APPROXIMATE AND FOR DESIGN PURPOSES ONLY.

④ IT IS PERMISSIBLE TO ELIMINATE THE 180° HOOKS ON EVERY OTHER 'E' BAR.

⑤ 'E' BARS ARE AT HALF SPACING.

⑥ PROVIDE PAVING NOTCH WHEN TOP IS EXPOSED AND WHERE P.C.C. PAVEMENT OR APPROACH SLAB IS USED. ADJUST THE QUANTITIES.

⑦ WHEN TOP IS EXPOSED, THE TOP SLAB CONCRETE SHALL BE 'EA', F'C=4500 PSI, OR 'A', F'C=4000 PSI, AS DETERMINED BY THE ENGINEER. IF 'EA' CONCRETE IS TO BE USED, THE TOP SLAB REINFORCING STEEL SHALL HAVE AN EPOXY COATING.

NOTE: THIS PLAN SHEET MAY BE USED FOR MULTIPLE CELL CULVERTS BY MAKING NECESSARY ADJUSTMENTS.

SHEET 1 OF 2

NEVADA DEPARTMENT OF TRANSPORTATION

DOUBLE RCB CULVERTS

Signed Original On File B-20.1.3 (502)
CHIEF BRIDGE ENGINEER ADOPTED 11/70 REVISION 1/09

SPAN FT.	5						6							
HEIGHT FT.	3		4		5		3		4		5		6	
MAXIMUM EARTH COVER FT.	10	20	10	20	10	20	10	20	10	20	10	20	10	20
CONC ROOF T1 IN.	7	7*	7	7*	7	7*	7	9	7	9	7	9	7	9
CONC EXTERIOR WALL T2 IN.	6	6	6	7	6*	7*	6	6	6	7	6*	8	7	8*
CONC INVERT T3 IN.	7	8	7	8	7	8	7	9	7	9	7	9	7	9
REINF SPACING IN.	11*	14	11*	14	11*	15	11*	12	11*	12	11*	12	11*	12
REINF 'G' BAR NO.	4	7	4	7	4	7	6	7	6	7	6	7	6	7
REINF 'F' BAR NO.	5	5	5	5	5	5	5	5	5	5	5	5	5	5
REINF 'A' BAR NO.	6	4	6	4	6	4	7	4	7	4	7	4	7	4
REINF 'E' ⑤ BAR NO.	4	5	5	6	5	7	4	5	4	6	5	6	6	7
QUAN CONCRETE CF/LF	17.8	19.3	19.3	21.6	21.3	23.8	20.1	24.6	21.6	27.0	23.6	29.7	25.8	32.2
QUAN REINFORCEMENT LBS/LF	122	121	134	137	145	162	186	162	192	179	206	190	227	212

SPAN FT.	7										8											
HEIGHT FT.	3		4		5		6		7		3		4		5		6		7		8	
MAXIMUM EARTH COVER FT.	10	20	10	20	10	20	10	20	10	20	10	20	10	20	10	20	10	20	10	20	10	20
CONC ROOF T1 IN.	7*	10	7*	10	7*	10	7*	10	8	10	8	11	8	11	8	11	8	11	8	11	8	11
CONC EXTERIOR WALL T2 IN.	6	6	6	7	6*	7*	7	9	8	9*	6	7*	6	7*	6*	8	7	9	8	10	8*	11
CONC INVERT T3 IN.	7*	10*	7*	10*	7*	10*	7*	10*	7*	10*	8	11*	8	11*	8	11*	8	11*	8	11*	8	11*
REINF SPACING IN.	11	10*	11	10*	11	10*	11	10*	11	10*	9	10	9	10	9	10	9	10	9	10	9	10
REINF 'G' BAR NO.	6	7	6	7	6	7	6	7	6	7	7	7	7	7	7	7	7	7	7	7	7	7
REINF 'F' BAR NO.	6	5	6	5	6	5	6	5	6	5	5	5	5	5	5	5	5	5	5	5	5	5
REINF 'A' BAR NO.	6	4	6	4	6	4	6	4	6	4	6	4	6	4	6	4	6	4	6	4	6	4
REINF 'E' ⑤ BAR NO.	4	5	5	5	5	6	6	7	6	7	4	5	4	5	5	6	6	6	6	7	6	7
QUAN CONCRETE CF/LF	23.7	30.8	25.2	33.3	27.2	35.5	29.4	39.1	32.4	41.8	27.8	38.5	29.2	40.1	31.2	42.4	33.4	45.5	36.4	48.9	39.0	52.6
QUAN REINFORCEMENT LBS/LF	207	197	220	208	227	228	252	262	260	276	270	224	283	237	302	266	340	279	350	312	360	326

SPAN FT.	10															
HEIGHT FT.	3		4		5		6		7		8		9		10	
MAXIMUM EARTH COVER FT.	10	20	10	20	10	20	10	20	10	20	10	20	10	20	10	20
CONC ROOF T1 IN.	9	12 1/2	9	12 1/2	9	12 1/2	9	12 1/2	9	12 1/2	9	12 1/2	9 1/2	12 1/2	9 1/2	12 1/2
CONC EXTERIOR WALLS T2 IN.	8	8	8	8	8	8	8	8 1/2	8	9 1/2	8	10 1/2	8 1/2	11 1/2	9 1/2	12 1/2
CONC INVERT T3 IN.	9	12 1/2	9	12 1/2	9	12 1/2	9	12 1/2	9	12 1/2	9	12 1/2	9	12 1/2	9	12 1/2
REINFORCEMENT SPACING IN.	11	7 1/2	11	7 1/2	11	7 1/2	10 1/2	7 1/2	10	8	10	8	10 1/2	8	10 1/2	8 1/2
"g" BAR NO.	7	7	7	7	7	7	7	7	7	7	7	7	7	7	7	7
"f" BAR NO.	7	5	7	5	7	5	6	5	6	5	6	5	6	5	6	5
"a" BAR NO.	4	4	4	4	4	4	4	4	4	4	4	4	4	4	4	4
"b" BAR NO.	5	5	5	5	5	5	4	5	5	5	6	5	6	6	6	6
"b" DIMENSION "B" FT.-IN.	1-9	2-7	1-9	2-7	1-9	2-7	2	2-9	2-3	2-9	2-7	3-1	2-7	3-1	2-7	3-1
"b" DIMENSION "Bw" FT.-IN.	3-6	3-10	3-6	3-10	4	4-11	4	4-11	4	4-11	4	4-11	4	4-11	4	4-11
"c" BAR NO.	5	5	5	5	5	5	6	6	6	6	6	6	7	6	7	6
"c" DIMENSION "C" FT.-IN.	3	2-9	3-0	2-9	3-1	2-9	3-9	3-3	4-6	4-3	5-6	4-6	6	4-9	6	4-9
"e" ⑤ BAR NO.	4	4	4	4	4	4	4	4	4	4	4	4	4	4	5	5
QUAN CONCRETE CF/LF	39.0	51.8	41.0	53.8	42.7	55.6	44.7	58.2	46.7	61.8	48.7	65.6	52.5	70.0	56.3	74.5
QUAN REINFORCEMENT LBS/LF	339	415	349	428	370	454	381	494	418	494	460	510	486	550	518	568

SPAN FT.	12																	
HEIGHT FT.	4		5		6		7		8		9		10		11		12	
MAXIMUM EARTH COVER FT.	10	20	10	20	10	20	10	20	10	20	10	20	10	20	10	20	10	20
CONC ROOF T1 IN.	10	14 1/2	10	14 1/2	10	14 1/2	10	14 1/2	10	14 1/2	10	14 1/2	10	14 1/2	10	14 1/2	10	14 1/2
CONC EXTERIOR WALLS T2 IN.	8	8 1/2	8	8 1/2	8	8 1/2	8	9	8 1/2	10 1/2	9	11 1/2	9 1/2	12 1/2	10	14	11	15
CONC INVERT T3 IN.	10	15	10	15	10	15	10	15	10	15	10	15	10	15	10	15	10	15
REINFORCEMENT SPACING IN.	9	8	9	8	9	8	9	8	8	7 1/2	8	7 1/2	8 1/2	7 1/2	8 1/2	8	8 1/2	8
"g" BAR NO.	7	7	7	7	7	7	7	7	7	7	7	7	7	7	7	7	7	7
"f" BAR NO.	7	7	7	7	7	7	7	7	6	6	6	6	6	6	6	6	6	6
"a" BAR NO.	4	4	4	4	4	4	4	4	4	4	4	4	4	4	4	4	4	4
"b" BAR NO.	5	5	5	5	5	5	5	6	5	6	5	6	6	6	5	6	6	6
"b" DIMENSION "B" FT.- IN.	2-7	3-1	2-7	3-1	2-7	3-1	3	3-2	3-6	3-2	3-6	3-4	3-9	3-4	3-9	3-4	3-9	3-4
"b" DIMENSION "Bw" FT.- IN.	4-1	3-2	4-1	3-2	4-1	3-2	4-1	3-4	4-1	3-4	4-1	3-7	3-9	3-7	3-9	3-7	3-7	3-7
"c" BAR NO.	6	6	6	6	6	6	6	6	6	6	6	6	6	6	7	7	7	7
"c" DIMENSION "C" FT.- IN.	3-10	3-7	3-10	3-7	3-10	3-7	4-6	4-4	5-7	5	6-6	5-2	7-2	5-4	7-5	5-7	7-5	5-7
"e" ⑤ BAR NO.	4	4	4	4	4	4	4	4	4	4	4	4	4	4	5	5	5	5
QUAN CONCRETE CF/LF	51.3	72.4	53.3	73.4	55.0	76.3	57.0	79.1	59.8	83.8	62.7	88.1	65.9	92.7	69.1	98.8	73.7	104
QUAN REINFORCEMENT LBS/LF	505	567	514	577	543	604	563	646	600	663	614	688	627	691	701	749	733	764

SPAN FT.	14															
HEIGHT FT.	7		8		9		10		11		12		13		14	
MAXIMUM EARTH COVER FT.	10	20	10	20	10	20	10	20	10	20	10	20	10	20	10	20
CONC ROOF T1 IN.	11 1/2	16 1/2	11 1/2	16 1/2	11 1/2	16 1/2	11 1/2	16 1/2	11 1/2	16 1/2	11 1/2	16 1/2	11 1/2	16 1/2	11 1/2	16 1/2
CONC EXTERIOR WALLS T2 IN.	8 1/2	9 1/2	8 1/2	10 1/2	9	11 1/2	9 1/2	12 1/2	10 1/2	14	11 1/2	15	12 1/2	16 1/2	13	17 1/2
CONC INVERT T3 IN.	11 1/2	17	11 1/2	17	11 1/2	17	11 1/2	17	11 1/2	17	11 1/2	17	11 1/2	17	11 1/2	17
REINFORCEMENT SPACING IN.	8 1/2	8	8 1/2	8	8 1/2	8	8 1/2	8	8 1/2	8	8 1/2	8	9	8	9	8
"g" BAR NO.	8	8	8	8	8	8	8	8	8	8	8	8	8	8	8	8
"f" BAR NO.	6	6	6	6	6	6	6	6	6	6	6	6	6	6	6	6
"a" BAR NO.	4	4	4	4	4	4	4	4	4	4	4	4	4	4	4	4
"b" BAR NO.	5	6	6	6	5	6	6	6	6	6	6	7	7	7	7	7
"b" DIMENSION "B" FT.- IN.	2-7	2-7	3-3	3-3	4	4	4	4	4-7	4-4	4-7	4-4	4-7	4-4	4-7	4-4
"b" DIMENSION "Bw" FT.- IN.	5	3-9	5	4-6	5	5	5	5	4-9	5-6	4-9	5-6	4-6	5-6	4-4	5-6
"c" BAR NO.	6	6	6	7	7	7	7	7	7	7	7	7	7	7	8	8
"c" DIMENSION "C" FT.- IN.	4-3	3-11	5-6	4-6	7	5	7-9	5-9	8-6	6-3	9	6-9	9-3	6-9	9-3	6-9
"e" ⑤ BAR NO.	4	4	4	4	4	4	4	4	4	4	5	5	5	5	6	6
QUAN CONCRETE CF/LF	71.8	99.7	73.9	104	76.9	108	80.0	113	84.2	119	88.8	124	94.1	131	98.1	137
QUAN REINFORCEMENT LBS/LF	662	710	715	783	756	820	807	846	833	873	881	958	884	978	1002	1110

'D' BARS, FOR EARTH COVERS OF 2' AND LESS TO BE PLACED IN TOP SLAB ONLY

SPAN	5'	6'	7'	8'	10'	12'	14'
• /CELL	5	6	8	10	11	13	15

SHEET 2 OF 2

NEVADA DEPARTMENT OF TRANSPORTATION

DOUBLE RCB CULVERTS

Signed Original On File B-20.1.3.1 (502)
CHIEF BRIDGE ENGINEER ADOPTED 11/70 REVISION 1/09

REV No	DATE	DESCRIPTION	APPROVED

DESIGNED BY: N/A
DRAWN BY: N/A
CHECKED BY: NL
APPROVED BY: NL
SCALE
HORIZ: N.T.S.
VERT: N/A
FIELD BOOK

HDR Engineering, Inc.
9805 Double R Blvd,
Suite 101
Reno, NV 89521
Phone: 775-337-4700

City of Sparks

NORTH TRUCKEE DRAIN REALIGNMENT PHASE 3

STANDARD DETAILS

CITY OF SPARKS, NEVADA, PUBLIC WORKS DEPARTMENT

STATE OF NEVADA PROFESSIONAL ENGINEER NOEL C. LAUGHLIN Exp. 12/31/17 CIVIL No. 10165

5/11/16

SHEET No

DT-4

SHT OF

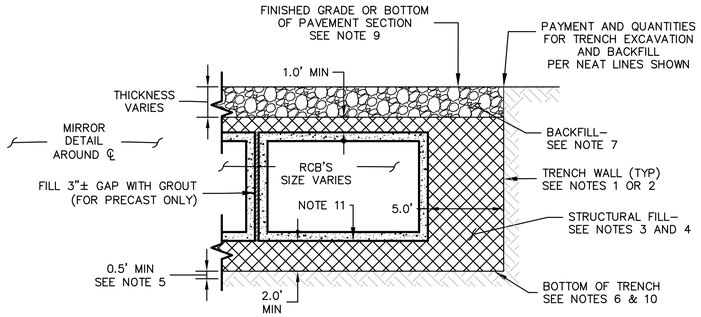

RCB INSTALLATION ADJACENT TO OR IN EXISTING NTD CHANNEL AND STRUCTURES INSTALLATION
"NTD" STA 26+00 TO STA 34+50
CONFLUENCE STRUCTURE 1
CONFLUENCE STRUCTURE 2
HEADWALL "NTD" STA 76+20

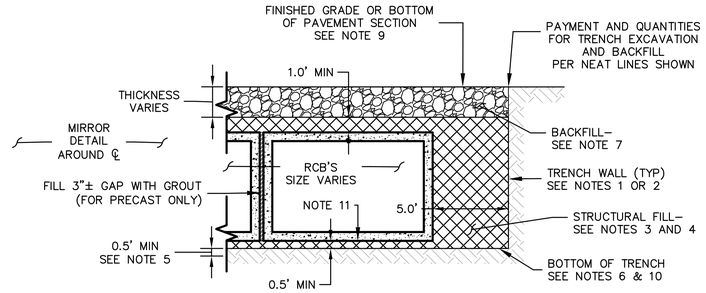

REGULAR RCB INSTALLATION
"NTD" STA 19+07.33 TO STA 26+00
"NTD" STA 34+50 TO STA 55+50
"NTD" STA 57+50 TO STA 74+00

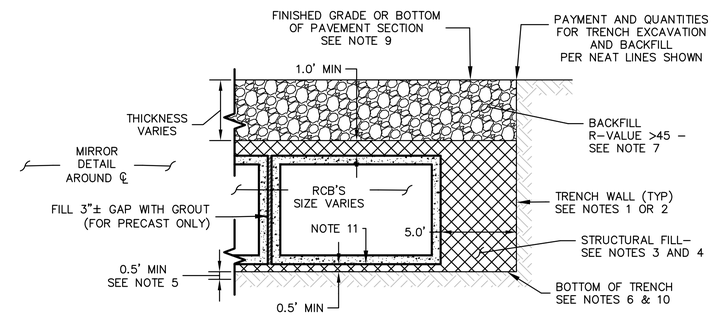

RCB INSTALLATION
"NTD" STA 55+50 TO 57+50

RCB INSTALLATION SECTIONS

N.T.S.

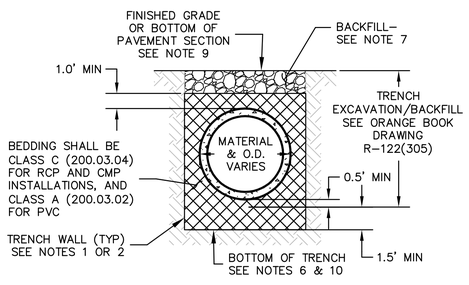

SHALLOW / POOR SOIL PVC & RCP INSTALLATION
"NTD" STA 18+99
"NTD" STA 22+18
"NTD" STA 28+20.68 TO STA 28+84.72
"NTD" STA 28+24.72 TO STA 30+55.27
"NTD" STA 30+55.27 TO STA 37+28.16
"NTD" STA 23+58
"NTD" STA 28+84
"NTD" STA 29+19
"NTD" STA 30+55
"NTD" STA 34+51
"NTD" STA 34+59
"NTD" STA 62+07.84 TO STA 66+30.76
"NTD" STA 72+40 TO STA 73+40
"NTD" STA 59+52.45 TO STA 62+50.44
"NTD" STA 64+22.04 TO STA 65+79.50

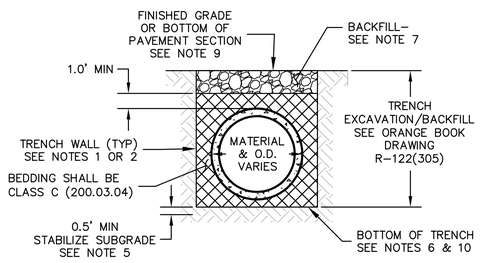

DEEP RCP INSTALLATION
"NTD" STA 19+00 TO STA 21+00
"NTD" STA 19+10
"NTD" STA 66+30.76 TO STA 74+00
"NTD" STA 72+78

PVC & RCP INSTALLATION SECTIONS

N.T.S.

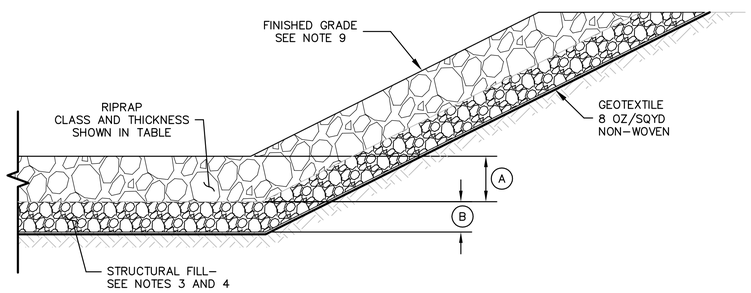

RIPRAP
"NTD" STA 37+28.16 TO STA 37+48.16
"NTD" STA 76+20 TO STA 76+76

RIPRAP CLASS 200.07	A IN.	B IN.	EXTEND OUT FROM END RCP/RCB (FT)
300	24	12	20
400	36	24	60

TYPICAL RIPRAP SECTION

N.T.S.

NOTES:

1. TRENCH WALL FOR CLAYEY SOILS SHALL COMPLY WITH OSHA SOIL TYPE B REQUIREMENTS OR APPROVED VERTICAL SHORING METHOD.
2. TRENCH WALL FOR GRANULAR SOILS SHALL COMPLY WITH OSHA SOIL TYPE C REQUIREMENTS OR APPROVED VERTICAL SHORING METHOD.
3. MAXIMUM DENSITY, IN–PLACE DENSITY, AND PLACEMENT OF BACKFILL SHALL BE PER STANDARD SPECIFICATIONS FOR PUBLIC WORKS CONSTRUCTION (ORANGE BOOK) AND CONDITIONED WITHIN 2% OF OPTIMUM MOISTURE. EXCAVATED MATERIAL MAY BE USED AS BACKFILL (EITHER DIRECTLY OR BLENDED) IF ALL SPECIFICATION CRITERIA ARE MET.
4. STRUCTURAL FILL PER 200.01.09, COMPACT TO 90% MAX DRY DENSITY ASTM D1557.
5. SCARIFY NATIVE MATERIAL, MOISTURE CONDITION TO WITHIN 2% OF OPTIMUM FOR GRANULAR SOILS AND AT OR ABOVE OPTIMUM FOR CLAYEY MATERIAL. COMPACT TO 90% PER ASTM D1557.
6. IF EXISTING SUBGRADE IS COARSE GRANULAR (LESS THAN 70% PASSING 3/4–INCH SIEVE), PROOF ROLL WITH 5 PASSES (MIN) OF 10–TON ROLLER.
7. CLASS E BACKFILL PER 200.03.06, COMPACT TO 90% MAX DRY DENSITY ASTM D1557.
8. NOT USED
9. SEE GRADING PLAN SHEETS AND TYPICAL ROAD CROSS SECTIONS SHEETS.
10. WATER SHALL NOT BE ALLOWED TO POND IN BOTTOM OF TRENCH. PRIOR TO PLACEMENT OF STRUCTURAL FILL, BOTTOM OF TRENCH SHALL BE FIRM, UNYIELDING, AND SHALL NOT PUMP OR DEFLECT UNDER LOADS. ADDITIONAL OVEREXCAVATION AND SUBGRADE STABILIZATION EFFORTS MAY BE REQUIRED TO ACHIEVE A FIRM AND UNYIELDING SURFACE.

REV No	DATE	DESCRIPTION	APPROVED

DESIGNED BY: N/A
DRAWN BY: N/A
CHECKED BY: NL
APPROVED BY: NL
SCALE
HORIZ: N.T.S.
VERT: N/A
FIELD BOOK

HDR Engineering, Inc.
9805 Double R Blvd.
Suite 101
Reno, NV 89521
Phone: 775–337–4700

City of Sparks

NORTH TRUCKEE DRAIN REALIGNMENT PHASE 3

STANDARD DETAILS

CITY OF SPARKS, NEVADA, PUBLIC WORKS DEPARTMENT

STATE OF NEVADA PROFESSIONAL ENGINEER NOEL N. LAUCHUN Exp. 12/31/17 CIVIL No. 10169 5/11/16

SHEET No

DT-5

SHT OF

C:\pwworking\phx\d0351221\DT-01x.dwg 05/02/16 7:06am POXBORRO

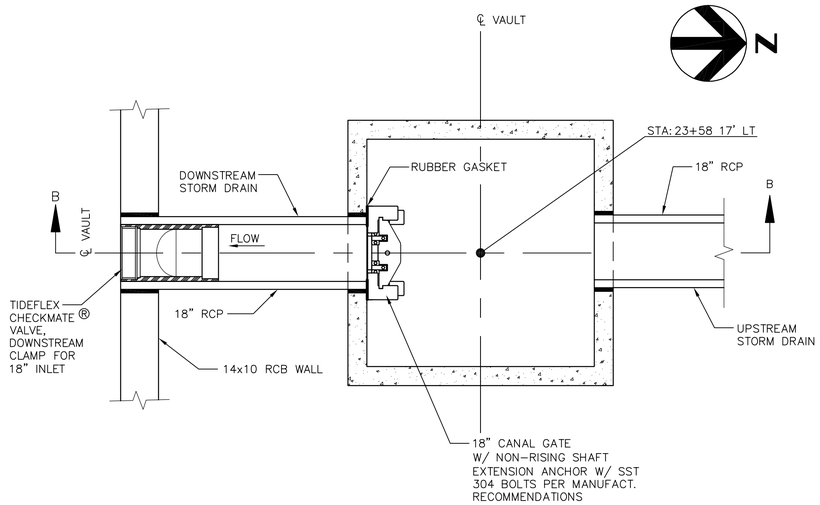

PLAN VIEW - TOP REMOVED

N.T.S.

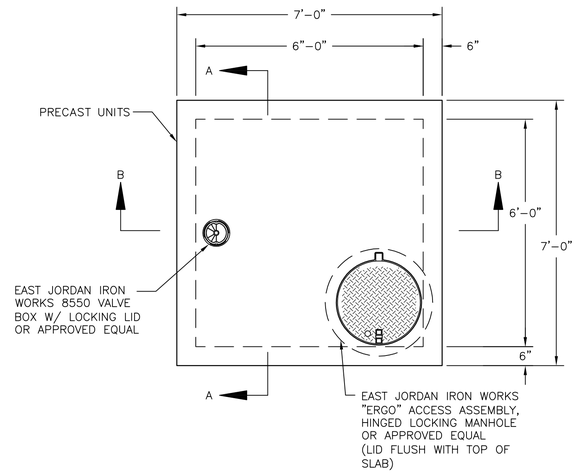

PLAN VIEW

N.T.S.

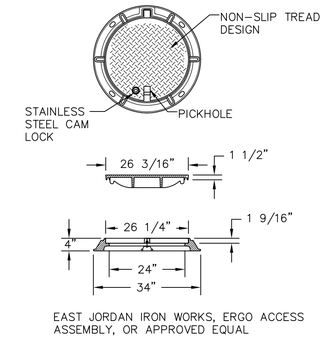

HINGED LOCKING MANHOLE DETAIL

N.T.S.

GENERAL NOTES

1. THE PRECAST CONCRETE VAULT IS TO BE DESIGNED ACCORDING TO THE DESIGN SPECIFICATIONS AND DESIGN LOADS GIVEN ON SHEET S-1.
2. THE WALL AND SLAB THICKNESSES DIMENSIONS CAN VARY FROM THOSE SHOWN AS REQUIRED BY THE DESIGN, OR FABRICATOR'S PREFERENCE.
3. THE CONTRACTOR SHALL SUBMIT TWO SETS OF THE STRUCTURAL DESIGN ANALYSIS AND SHOP DRAWINGS FOR THE PRECAST VAULT FOR REVIEW AND APPROVAL, STAMPED BY A PROFESSIONAL ENGINEER REGISTERED IN NEVADA.

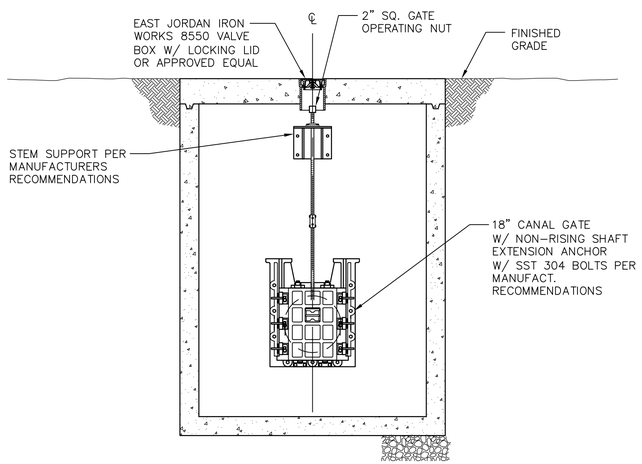

SECTION A-A

N.T.S.

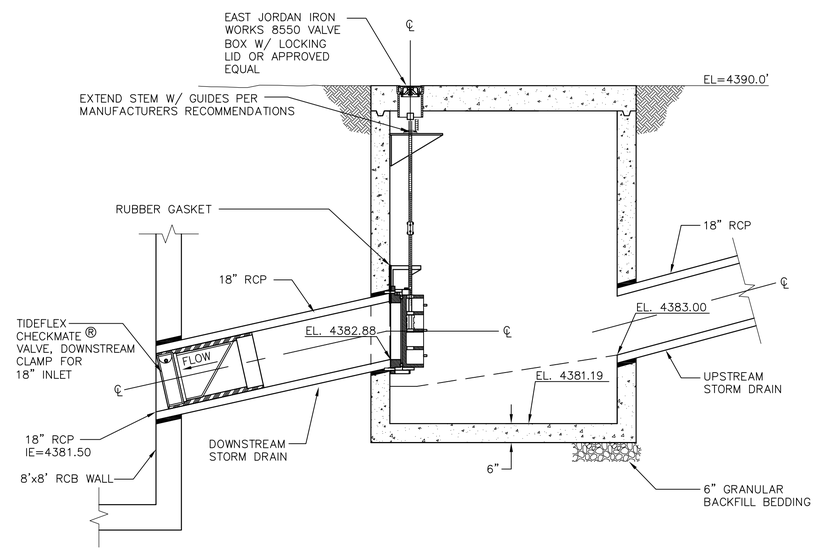

SECTION B-B

N.T.S.

STORM DRAIN BACKFLOW PREVENTION
VAULT DETAILS "NTD" STA 23+58

N.T.S.

REV No	DATE	DESCRIPTION	APPROVED

DESIGNED BY: GAA
DRAWN BY: KG
CHECKED BY: GAA/NL
APPROVED BY: NL
SCALE
HORIZ: N.T.S.
VERT: N/A
FIELD BOOK

HDR Engineering, Inc.
9805 Double R Blvd.
Suite 101
Reno, NV 89521
Phone: 775-337-4700

City of Sparks

NORTH TRUCKEE DRAIN REALIGNMENT PHASE 3

STORM DRAIN BACKFLOW PREVENTION
VAULT DETAILS STA 23+58

CITY OF SPARKS, NEVADA, PUBLIC WORKS DEPARTMENT

STATE OF NEVADA
NOEL-HUGH LAUCHLIN
Exp. 12/31/17
CIVIL
No. 10165
PROFESSIONAL ENGINEER
5/11/16

SHEET No

DT-6

SHT OF

C:\pwworking\phx\d0351221\DT-01x.dwg 05/02/16 7:07am POXBORRO

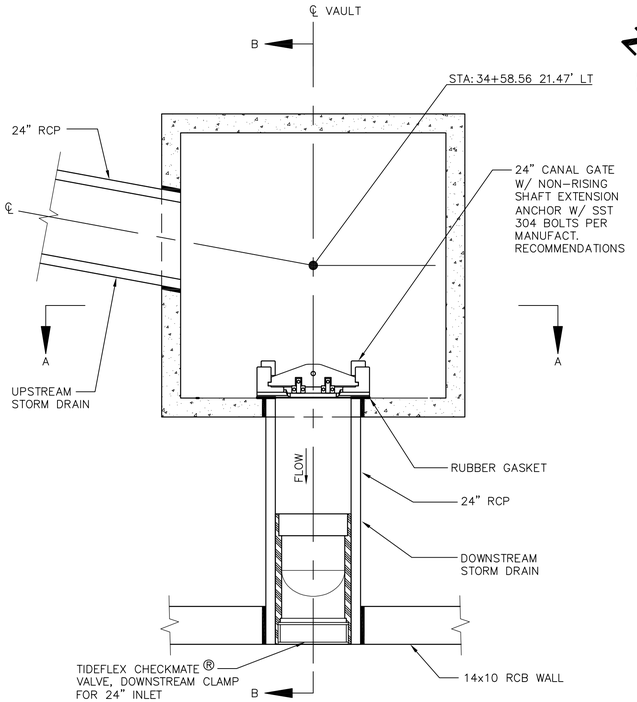

PLAN VIEW - TOP REMOVED

N.T.S.

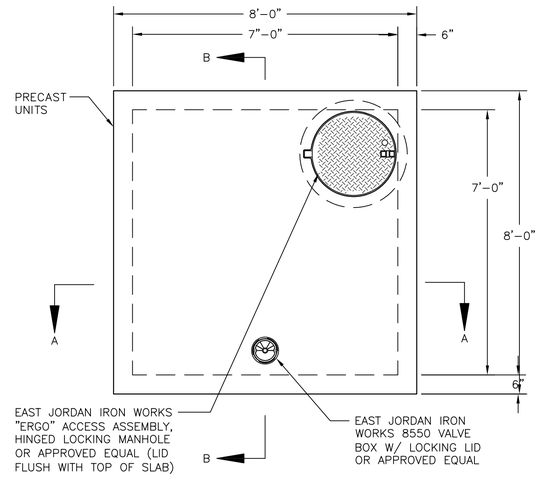

PLAN VIEW

N.T.S.

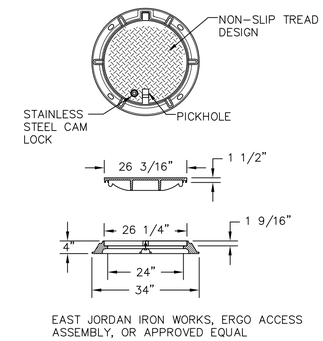

HINGED LOCKING MANHOLE DETAIL

N.T.S.

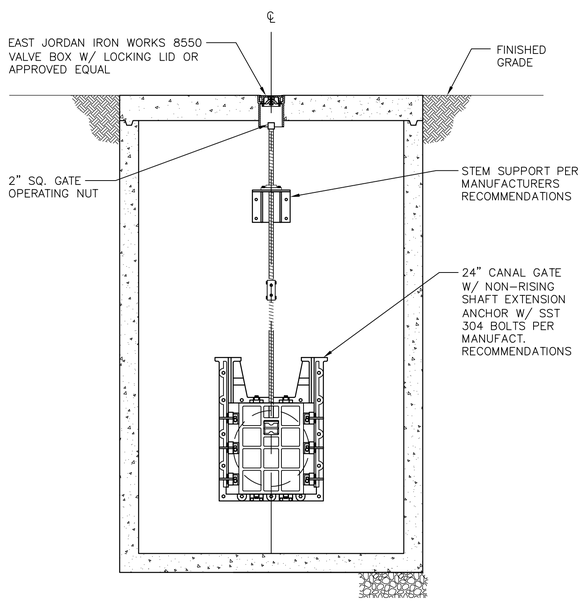

SECTION A-A

N.T.S.

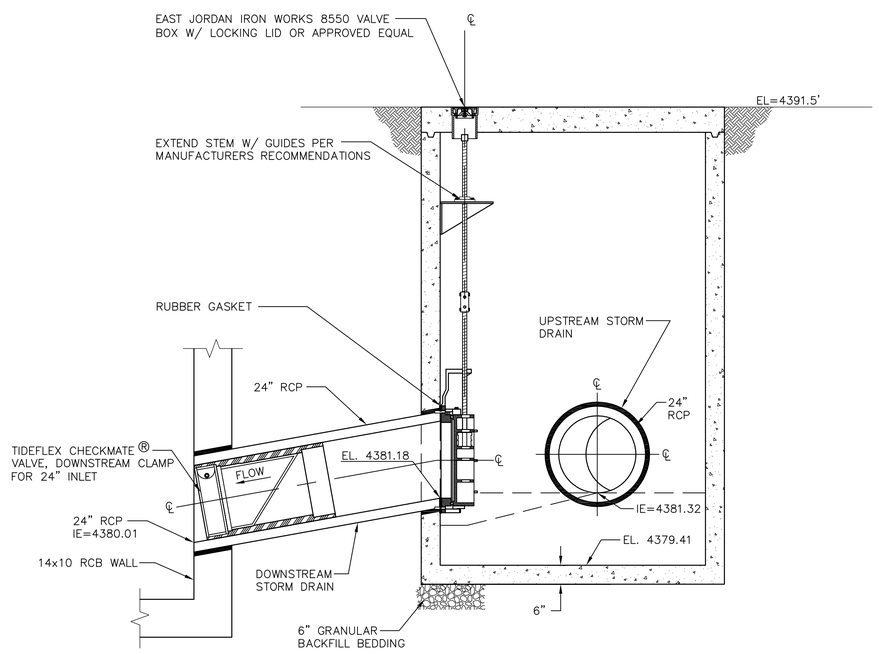

SECTION B-B

N.T.S.

STORM DRAIN BACKFLOW PREVENTION VAULT DETAILS "NTD" STA:34+58.56

N.T.S.

GENERAL NOTES

1. THE PRECAST CONCRETE VAULT IS TO BE DESIGNED ACCORDING TO THE DESIGN SPECIFICATIONS AND DESIGN LOADS GIVEN ON SHEET S-1.
2. THE WALL AND SLAB THICKNESSES DIMENSIONS CAN VARY FROM THOSE SHOWN AS REQUIRED BY THE DESIGN, OR FABRICATOR'S PREFERENCE.
3. THE CONTRACTOR SHALL SUBMIT TWO SETS OF THE STRUCTURAL DESIGN ANALYSIS AND SHOP DRAWINGS FOR THE PRECAST VAULT FOR REVIEW AND APPROVAL, STAMPED BY A PROFESSIONAL ENGINEER REGISTERED IN NEVADA.

REV No	DATE	DESCRIPTION	APPROVED

DESIGNED BY: GAA
DRAWN BY: KG
CHECKED BY: GAA/NL
APPROVED BY: NL
SCALE
HORIZ: N.T.S.
VERT: N/A
FIELD BOOK

HDR Engineering, Inc.
9805 Double R Blvd.
Suite 101
Reno, NV 89521
Phone: 775-337-4700

City of Sparks

NORTH TRUCKEE DRAIN REALIGNMENT PHASE 3

STORM DRAIN BACKFLOW PREVENTION
VAULT DETAILS STA 34+59

CITY OF SPARKS, NEVADA, PUBLIC WORKS DEPARTMENT

STATE OF NEVADA
NOEL LAUGHLIN
Exp. 12/31/17
CIVIL
No. 10165
PROFESSIONAL ENGINEER
5/11/16

SHEET No
DT-7
SHT OF

C:\pwworking\phx\d0351221\DT-01x.dwg 05/02/16 7:07am POXBORRO

GENERAL NOTES

1. DESIGN SPECIFICATIONS:
AASHTO "STANDARD SPECIFICATIONS FOR HIGHWAY BRIDGES, 17th EDITION 2002" WITH INTERIMS TO DATE. LOAD FACTOR DESIGN METHOD WAS USED.

USACE ENGINEER MANUALS:
EM 1110-2-2100 STABILITY ANALYSIS OF CONCRETE STRUCTURES
EM 1110-2-2104 STRENGTH DESIGN FOR REINFORCED-CONCRETE HYDRAULIC STRUCTURES
EM 1110-2-2502 RETAINING AND FLOOD WALLS
EM 1110-2-2902 CONDUITS, CULVERTS AND PIPES
EM 1110-2-6053 ENGINEERING AND DESIGN-EARTHQUAKE DESIGN AND EVALUATION OF CONCRETE HYDRAULIC STRUCTURES
EM-1110-2-307 FLOTATION STABILITY CRITERIA FOR CONCRETE HYDRAULIC STRUCTURES

2. CONSTRUCTION SPECIFICATIONS:
STATE OF NEVADA DEPARTMENT OF TRANSPORTATION "STANDARD SPECIFICATIONS FOR ROAD AND BRIDGE CONSTRUCTION, 2001," EXCEPT AS NOTED BELOW AND IN THE SPECIAL PROVISIONS.

3. DESIGN LOADS:
IN ACCORDANCE WITH DESIGN SPECIFICATIONS AND AS FOLLOWS:

LIVE LOAD: AASHTO HS20-44 OR ALTERNATE MILITARY LOADING. IMPACT FOR TOP SLAB IS 30% FOR UP TO 3'-0" COVER. NO IMPACT FOR OVER 3'-0" COVER. A TWO FOOT LIVE LOAD SURCHARGE IS ADDED TO THE LATERAL LOAD FOR RCB WALLS WITH LESS THAN 2'-0" COVER ON TOP SLAB.

EARTH LOAD: THE FOLLOWING TABLES CONTAIN THE EQUIVALENT FLUID PRESSURES USED, BASED ON THE GEOTECHNICAL REPORT REFERENCED BELOW. THE PRESSURE VALUE USED ON INDIVIDUAL STRUCTURES WAS BASED ON EACH STRUCTURE'S DESIGN CONDITIONS.

LATERAL EARTH PRESSURES WITH HYDROSTATIC PRESSURES	
EARTH PRESSURE	EQUIVALENT FLUID PRESSURE
ACTIVE	80
AT-REST	90
PASSIVE	250

LATERAL EARTH PRESSURES WITHOUT HYDROSTATIC PRESSURES	
EARTH PRESSURE	EQUIVALENT FLUID PRESSURE
ACTIVE	35
AT-REST	55
PASSIVE	390

HYDRAULIC PRESSURE LOADS: BUOYANCY PRESSURE ON BURIED CULVERTS BASED ON GROUND WATER LEVEL 6'-0" ABOVE FLOWLINE AND UNIT WEIGHT OF WATER (62.4 PCF). INTERNAL WATER PRESSURE ON MAIN CULVERTS BASED ON 9'-0" MAXIMUM HYDRAULIC GRADE LINE ABOVE TOP SLABS.

LOAD FACTORS: LOAD FACTORS FOR LOAD COMBINATIONS BASED ON TABLE 3.22.1A IN THE AASHTO DESIGN SPECIFICATIONS.

4. CONCRETE:
ALL CONCRETE SHALL BE CLASS AA MODIFIED, WITH AN ULTIMATE CONCRETE COMPRESSIVE STRENGTH OF f'c = 4000 psi AT 28 DAYS UNLESS OTHERWISE NOTED. THE CONCRETE FOR CAST-IN-PLACE REINFORCED CONCRETE BOXES SHALL BE f'c = 3250 psi AT 28 DAYS.

5. REINFORCING STEEL:
ALL REINFORCING STEEL TO BE ASTM A615 GRADE 60 OR ASTM A706 GRADE 60.

DIMENSIONS RELATING TO BAR SPACING ARE CENTER TO CENTER. BENDING DIMENSIONS ARE FROM OUT TO OUT OF THE BARS. THE ENGINEER MUST APPROVE ANY ADJUSTMENTS TO REINFORCING STEEL LENGTHS OR SPACING.

BAR MARK DESIGNATIONS: WHERE BAR MARKS ARE USED, THE BAR SIZES THREE (3) TO NINE (9) ARE INDICATED BY THE FIRST NUMBER OF THE MARK, BAR SIZES TEN (10) AND LARGER ARE INDICATED BY THE FIRST TWO NUMBERS. FOR THE BENT BARS AN ARBITRARY LETTER IS USED AT THE BEGINNING OF THE BAR MARK. AFTER THE BAR SIZE THE FOLLOWING NUMBERS INDICATE THE BAR LENGTH, WITH THE FIRST TWO NUMBERS REPRESENTING FEET AND THE LAST ONE OR TWO NUMBERS REPRESENTING INCHES. BARS ENDING WITH THE LETTER E SHALL BE EPOXY COATED. BAR ENDING IN THE LETTER D SHALL BE DOWELED AND SET IN EPOXY.

STANDARD BAR LAPS		
BAR NO. SIZE	UNCOATED	EPOXY COATED
4	20"	23"
5	26"	30"
6	31"	36"
7	39"	45"
8	51"	59"
9	59"	67"
10	75"	85"
11	91"	102"

6. FOUNDATIONS:
REFER TO "GEOTECHNICAL INVESTIGATION REPORT PROPOSED NORTH TRUCKEE DRAIN REALIGNMENT, SPARKS, NEVADA", PREPARED BY KLEINFELDER WEST, INC. DATED NOVEMBER 11, 2009.

THE RCB CULVERT AND OTHER DRAINAGE STRUCTURES WHERE DESIGNED FOR AN ALLOWABLE SOIL BEARING PRESSURE OF 1500 PSF. FOR STRUCTURES FOUNDED ON STRUCTURAL BEDDING DOWN TO OUTWASH DEPOSITS AN ALLOWABLE SOIL BEARING PRESSURE OF 3000 PSF WAS USED. THESE ALLOWABLE PRESSURES ARE NET VALUES, WITH THE DEAD LOAD WEIGHT OF THE FOUNDATION AND BACKFILL BELOW THE LOWEST GRADE ADJACENT TO THE STRUCTURE NEGLECTED.

7. REINFORCED CONCRETE BOX DESIGNS:
THE CONTRACTOR SHALL HAVE THE OPTION OF FURNISHING PRECAST REINFORCED CONCRETE BOX CULVERTS OR CONSTRUCTING CAST-IN-PLACE REINFORCED CONCRETE BOX CULVERTS WHERE EITHER METHOD IS ALLOWED. DETAILS ON SHEET DT-4 ARE PROVIDED FOR THE STANDARD BOX CULVERTS WHERE THE CAST-IN-PLACE METHOD IS EITHER OPTIONAL OR MANDATORY. PRECAST BOX CULVERTS SHALL BE DESIGNED AND CONSTRUCTED ACCORDING TO THE REQUIREMENTS OF THE SPECIAL PROVISIONS. THE METHOD OF CONSTRUCTION FOR BOX CULVERTS IS TO BE SELECTED BASED ON THE FOLLOWING TABLE :

STATION LOCATIONS	RCB DESCRIPTION	MANDATORY CAST-IN-PLACE	MANDATORY PRECAST	OPTION CAST-IN-PLACE OR PRECAST
"W" STA. 218+70.35 TO STA. 219+09.80 LT.	6'x6'	X**		
"W" STA. 218+70.35 TO STA. 219+07.72 RT.	6'x6'	X**		
"W" STA. 219+09.80 TO STA. 219+42.43 LT.	6'x6'			X
"W" STA. 219+07.72 TO STA. 219+35.18 RT.	6'x6'			X
"NTD" STA. 19+07.33 TO STA. 19+22.98	10'x4'	X		
"NTD" STA. 19+66.04 TO STA. 27+20.50	DOUBLE 8'x8'			X*
"E" STA. 325+18.61 TO STA. 327+28.19	DOUBLE 8'x8'	X**		
"NTD" STA. 27+46.50 TO STA. 53+50.00	DOUBLE 14'x10'			X

NOTES FOR THE TABLE:
* FOR THE CAST-IN-PLACE DOUBLE 8'X8' RCB USE AN 8" INTERIOR WALL INSTEAD OF THE 6" INTERIOR WALL SHOWN IN THE DETAIL ON SHEET DT-4, AND WITH NO. 4 BARS AT 18" EACH WAY IN EACH FACE.

** FOR THESE CAST-IN-PLACE RCB'S SEE SHEET R-1 FOR DETAILS.

8. REINFORCED CONCRETE BOX CONNECTIONS TO CAST-IN-PLACE STRUCTURES:
EXTEND THE LONGITUDINAL RCB REINFORCEMENT, OR ADD #4 BARS AT 12" SPACINGS, CENTERED IN ALL WALLS AND SLABS, CAST 18" MIN. INTO RCB, A MINIMUM OF 10" INTO THE CAST-IN-PLACE SECTION.

Avoid cutting underground utility lines. It's costly.
Call before you Dig.
1-800-227-2600
UNDERGROUND SERVICE ALERT (USA)

SAFETY ALERT
Call before you Overhead
775-834-7590
NV Energy Construction Line
24hrs. Prior Notice Required
OVERHEAD SERVICE ALERT

REV No	DATE	DESCRIPTION	APPROVED

DESIGNED BY: GAA
DRAWN BY: CLG
CHECKED BY:
APPROVED BY:
SCALE
HORIZ:
VERT:
FIELD BOOK

HDR Engineering, Inc.
9805 Double R Blvd.
Suite 101
Reno, NV 89521
Phone: 775-337-4700

City of Sparks

NORTH TRUCKEE DRAIN REALIGNMENT PHASE 3

STRUCTURE GENERAL NOTES

CITY OF SPARKS, NEVADA, PUBLIC WORKS DEPARTMENT

STATE OF NEVADA
GARY A. ANDERSON
Exp. 12/31/2016
CIVIL
No. 5522
PROFESSIONAL ENGINEER
5/11/16

SHEET No
S-1
SHT OF

C:\pwworking\phx\d0351221\S-1.dwg 04/29/16 10:59am POXBORRO

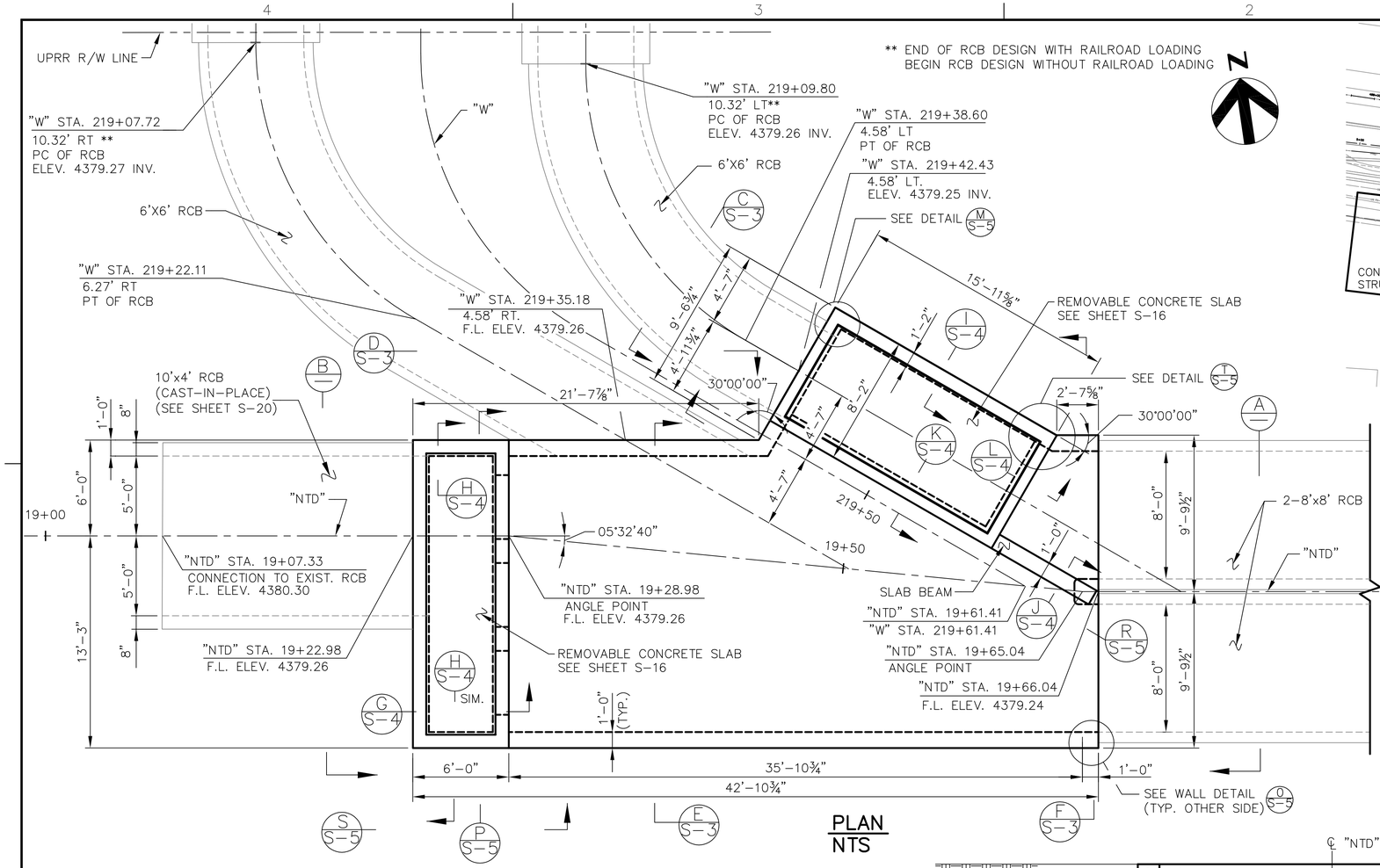

PLAN
NTS

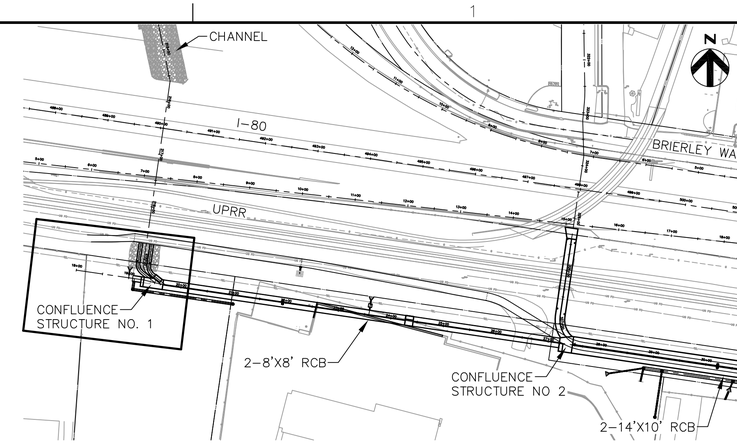

KEY MAP

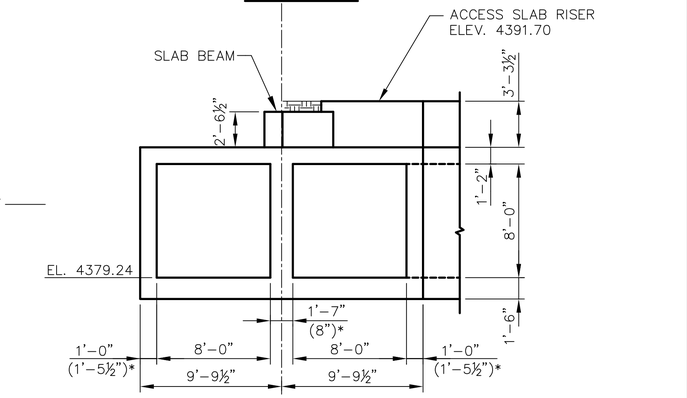

ELEVATION A
NTS

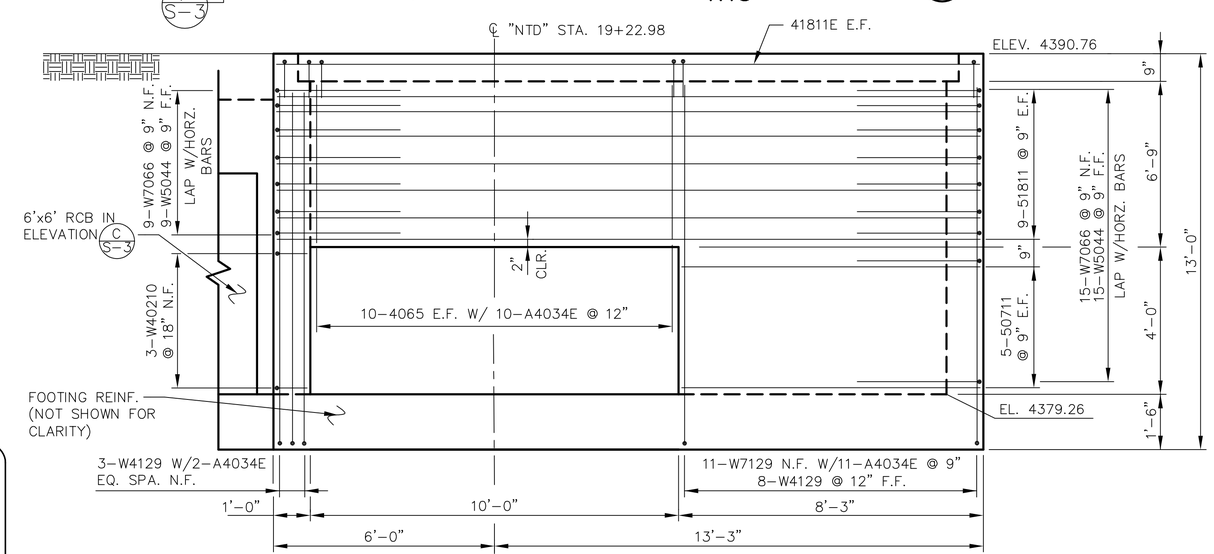

ELEVATION B
NTS

QUANTITIES		
ITEM	W/ CAST-IN-PLACE RCB'S	W/ PRECAST RCB'S
CONCRETE (CU.YD.)	124.50	124.50
REINFORCING STEEL (LBS.)	25,250	25,250
REINFORCING STEEL (EPOXY COATED) (LBS.)	365	365
STRUCTURAL STEEL (LBS.)	1580	1580

NOTE:
THE EXTERIOR DIMENSIONS OF THIS STRUCTURE DO NOT CHANGE, AND ARE THE SAME FOR THE BOTH THE CAST-IN-PLACE OR PRECAST RCB OPTIONS.

Avoid cutting underground utility lines. It's costly.
Call before you Dig.
1-800-227-2600
UNDERGROUND SERVICE ALERT (USA)

SAFETY ALERT
Call before you Overhead
775-834-7590
NV Energy Construction Line
24hrs. Prior Notice Required
OVERHEAD SERVICE ALERT

REV No.	DATE	DESCRIPTION	APPROVED

DESIGNED BY: GAA
DRAWN BY: CLG
CHECKED BY:
APPROVED BY:
SCALE
HORIZ:
VERT:
FIELD BOOK

HDR Engineering, Inc.
9805 Double R Blvd.
Suite 101
Reno, NV 89521
Phone: 775-337-4700

City of Sparks

NORTH TRUCKEE DRAIN REALIGNMENT PHASE 3

CONFLUENCE STRUCTURE NO. 1

CITY OF SPARKS, NEVADA, PUBLIC WORKS DEPARTMENT

REGISTERED PROFESSIONAL ENGINEER STATE OF NEVADA GARY A. ANDERSON Exp. 12/31/2016 CIVIL No. 5522 5/11/16

SHEET No
S-2
SHT OF

C:\pwworking\phx\d0351221\S-2.dwg 04/29/16 10:59am POXBORRO

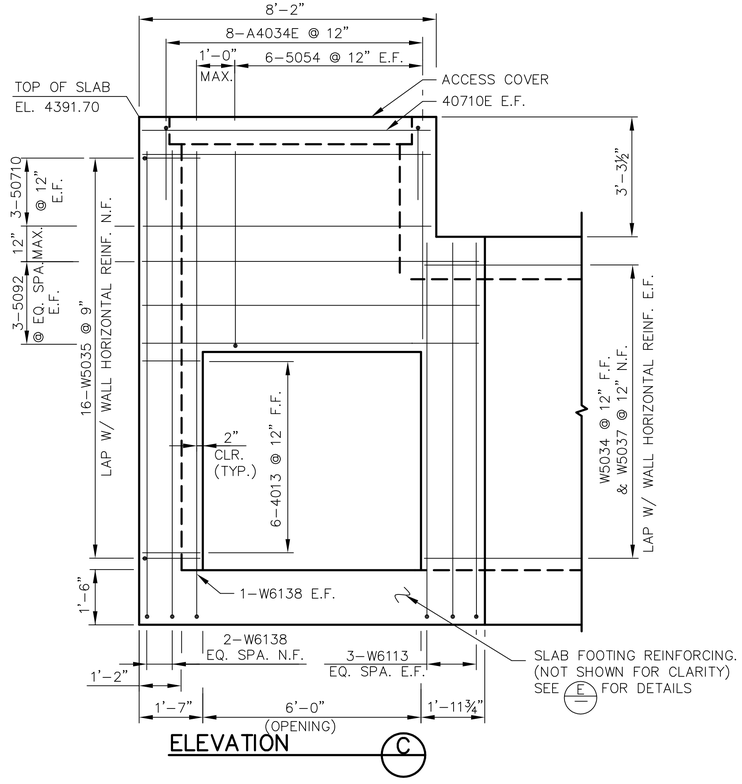

ELEVATION C

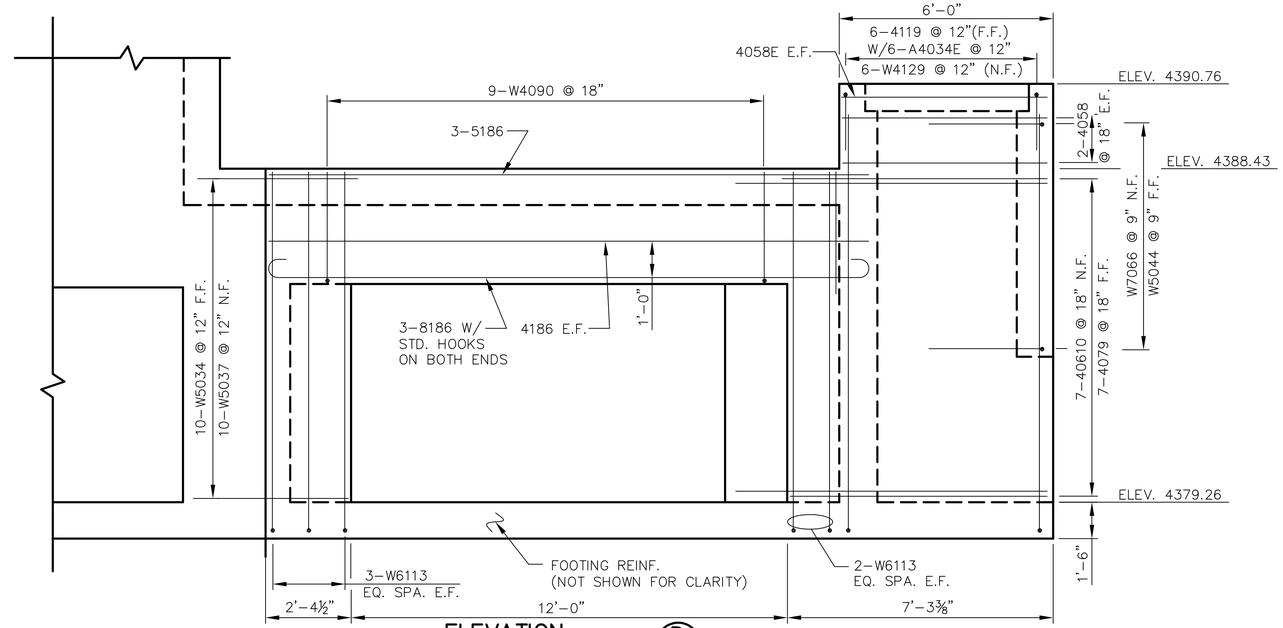

ELEVATION D

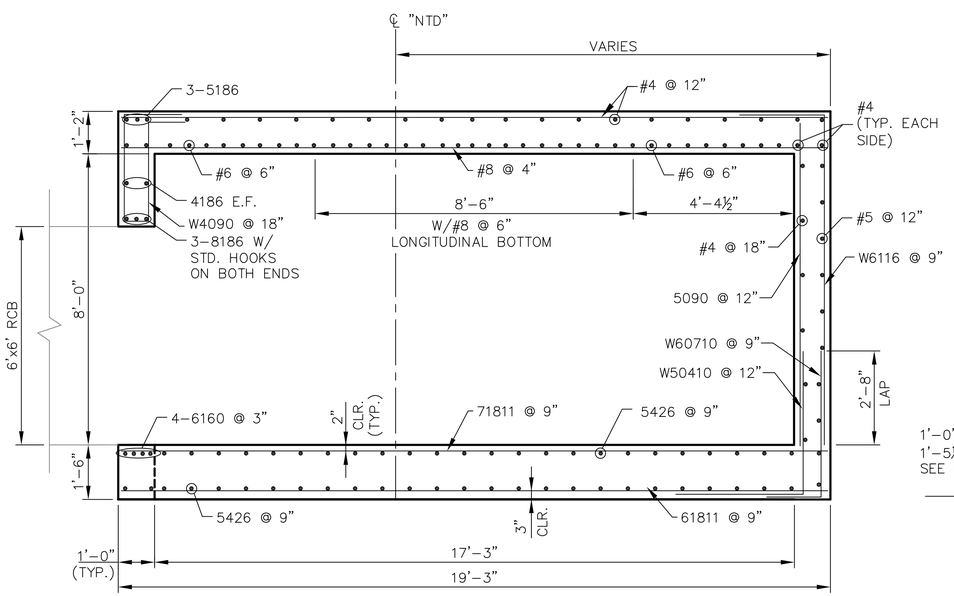

SECTION E

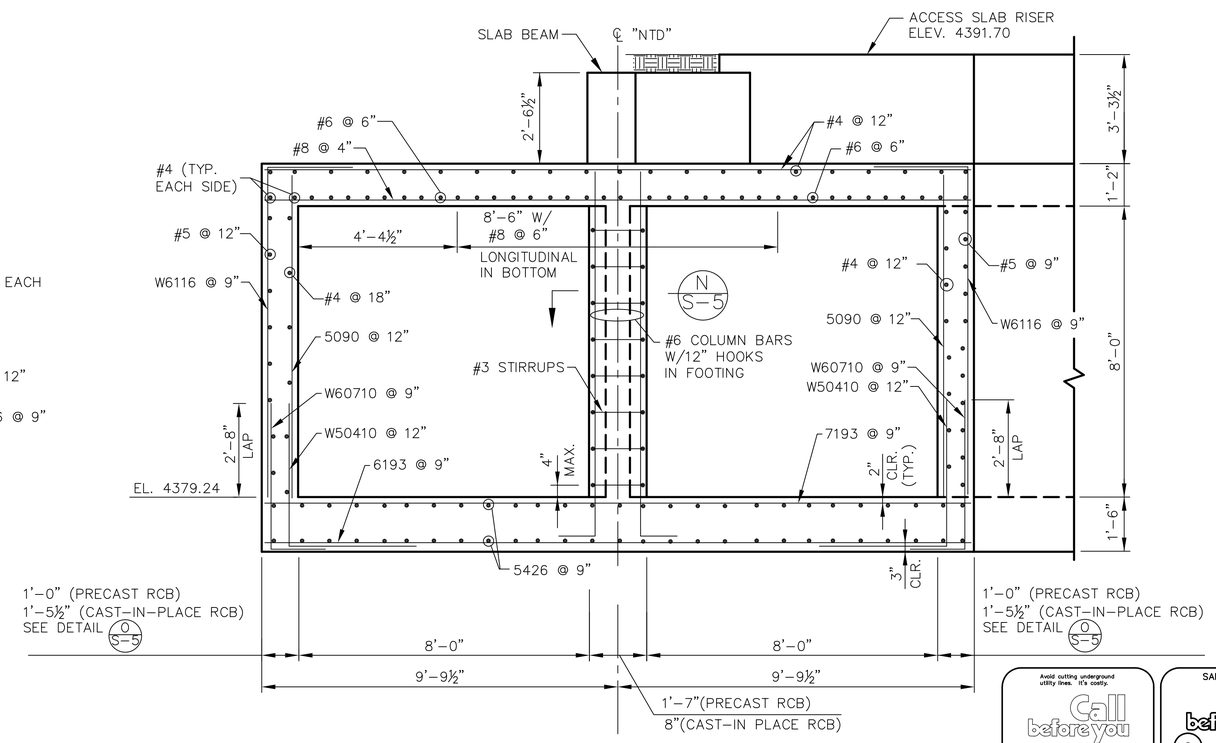

SECTION F

Avoid cutting underground utility lines. It's costly.
Call before you Dig.
1-800-227-2600
UNDERGROUND SERVICE ALERT (USA)

SAFETY ALERT
Call before you Overhead
775-834-7590
NV Energy Construction Line
24hrs. Prior Notice Required
OVERHEAD SERVICE ALERT

REV No.	DATE	DESCRIPTION	APPROVED

DESIGNED BY: MA
DRAWN BY: CLG
CHECKED BY:
APPROVED BY:
SCALE
HORIZ:
VERT:
FIELD BOOK

HDR Engineering, Inc.
9805 Double R Blvd.
Suite 101
Reno, NV 89521
Phone: 775-337-4700

City of Sparks

NORTH TRUCKEE DRAIN REALIGNMENT PHASE 3

CONFLUENCE STRUCTURE NO. 1

CITY OF SPARKS, NEVADA, PUBLIC WORKS DEPARTMENT

STATE OF NEVADA PROFESSIONAL ENGINEER No. 5522 GARY A. ANDERSON Exp. 12/31/2016 CIVIL
5/11/16

SHEET No
S-3
SHT OF

C:\pwworking\phx\d0351221\S-3.dwg 04/29/16 10:59am POXBORRO

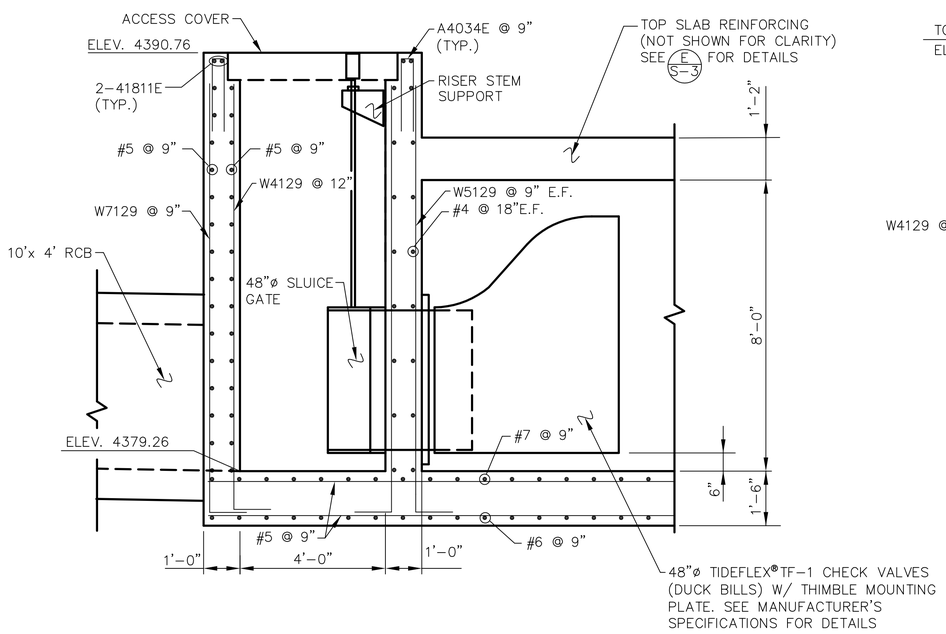

SECTION G

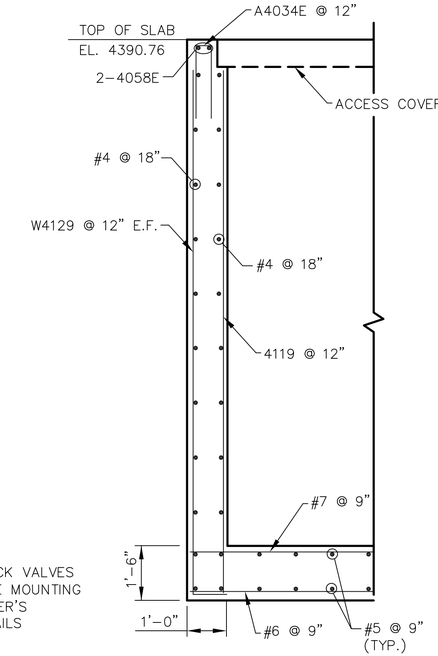

SECTION H

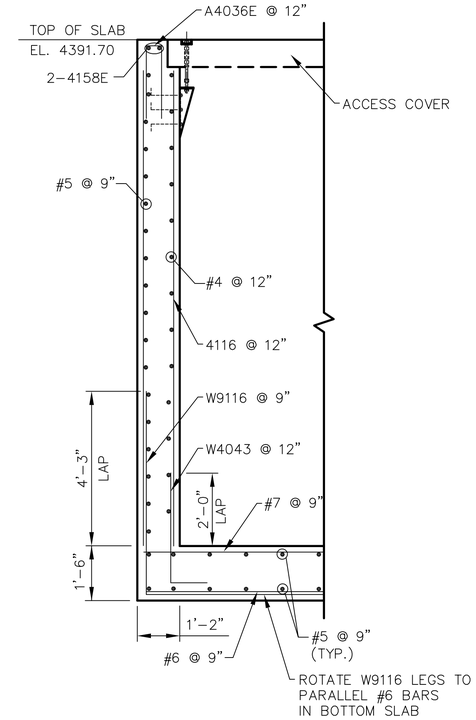

SECTION I

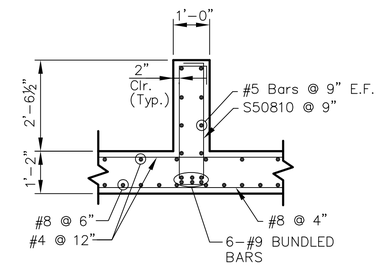

SECTION J

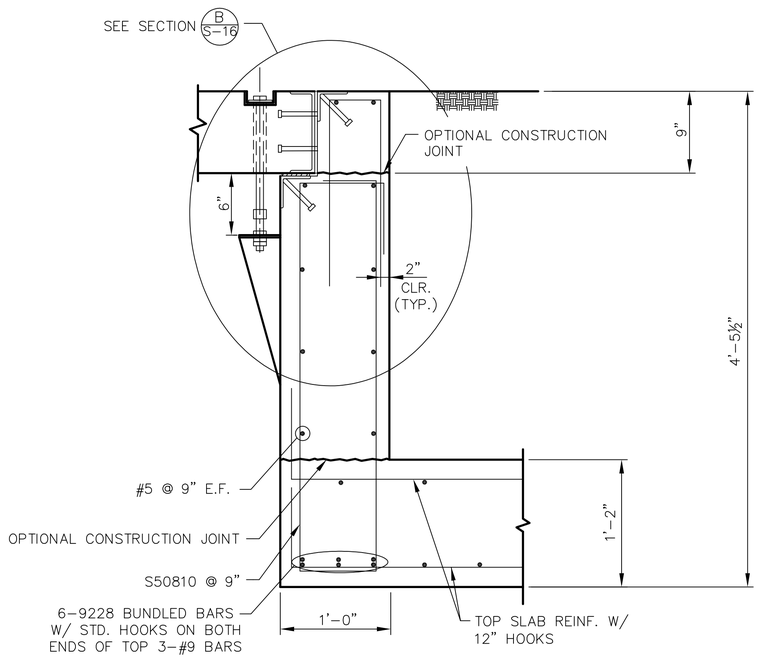

SECTION K

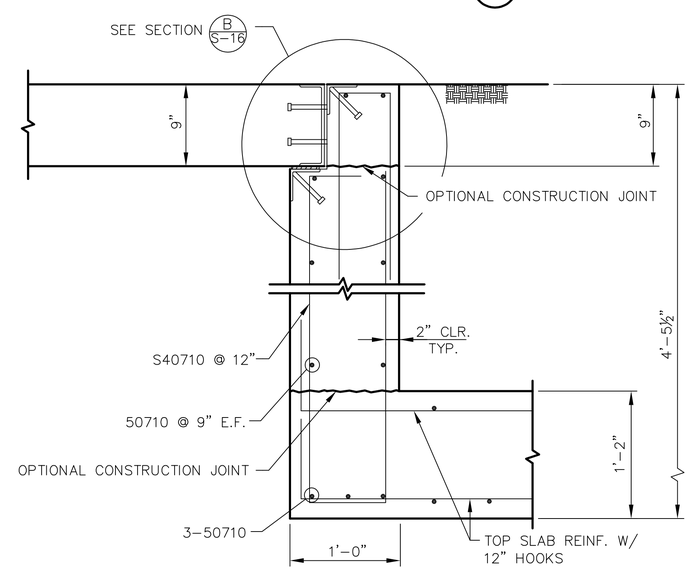

SECTION L

Avoid cutting underground utility lines. It's costly.
Call before you Dig.
1-800-227-2600
UNDERGROUND SERVICE ALERT (USA)

SAFETY ALERT
Call before you Overhead
775-834-7590
NV Energy Construction Line
24hrs. Prior Notice Required
OVERHEAD SERVICE ALERT

REV No.	DATE	DESCRIPTION	APPROVED

DESIGNED BY: MA
DRAWN BY: CLG
CHECKED BY:
APPROVED BY:
SCALE
HORIZ:
VERT:
FIELD BOOK

HDR
HDR Engineering, Inc.
9805 Double R Blvd.
Suite 101
Reno, NV 89521
Phone: 775-337-4700

City of Sparks

NORTH TRUCKEE DRAIN REALIGNMENT PHASE 3

CONFLUENCE STRUCTURE NO. 1

CITY OF SPARKS, NEVADA, PUBLIC WORKS DEPARTMENT

ENGINEER OF NEVADA
GARY A. ANDERSON
Exp: 12/31/2016
CIVIL
No. 5522
PROFESSIONAL
5/11/16

SHEET No
S-4
SHT OF

C:\pwworking\phx\d0351221\S-4.dwg 04/29/16 10:59am POXBORRO

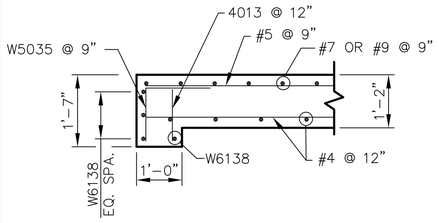

DETAIL M

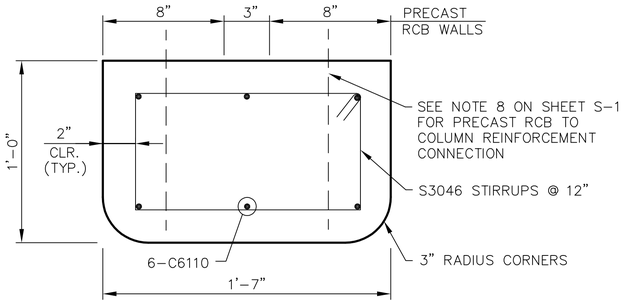

COLUMN SECTION N
W/PRECAST RCB'S

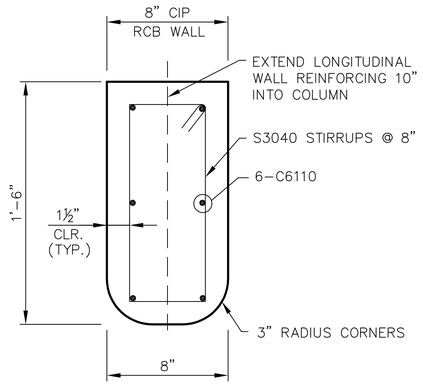

COLUMN SECTION N
W/CAST-IN-PLACE RCB'S

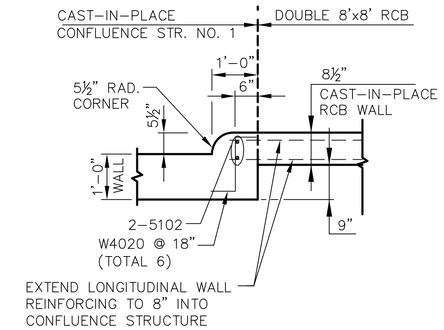

DETAIL O
(FOR CAST-IN-PLACE RCB OPTION)

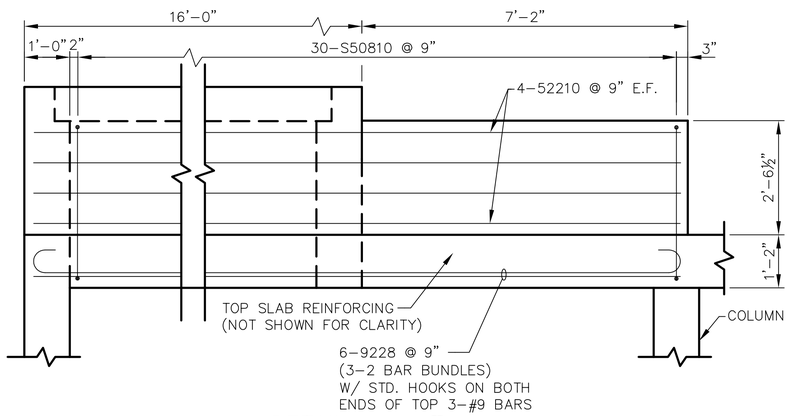

DETAIL R

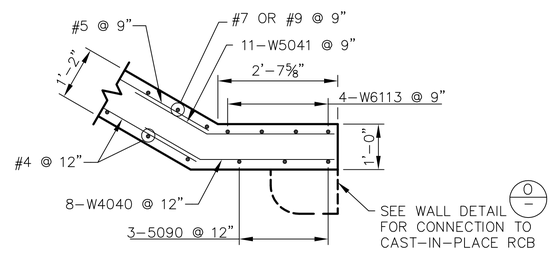

SECTION T

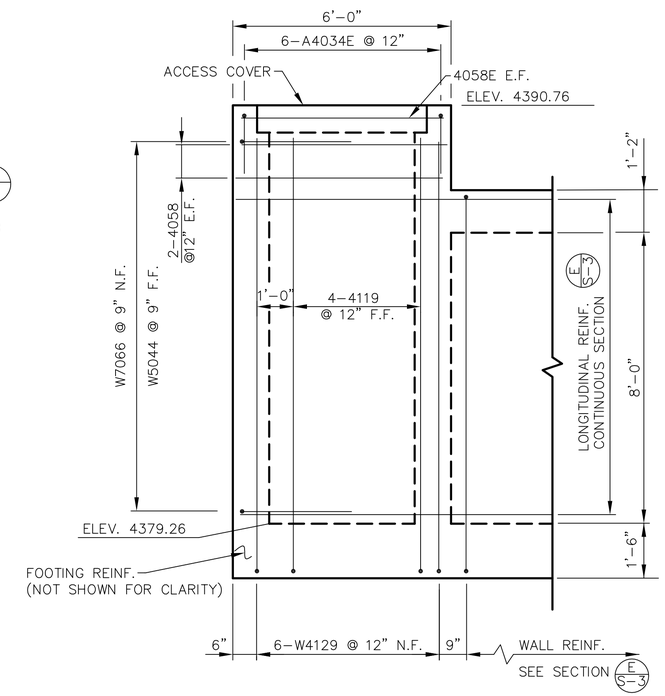

ELEVATION S

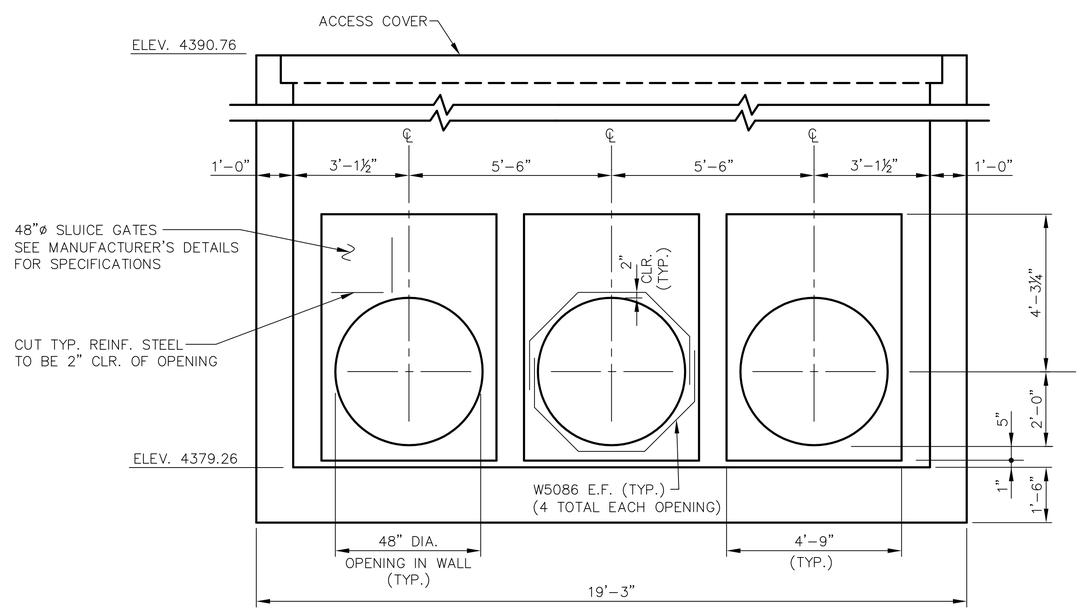

LOCATION OF GATES P

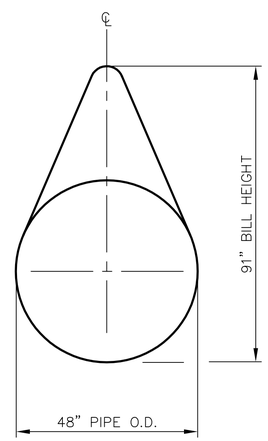

DUCK BILL ELEVATION
ON OUTLET SIDE OF SLUICE GATES

Avoid cutting underground utility lines. It's costly.
Call before you Dig.
1-800-227-2600
UNDERGROUND SERVICE ALERT (USA)

SAFETY ALERT
Call before you Overhead
775-834-7590
NV Energy Construction Line
24hrs. Prior Notice Required
OVERHEAD SERVICE ALERT

REV No.	DATE	DESCRIPTION	APPROVED

DESIGNED BY: MA
DRAWN BY: CLG
CHECKED BY:
APPROVED BY:
SCALE
HORIZ:
VERT:
FIELD BOOK

HDR Engineering, Inc.
9805 Double R Blvd.
Suite 101
Reno, NV 89521
Phone: 775-337-4700

City of Sparks

NORTH TRUCKEE DRAIN REALIGNMENT PHASE 3
CONFLUENCE STRUCTURE NO. 1
CITY OF SPARKS, NEVADA, PUBLIC WORKS DEPARTMENT

STATE OF NEVADA PROFESSIONAL ENGINEER GARY A. ANDERSON Exp. 12/31/2016 CIVIL No. 5522
5/11/16

SHEET No
S-5
SHT OF

C:\pwworking\phx\d0351221\S-5.dwg 04/29/16 10:59am POXBORRO

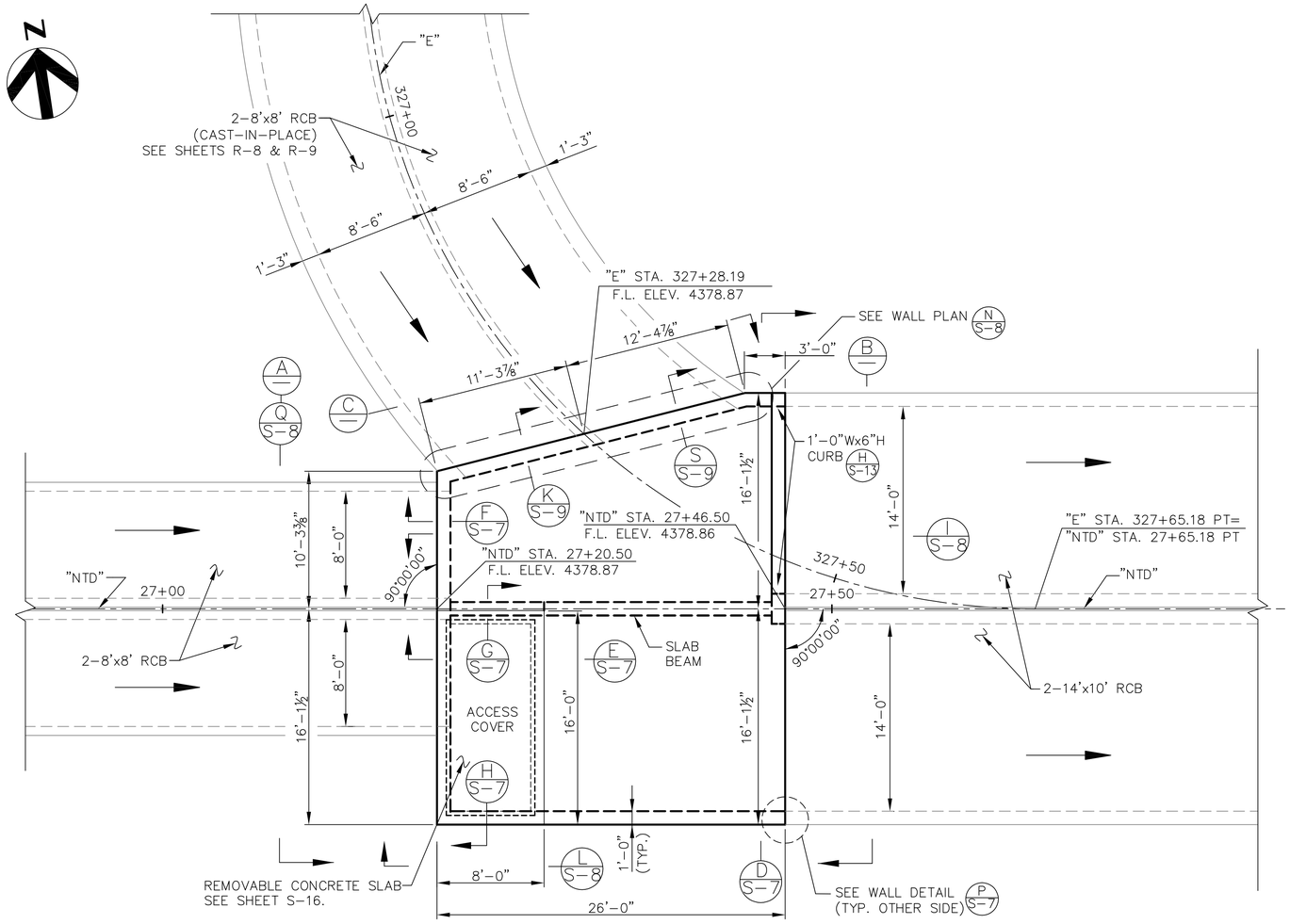

PLAN

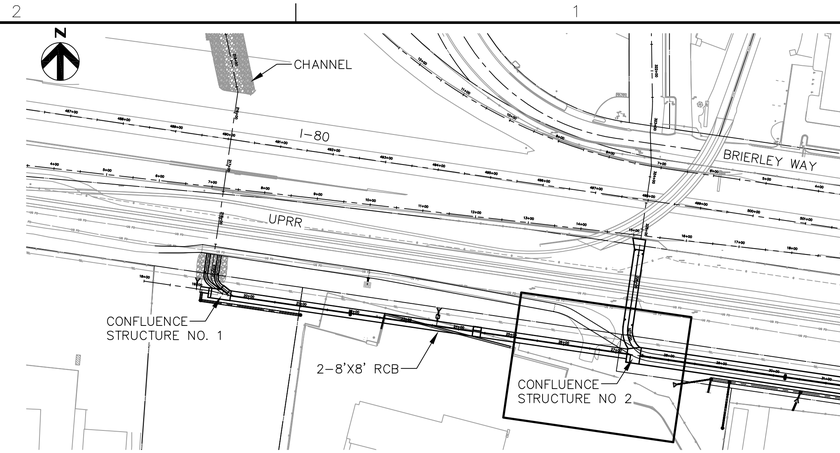

KEY MAP

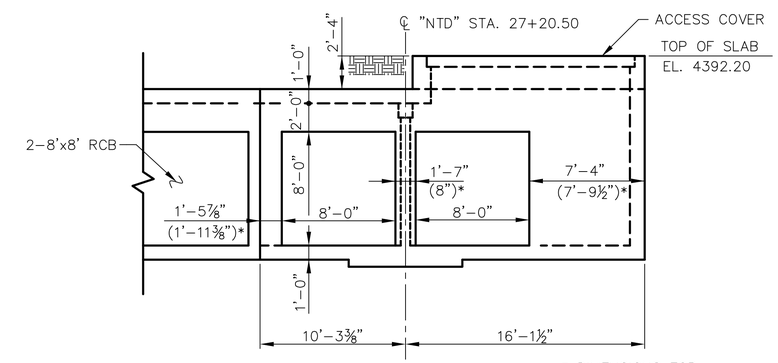

* DIMENSIONS FOR
CAST–IN–PLACE RCB OPTION

ELEVATION A

QUANTITIES		
ITEM	W/ CAST–IN–PLACE RCB'S	W/ PRECAST RCB'S
CONCRETE (CU.YD.)	83.80	83.80
REINFORCING STEEL (LBS.)	15,330	15,313
REINFORCING STEEL (EPOXY COATED) (LBS.)	170	170
STRUCTURAL STEEL (LBS.)	770	770

NOTE:
THE EXTERIOR DIMENSIONS OF THIS STRUCTURE DO NOT CHANGE, AND ARE THE SAME FOR THE BOTH THE CAST–IN–PLACE OR PRECAST RCB OPTIONS.

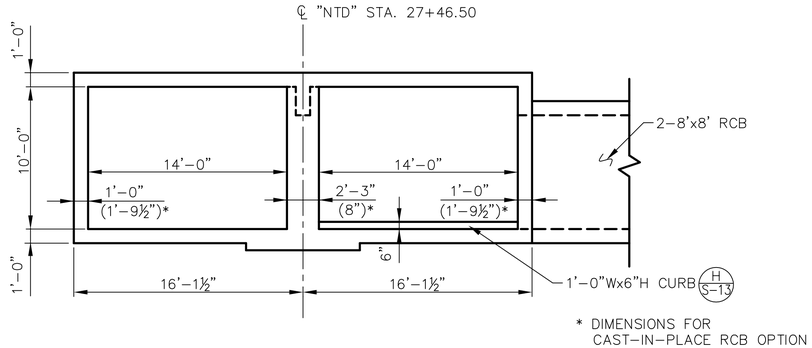

* DIMENSIONS FOR
CAST–IN–PLACE RCB OPTION

ELEVATION B

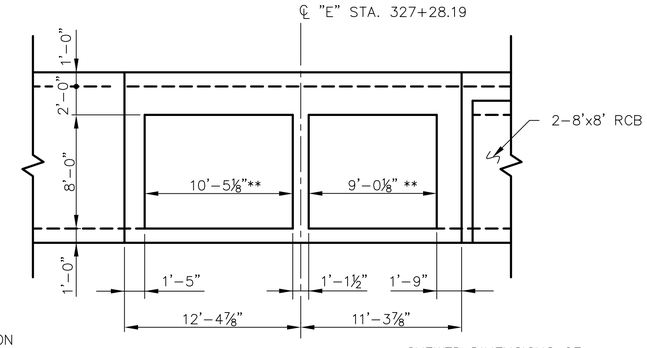

** SKEWED DIMENSIONS OF
2–8'x8' RCB @ WALL FACE

ELEVATION C

Avoid cutting underground utility lines. It's costly.
Call before you Dig.
1-800-227-2600
UNDERGROUND SERVICE ALERT (USA)

SAFETY ALERT
Call before you Overhead
775-834-7590
NV Energy Construction Line
24hrs. Prior Notice Required
OVERHEAD SERVICE ALERT

REV No.	DATE	DESCRIPTION	APPROVED

DESIGNED BY: GAA
DRAWN BY: CLG
CHECKED BY:
APPROVED BY:
SCALE
HORIZ:
VERT:
FIELD BOOK

HDR Engineering, Inc.
9805 Double R Blvd.
Suite 101
Reno, NV 89521
Phone: 775-337-4700

City of Sparks

NORTH TRUCKEE DRAIN REALIGNMENT PHASE 3

CONFLUENCE STRUCTURE NO.2

CITY OF SPARKS, NEVADA, PUBLIC WORKS DEPARTMENT

REGISTERED PROFESSIONAL ENGINEER
STATE OF NEVADA
GARY A. ANDERSON
Exp. 12/31/2016
CIVIL
No. 5522
5/11/16

SHEET No
S-6
SHT OF

C:\pwworking\phx\d0351221\S-6.dwg 04/29/16 11:00am POXBORRO

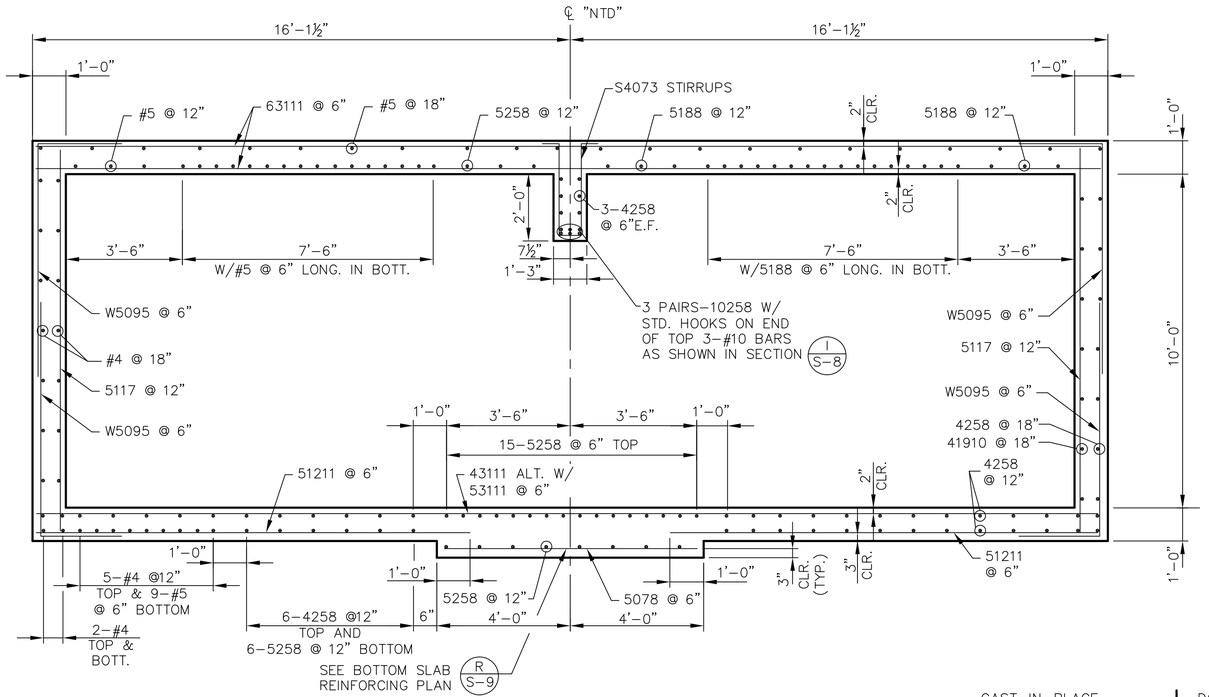

SECTION D

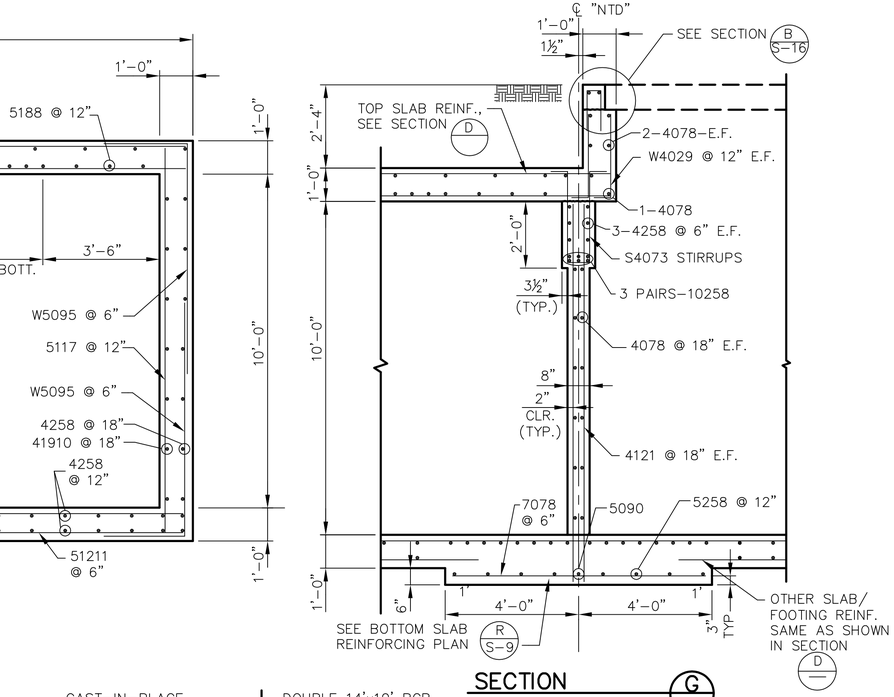

SECTION G

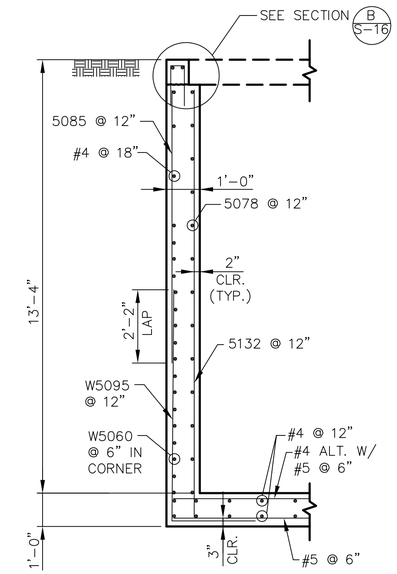

SECTION H

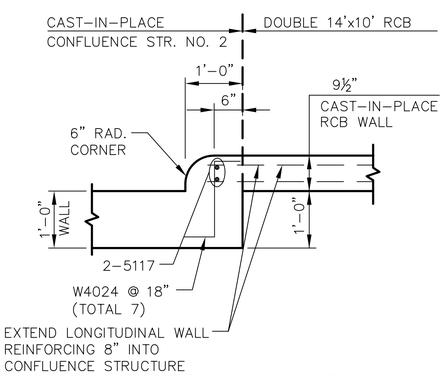

WALL DETAIL P
(FOR CAST-IN-PLACE OPTION)

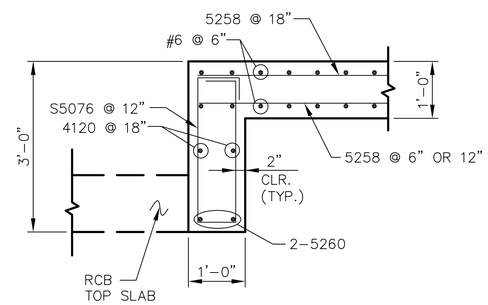

SECTION F

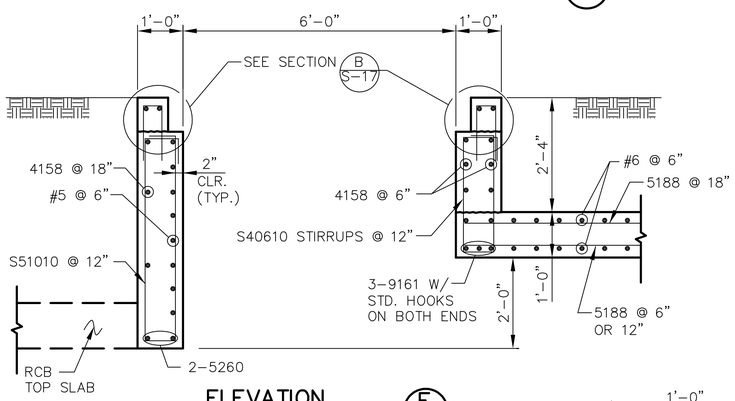

ELEVATION E

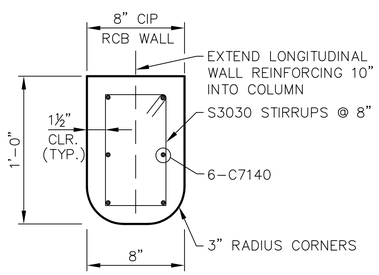

SECTION O
W/ CAST-IN-PLACE RCB'S

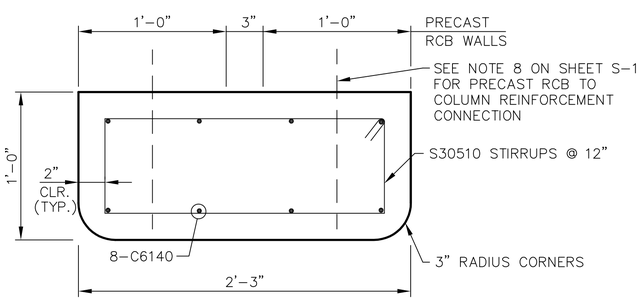

SECTION O
W/ PRECAST RCB'S

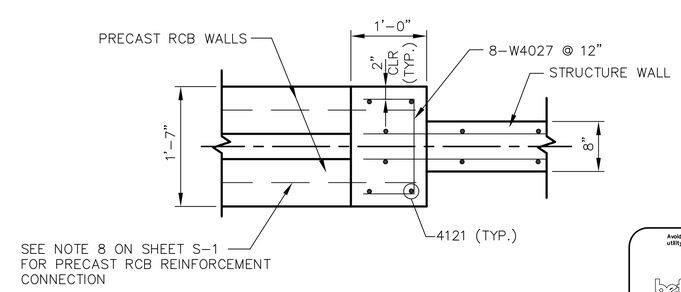

SECTION U

Avoid cutting underground utility lines. It's costly.
Call before you Dig.
1-800-227-2600
UNDERGROUND SERVICE ALERT (USA)

SAFETY ALERT
Call before you Overhead
775-834-7590
NV Energy Construction Line
24hrs. Prior Notice Required
OVERHEAD SERVICE ALERT

REV No.	DATE	DESCRIPTION	APPROVED

DESIGNED BY: GAA
DRAWN BY: CLG
CHECKED BY:
APPROVED BY:
SCALE
HORIZ:
VERT:
FIELD BOOK

HDR Engineering, Inc.
9805 Double R Blvd.
Suite 101
Reno, NV 89521
Phone: 775-337-4700

City of Sparks

NORTH TRUCKEE DRAIN REALIGNMENT PHASE 3

CONFLUENCE STRUCTURE NO.2

CITY OF SPARKS, NEVADA, PUBLIC WORKS DEPARTMENT

STATE OF NEVADA
GARY A. ANDERSON
Exp. 12/31/2016
CIVIL
No. 5522
PROFESSIONAL ENGINEER
6/11/16

SHEET No
S-7
SHT OF

C:\pwworking\phx\d0351221\S-7.dwg 04/29/16 11:00am POXBORRO

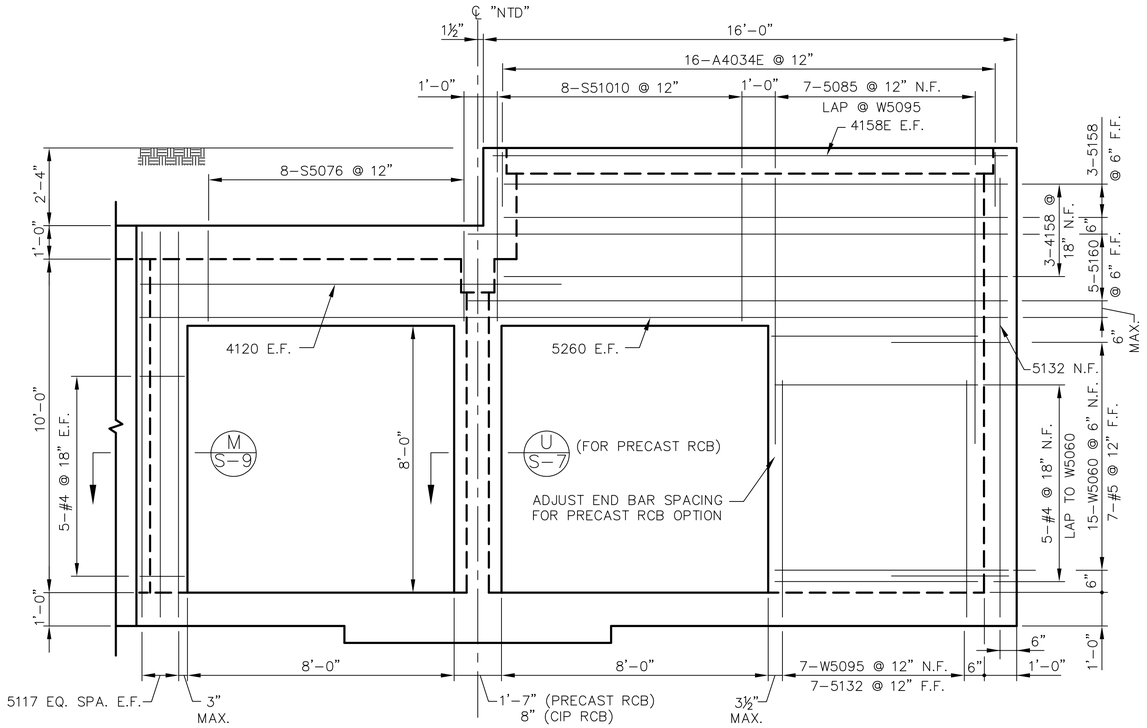

ELEVATION Q
WALL REINFORCING

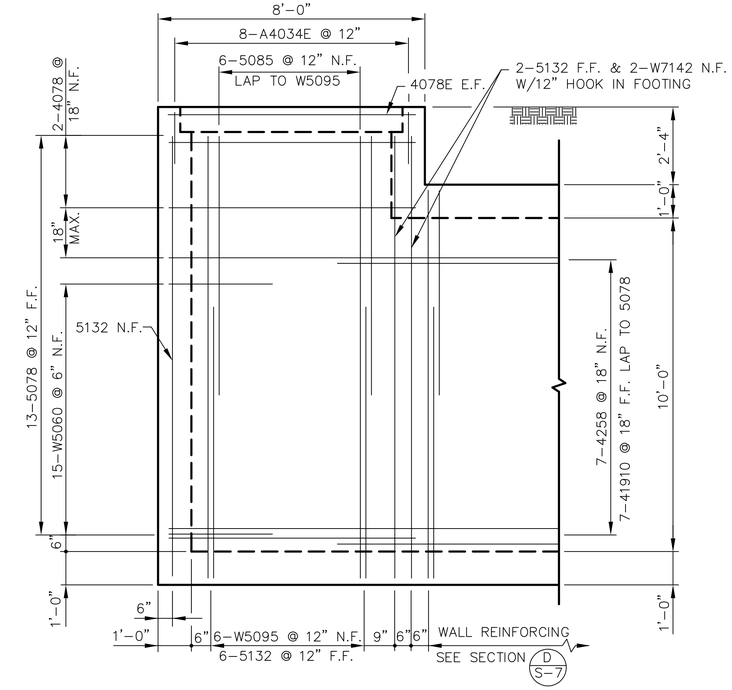

ELEVATION L
WALL REINFORCING

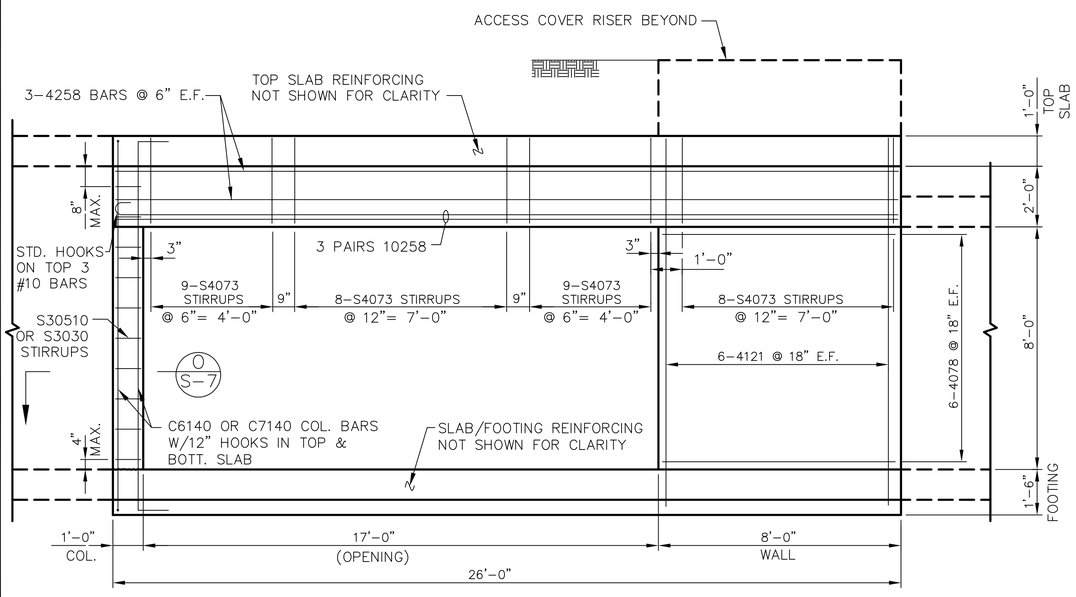

SECTION I
SLAB BEAM NO. 2 & SUPPORT DETAILS

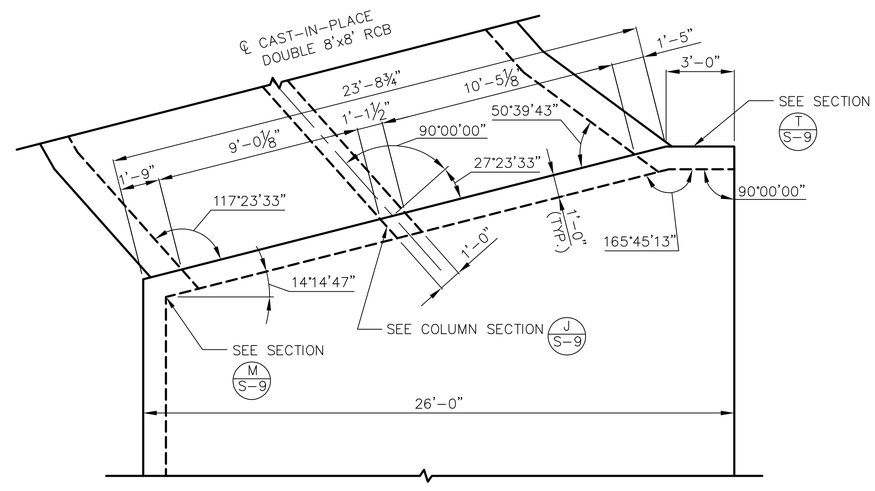

WALL PLAN N

Avoid cutting underground utility lines. It's costly.
Call before you Dig.
1-800-227-2600
UNDERGROUND SERVICE ALERT (USA)

SAFETY ALERT
Call before you Overhead
775-834-7590
NV Energy Construction Line
24hrs. Prior Notice Required
OVERHEAD SERVICE ALERT

REV No.	DATE	DESCRIPTION	APPROVED

DESIGNED BY: GAA
DRAWN BY:
CHECKED BY: CLG
APPROVED BY:
SCALE
HORIZ:
VERT:
FIELD BOOK

HDR Engineering, Inc.
9805 Double R Blvd.
Suite 101
Reno, NV 89521
Phone: 775-337-4700

City of Sparks

NORTH TRUCKEE DRAIN REALIGNMENT PHASE 3

CONFLUENCE STRUCTURE NO.2

CITY OF SPARKS, NEVADA, PUBLIC WORKS DEPARTMENT

STATE OF NEVADA
GARY A. ANDERSON
Exp. 12/31/2016
CIVIL
No. 5522
PROFESSIONAL ENGINEER
5/11/16

SHEET No
S-8
SHT OF

C:\pwworking\phx\d0351221\S-8.dwg 04/29/16 11:00am POXBORRO

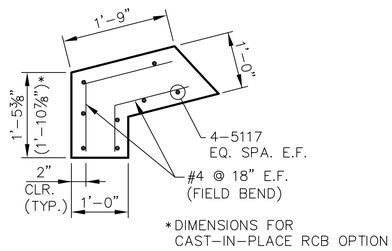

SECTION M

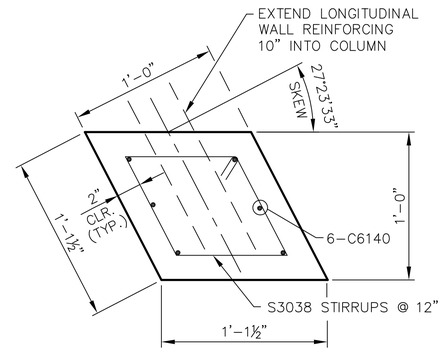

SECTION J

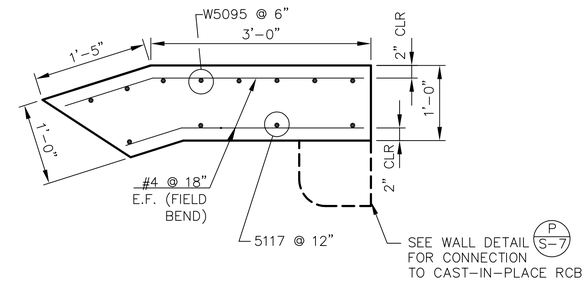

SECTION T

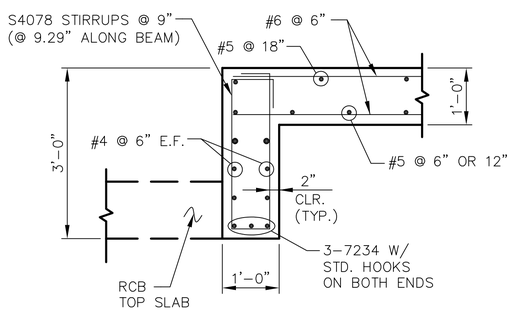

SECTION K

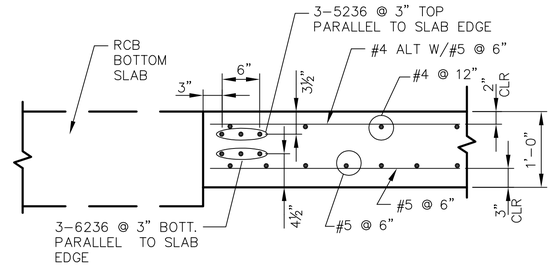

SECTION S

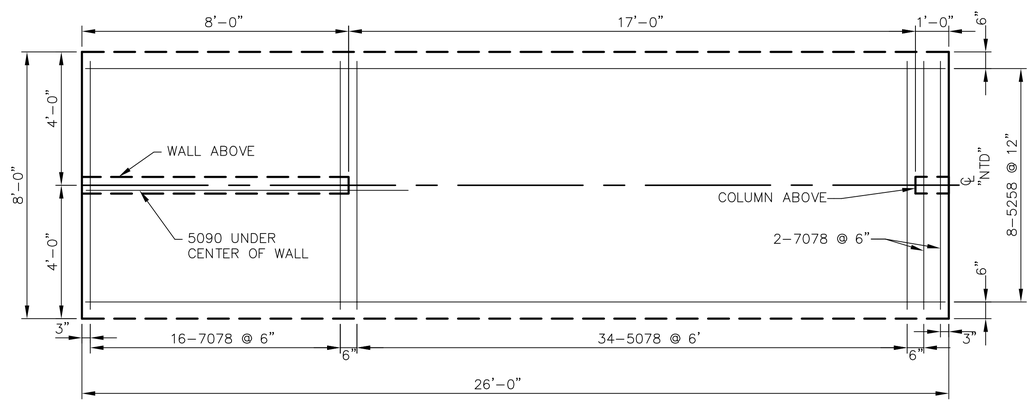

BOTTOM SLAB REINFORCING PLAN R

26'-0" X 8'-0" X 1'-6" THICKENED SLAB

Avoid cutting underground utility lines. It's costly.
Call before you Dig.
1-800-227-2600
UNDERGROUND SERVICE ALERT (USA)

SAFETY ALERT
Call before you Overhead
775-834-7590
NV Energy Construction Line
24hrs. Prior Notice Required
OVERHEAD SERVICE ALERT

REV No.	DATE	DESCRIPTION	APPROVED

DESIGNED BY: GAA
DRAWN BY: CLG
CHECKED BY:
APPROVED BY:
SCALE
HORIZ:
VERT:
FIELD BOOK

HDR Engineering, Inc.
9805 Double R Blvd.
Suite 101
Reno, NV 89521
Phone: 775-337-4700

City of Sparks

NORTH TRUCKEE DRAIN REALIGNMENT PHASE 3

CONFLUENCE STRUCTURE NO.2

CITY OF SPARKS, NEVADA, PUBLIC WORKS DEPARTMENT

REGISTERED PROFESSIONAL ENGINEER STATE OF NEVADA GARY A. ANDERSON Exp. 12/31/2016 CIVIL No. 5522
5/11/16

SHEET No
S-9
SHT OF

C:\pwworking\phx\d0351221\S-9.dwg 04/29/16 11:00am POXBORRO

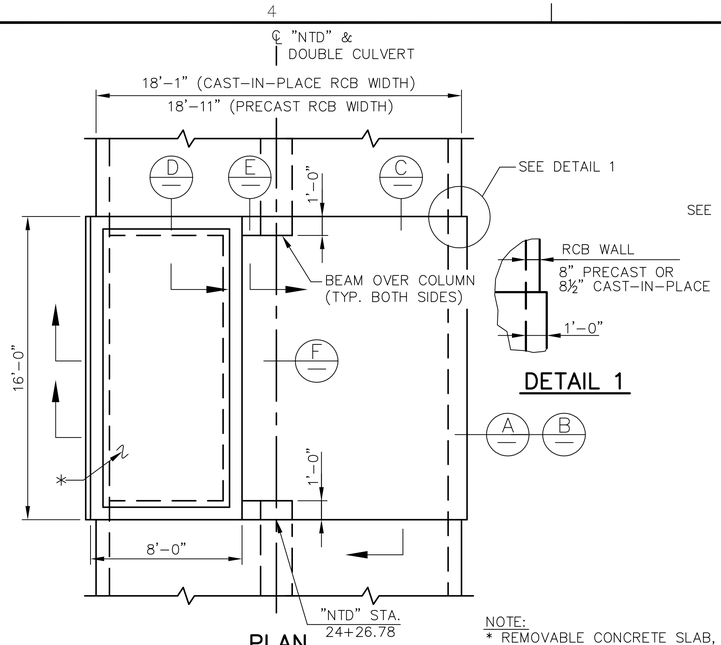

PLAN
ACCESS VAULT FOR 2-8'x8' RCB

DETAIL 1

NOTE:
* REMOVABLE CONCRETE SLAB, SEE SHEET S-16.

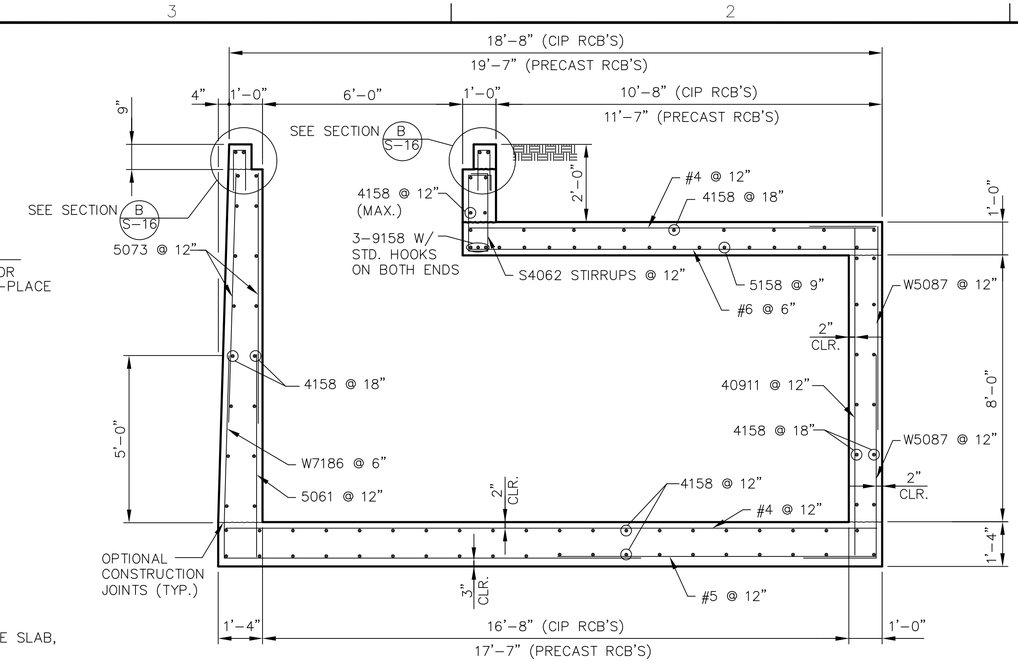

SECTION B
REINFORCING

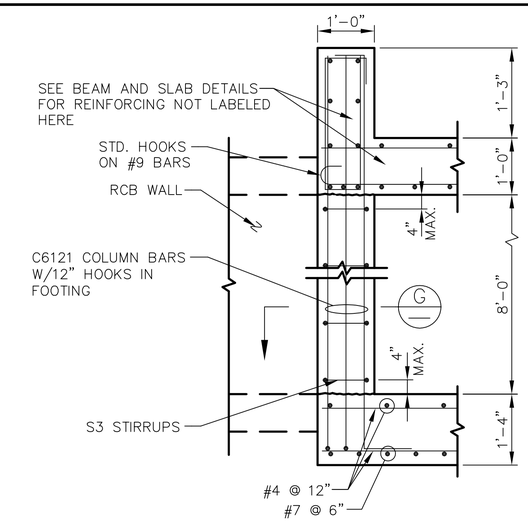

ELEVATION E
COLUMN/FOOTING REINFORCING

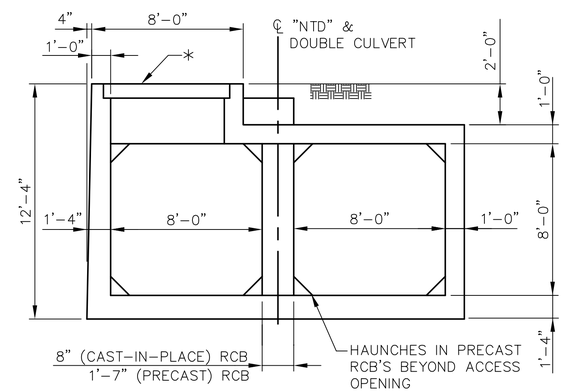

SECTION/ELEVATION A

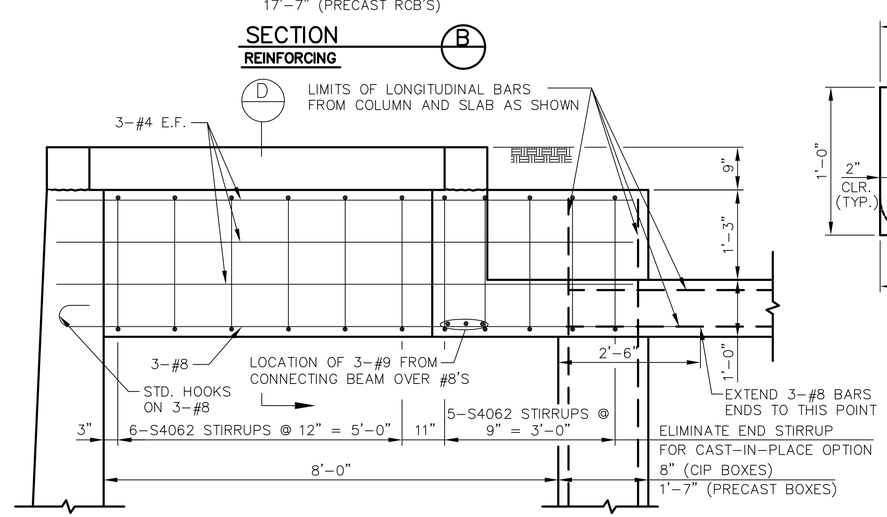

SECTION/ELEVATION F
END BEAM REINFORCING DETAILS

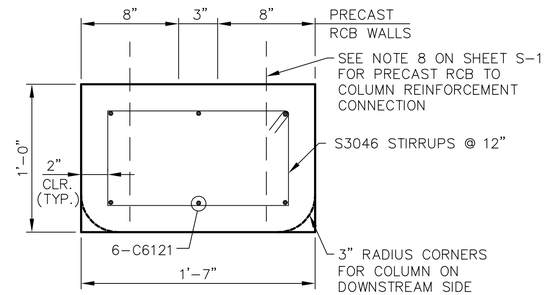

COLUMN SECTIONS G
W/ PRECAST RCB'S

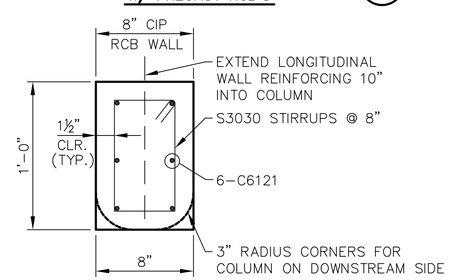

COLUMN SECTIONS G
W/ CAST-IN-PLACE RCB'S

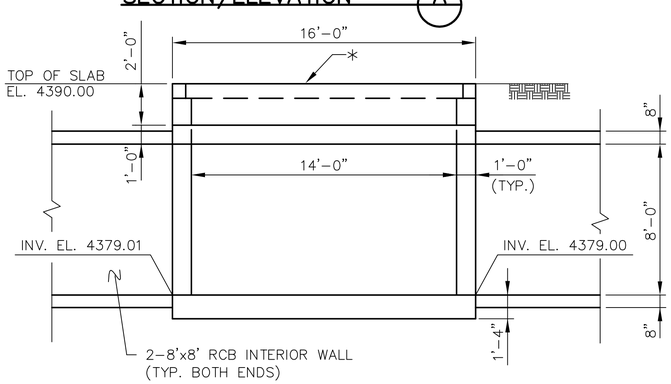

SECTION/ELEVATION C

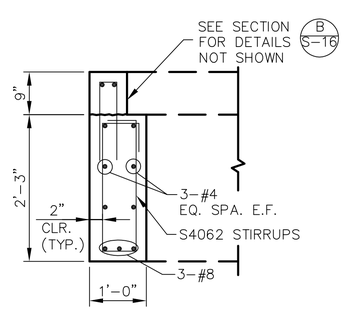

SECTION D

QUANTITIES		
ITEM	W/ CAST-IN-PLACE RCB'S	W/ PRECAST RCB'S
CONCRETE (CU.YD.)	36.90	38.80
REINFORCING STEEL (LBS.)	5217	5314
REINFORCING STEEL (EPOXY COATED) (LBS.)	170	170
STRUCTURAL STEEL (LBS.)	770	770

Avoid cutting underground utility lines. It's costly.
Call before you Dig.
1-800-227-2600
UNDERGROUND SERVICE ALERT (USA)

SAFETY ALERT
Call before you Overhead
775-834-7590
NV Energy Construction Line
24hrs. Prior Notice Required
OVERHEAD SERVICE ALERT

REV No.	DATE	DESCRIPTION	APPROVED

DESIGNED BY: GAA
DRAWN BY: CLG
CHECKED BY:
APPROVED BY:
SCALE
HORIZ:
VERT:
FIELD BOOK

HDR Engineering, Inc.
9805 Double R Blvd.
Suite 101
Reno, NV 89521
Phone: 775-337-4700

City of Sparks

NORTH TRUCKEE DRAIN REALIGNMENT PHASE 3

ACCESS VAULT DETAILS
FOR DOUBLE 8'x8' RCB

CITY OF SPARKS, NEVADA, PUBLIC WORKS DEPARTMENT

STATE OF NEVADA PROFESSIONAL ENGINEER GARY A. ANDERSON Exp. 12/31/2016 CIVIL No. 15522 5/11/16

SHEET No
S-10
SHT OF

C:\pwworking\phx\d0351221\S-10.dwg 04/29/16 11:00am POXBORRO

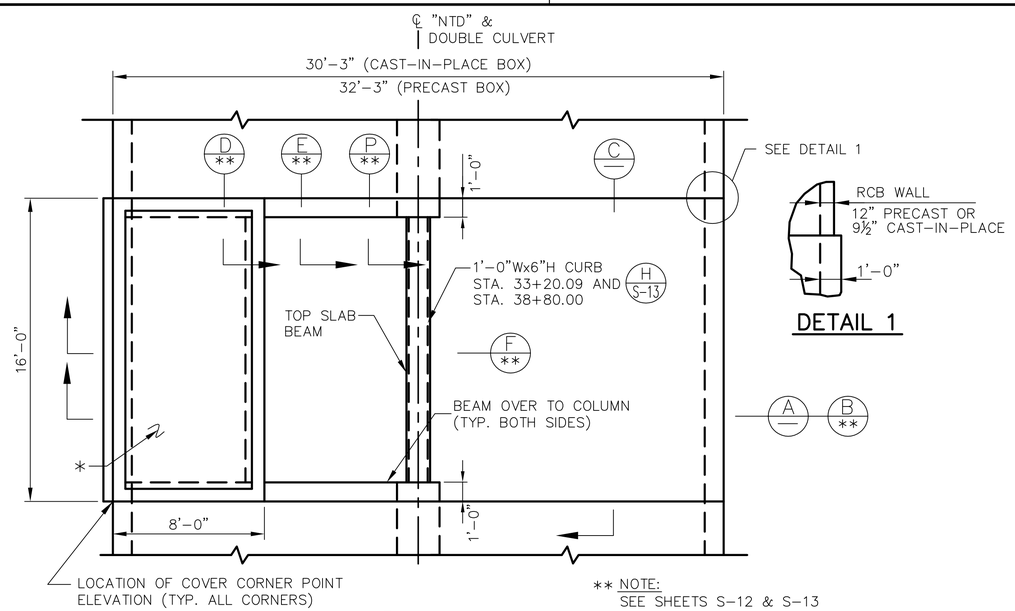

** NOTE:
SEE SHEETS S-12 & S-13

PLAN

ACCESS VAULT FOR 2-14'x10' RCB

DETAIL 1

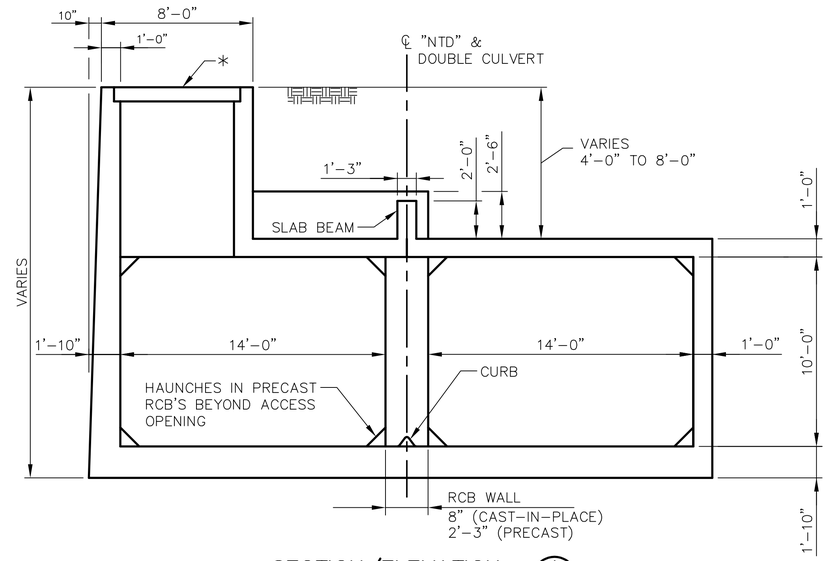

SECTION/ELEVATION (A)

**FOR VAULTS W/ 4'-0"
TO 8'-0" COVER**

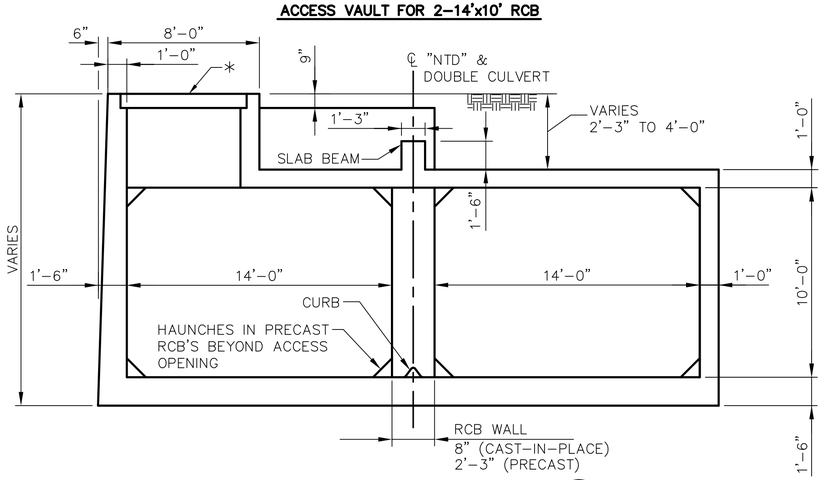

SECTION/ELEVATION (A)

**FOR VAULTS W/ 2'-3"
TO 4'-0" COVER**

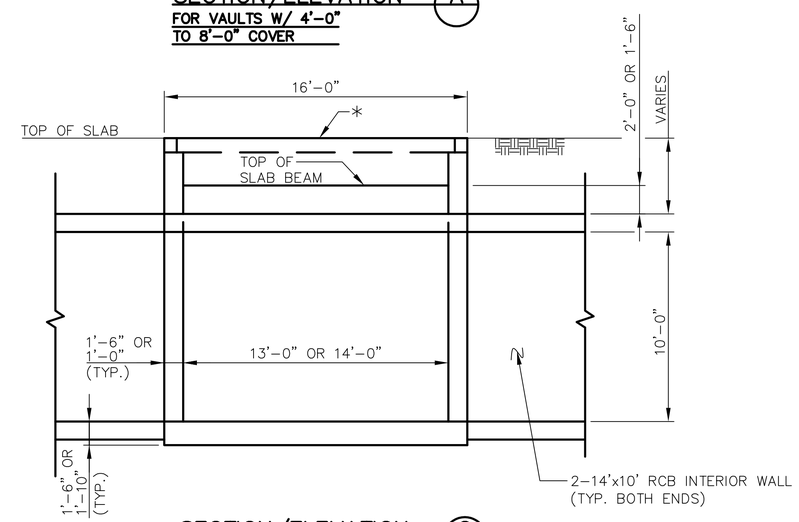

SECTION/ELEVATION (C)

NOTES:

1. DIMENSIONS VARY BASED ON TYPE OF RCB AND DEPTH OF COVER. SEE DETAILS ON SHEET S-12 AND S-13.
2. * REMOVABLE CONCRETE SLAB, SHEET S-16.

QUANTITIES TYPICAL FOR EACH STRUCTURE	
REINFORCING STEEL (EPOXY COATED) (LBS)	170
STRUCTURAL STEEL (LBS.)	770

QUANTITIES				
STRUCTURE LOCATION (CENTER OF VAULT)	CONCRETE (CU.YD)		REINFORCING STEEL (LBS)	
	W/ CAST-IN-PLACE RCB'S	W/ PRECAST RCB'S	W/ CAST-IN-PLACE RCB'S	W/ PRECAST RCB'S
"NTD" STA. 33+20.09	63.50	67.00	10,201	10,497
"NTD" STA. 38+80.00	76.30	79.90	12,045	12,389
"NTD" STA. 44+17.00	65.70	69.30	10,387	10,708
"NTD" STA. 49+24.00	76.30	79.90	12,045	12,389

DOUBLE 14'x10' RCB ACCESS VAULT COVER ELEVATIONS						
STRUCTURE LOCATION (CENTER OF VAULT)	INV. ELEVATION		COVER CORNER POINT ELEVATIONS			
	IN	OUT	NW	NE	SE	SW
"NTD" STA. 33+20.09	4378.59	4378.58	4392.30	4392.30	4392.30	4392.30
"NTD" STA. 38+80.00	4378.31	4378.31	4396.00	4396.00	4396.00	4396.00
"NTD" STA. 44+17.00	4378.05	4378.04	4392.70	4392.70	4392.70	4392.70
"NTD" STA. 49+24.00	4377.81	4377.80	4395.50	4395.50	4395.50	4395.50

Avoid cutting underground utility lines. It's costly.
Call before you Dig.
1-800-227-2600
UNDERGROUND SERVICE ALERT (USA)

SAFETY ALERT
Call before you Overhead
775-834-7590
NV Energy Construction Line
24hrs. Prior Notice Required
OVERHEAD SERVICE ALERT

REV No.	DATE	DESCRIPTION	APPROVED

DESIGNED BY: GAA
DRAWN BY: CLG
CHECKED BY:
APPROVED BY:
SCALE
HORIZ:
VERT:
FIELD BOOK

HDR Engineering, Inc.
9805 Double R Blvd.
Suite 101
Reno, NV 89521
Phone: 775-337-4700

City of Sparks

NORTH TRUCKEE DRAIN REALIGNMENT PHASE 3

ACCESS VAULT DETAILS
FOR DOUBLE 14'x10' RCB

CITY OF SPARKS, NEVADA, PUBLIC WORKS DEPARTMENT

STATE OF NEVADA
PROFESSIONAL ENGINEER
CARY A. ANDERSON
Exp. 12/31/2016
CIVIL
No. 5522
5/11/16

SHEET No
S-11
SHT OF

C:\pwworking\phx\d0351221\S-11.dwg 04/29/16 11:00am POXBORRO

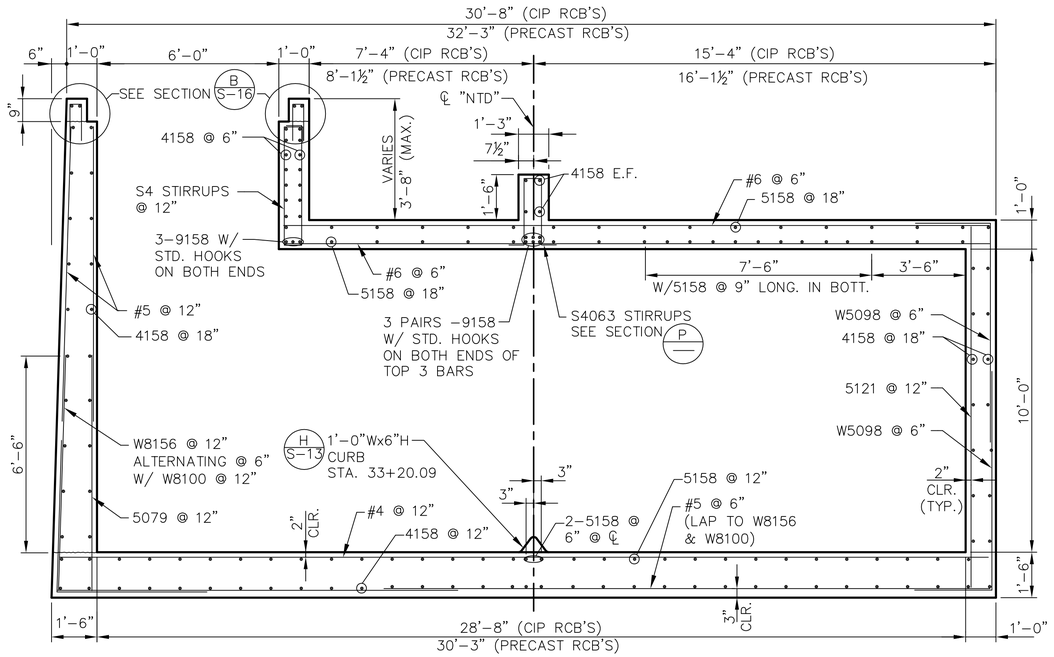

SECTION B

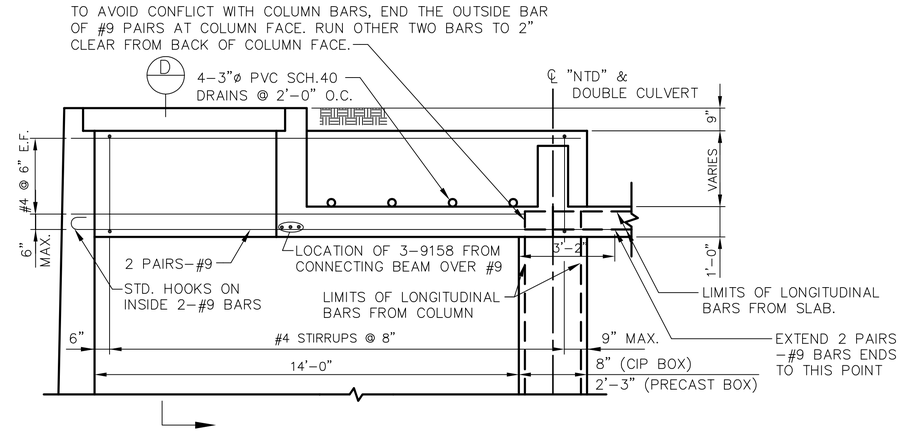

SECTION F
END BEAM REINFORCING DETAIL

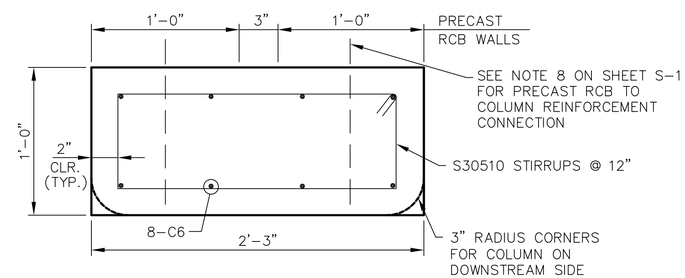

COLUMN SECTIONS G
W/ PRECAST RCB'S

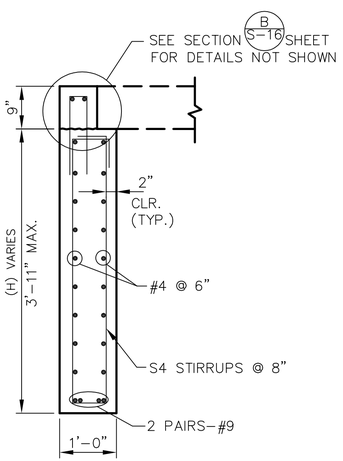

SECTION D
FOR H < 5'-0"

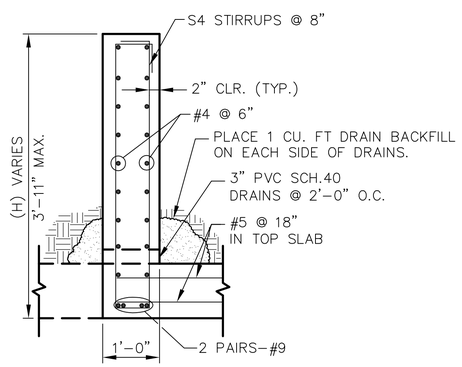

SECTION E
W/ SECTION D FOR H < 5'-0"

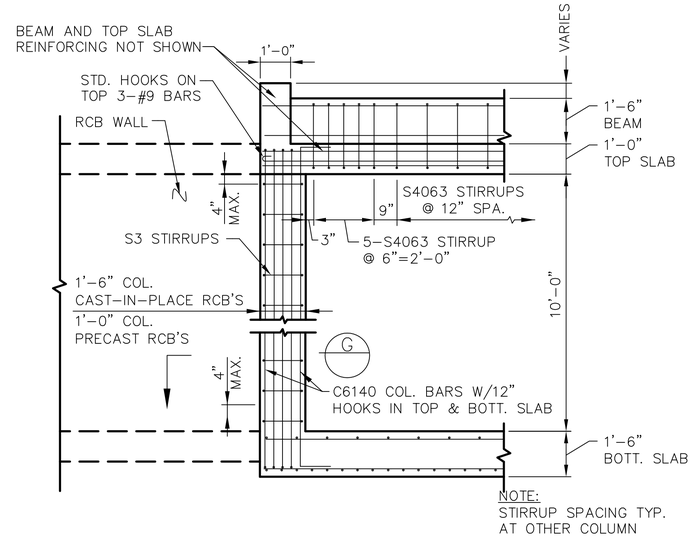

SECTION P
SLAB BEAM SUPPORT DETAILS

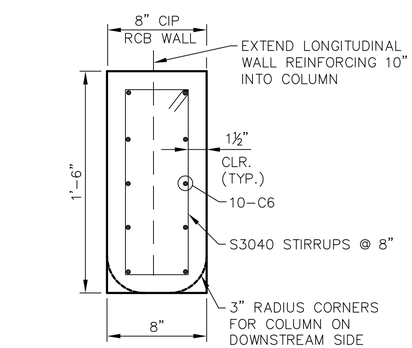

COLUMN SECTIONS G
W/ CAST-IN-PLACE RCB'S

FOR VAULTS AT "NTD" STA. 33+20.09 AND STA. 44+17.00

Avoid cutting underground utility lines. It's costly.
Call before you Dig.
1-800-227-2600
UNDERGROUND SERVICE ALERT (USA)

SAFETY ALERT
Call before you Overhead
775-834-7590
NV Energy Construction Line
24hrs. Prior Notice Required
OVERHEAD SERVICE ALERT

REV No.	DATE	DESCRIPTION	APPROVED

DESIGNED BY: GAA
DRAWN BY: CLG
CHECKED BY:
APPROVED BY:
SCALE
HORIZ:
VERT:
FIELD BOOK

HDR Engineering, Inc.
9805 Double R Blvd.
Suite 101
Reno, NV 89521
Phone: 775-337-4700

City of Sparks

NORTH TRUCKEE DRAIN REALIGNMENT PHASE 3

ACCESS VAULT DETAILS
FOR DOUBLE 14'X10' RCB

CITY OF SPARKS, NEVADA, PUBLIC WORKS DEPARTMENT

ENGINEER OF NEVADA
GARY A. ANDERSON
Exp: 12/31/2016
CIVIL
No. 5522
PROFESSIONAL
5/11/16

SHEET No
S-12
SHT OF

C:\pwworking\phx\d0351221\S-12.dwg 04/29/16 11:00am POXBORRO

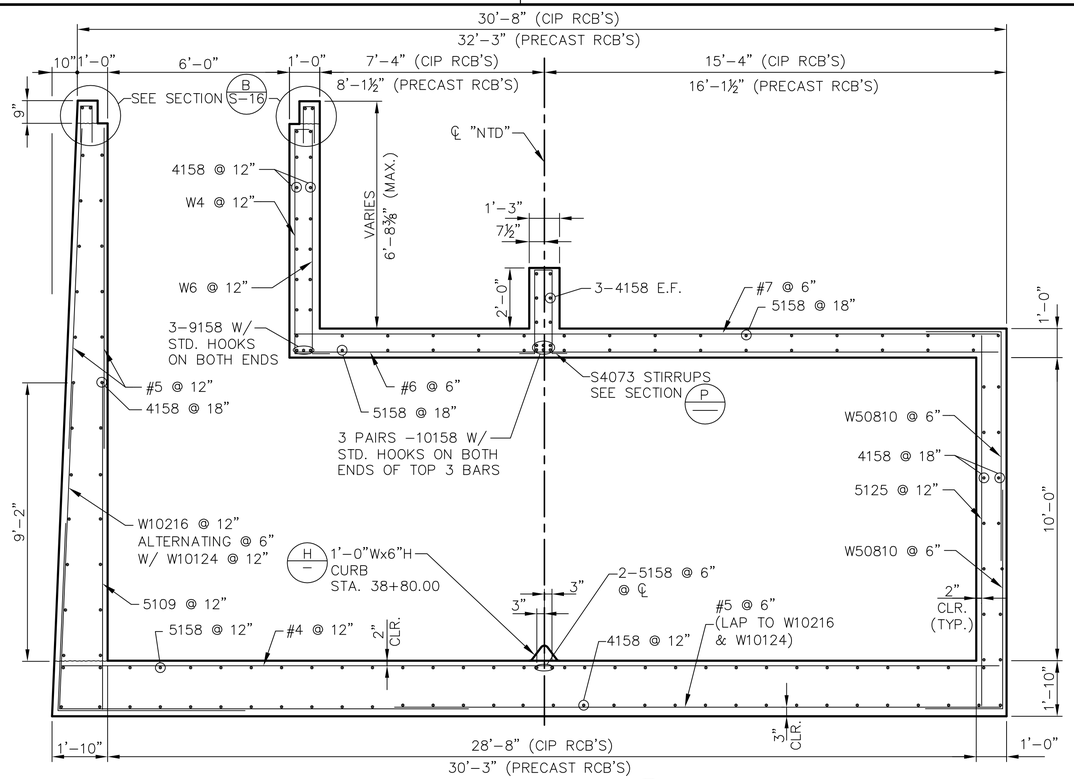

SECTION B

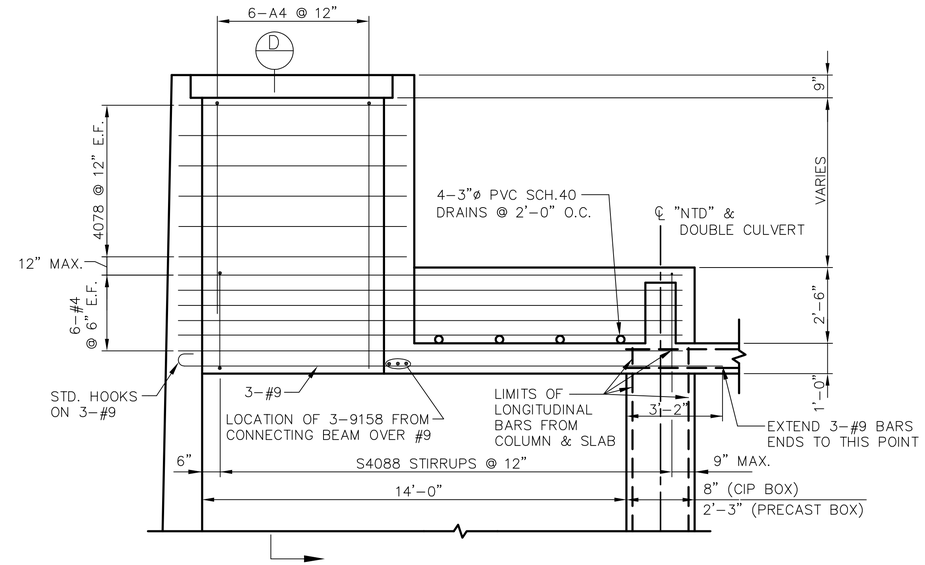

SECTION F
END BEAM REINFORCING DETAIL

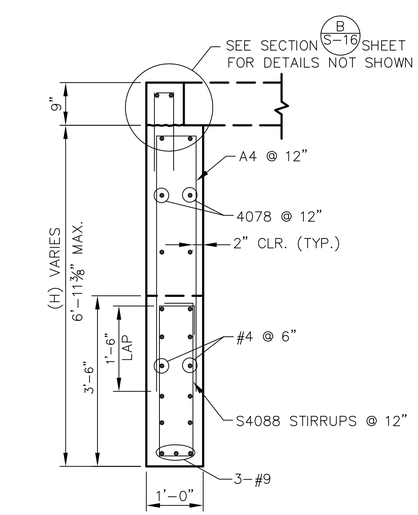

SECTION D
FOR H ≥ 5'-0"

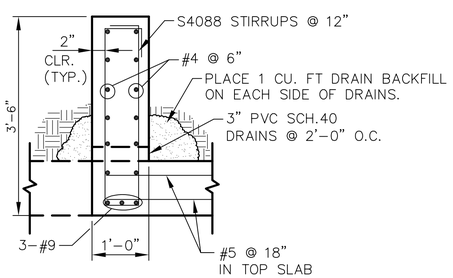

SECTION E
W/ SECTION D FOR H > 5'-0"

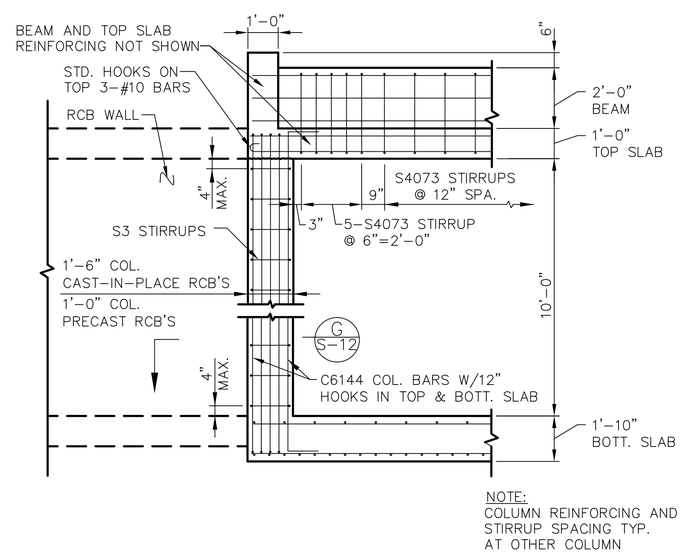

NOTE:
COLUMN REINFORCING AND STIRRUP SPACING TYP. AT OTHER COLUMN

SECTION P
SLAB BEAM & SUPPORT DETAILS

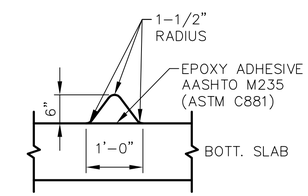

CURB DETAIL H

FOR VAULTS AT "NTD" STA. 38+80.00 AND STA. 49+24.00

Avoid cutting underground utility lines. It's costly.
Call before you Dig.
1-800-227-2600
UNDERGROUND SERVICE ALERT (USA)

SAFETY ALERT
Call before you Overhead
775-834-7590
NV Energy Construction Line
24hrs. Prior Notice Required
OVERHEAD SERVICE ALERT

REV No.	DATE	DESCRIPTION	APPROVED

DESIGNED BY: GAA
DRAWN BY: CLG
CHECKED BY:
APPROVED BY:
SCALE
HORIZ:
VERT:
FIELD BOOK

HDR Engineering, Inc.
9805 Double R Blvd.
Suite 101
Reno, NV 89521
Phone: 775-337-4700

City of Sparks

NORTH TRUCKEE DRAIN REALIGNMENT PHASE 3

ACCESS VAULT DETAILS
FOR DOUBLE 14'x10' RCB

CITY OF SPARKS, NEVADA, PUBLIC WORKS DEPARTMENT

STATE OF NEVADA PROFESSIONAL ENGINEER GARY A. ANDERSON Exp: 12/31/2016 CIVIL No. 5522
5/11/16

SHEET No
S-13
SHT OF

C:\pwworking\phx\d0351221\S-13.dwg 04/29/16 11:00am POXBORRO

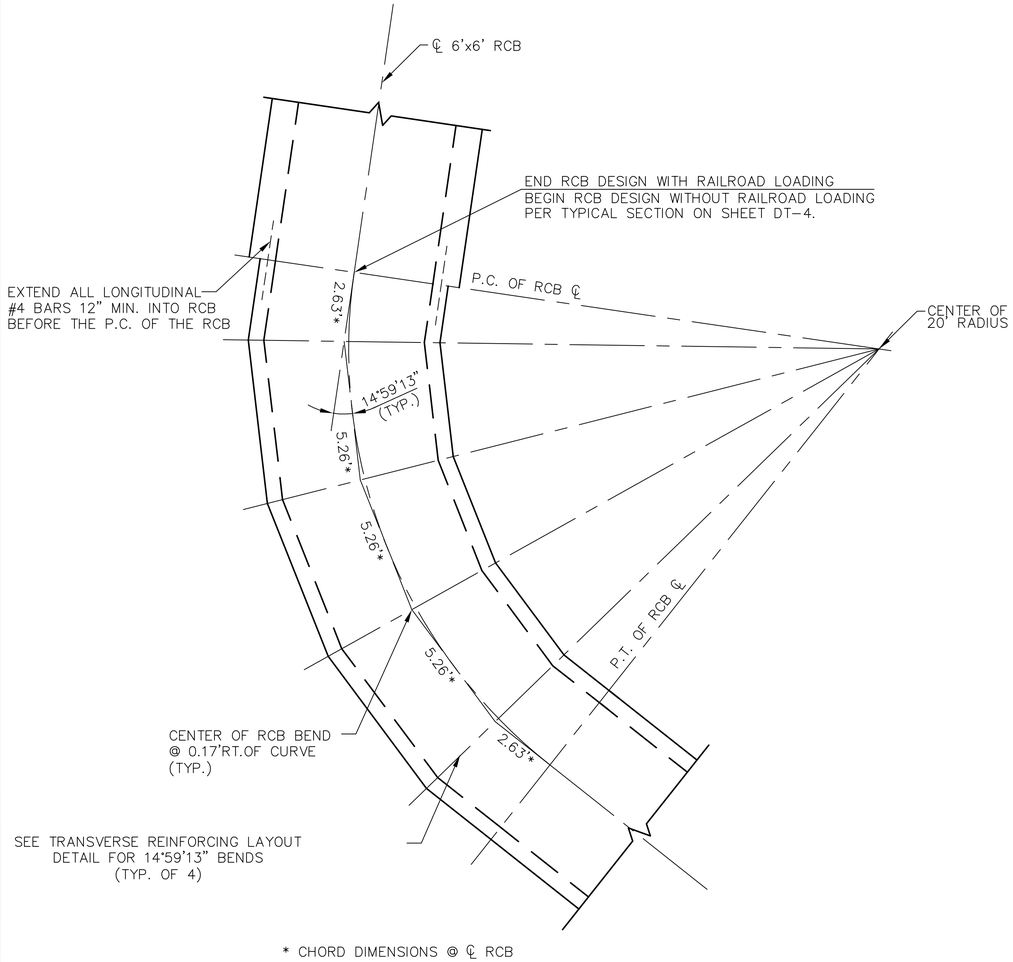

* CHORD DIMENSIONS @ ℄ RCB

PLAN

SINGLE 6'x6' RCB BENDS AT 20' RADIUS
SEE SHEET S-2 FOR RCB'S P.C. AND P.T. LOCATIONS

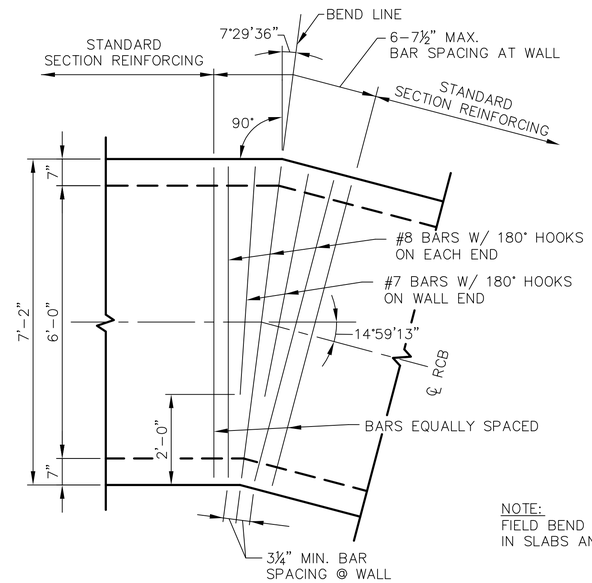

NOTE:
FIELD BEND ALL LONGITUDINAL #4 BARS
IN SLABS AND WALLS AT BEND LINE.

TRANSVERSE REINFORCING LAYOUT

SINGLE 6'x6' RCB @ 14°59'13" BEND (CAST-IN-PLACE)
(TYPICAL FOR TOP AND BOTTOM SLABS)

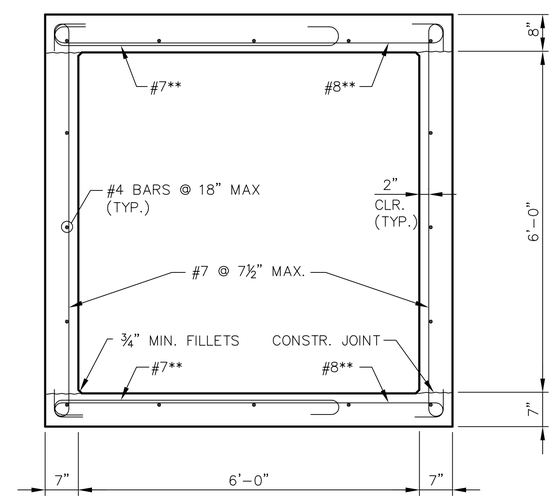

** #7 ALTERNATING W/#8 EQUALLY SPACED
(TYP. TOP & BOTT. SLABS)

SECTION AT BENDS

SINGLE 6'x6' RCB

Avoid cutting underground utility lines. It's costly.
Call before you Dig.
1-800-227-2600
UNDERGROUND SERVICE ALERT (USA)

SAFETY ALERT
Call before you Overhead
775-834-7590
NV Energy Construction Line
24hrs. Prior Notice Required
OVERHEAD SERVICE ALERT

REV No.	DATE	DESCRIPTION	APPROVED

DESIGNED BY: GAA
DRAWN BY: CLG
CHECKED BY:
APPROVED BY:
SCALE
HORIZ:
VERT:
FIELD BOOK

HDR
HDR Engineering, Inc.
9805 Double R Blvd.
Suite 101
Reno, NV 89521
Phone: 775-337-4700

City of Sparks

NORTH TRUCKEE DRAIN REALIGNMENT PHASE 3

BEND DETAILS
FOR SINGLE 6'x6' RCB (CAST-IN-PLACE)

CITY OF SPARKS, NEVADA, PUBLIC WORKS DEPARTMENT

STATE OF NEVADA
PROFESSIONAL ENGINEER
GARY A. ANDERSON
Exp. 12/31/2016
CIVIL
No. 5522
5/11/16

SHEET No
S-14
SHT OF

C:\pwworking\phx\d0351221\S-14.dwg 04/29/16 11:00am POXBORRO

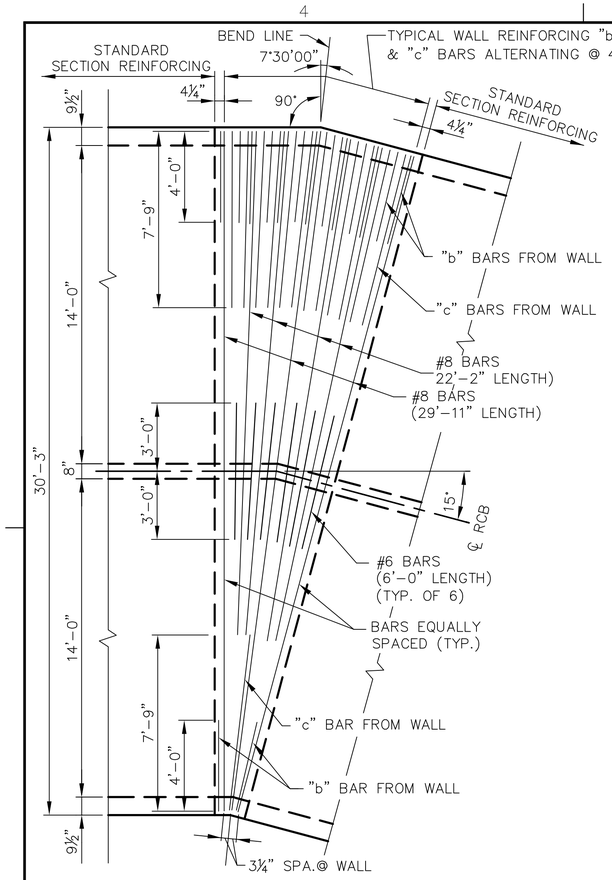

TRANSVERSE REINFORCING LAYOUT

DOUBLE 14'x10' RCB @ 15° BENDS (CAST-IN-PLACE)

TOP OF TOP SLAB & BOTTOM OF BOTTOM SLAB

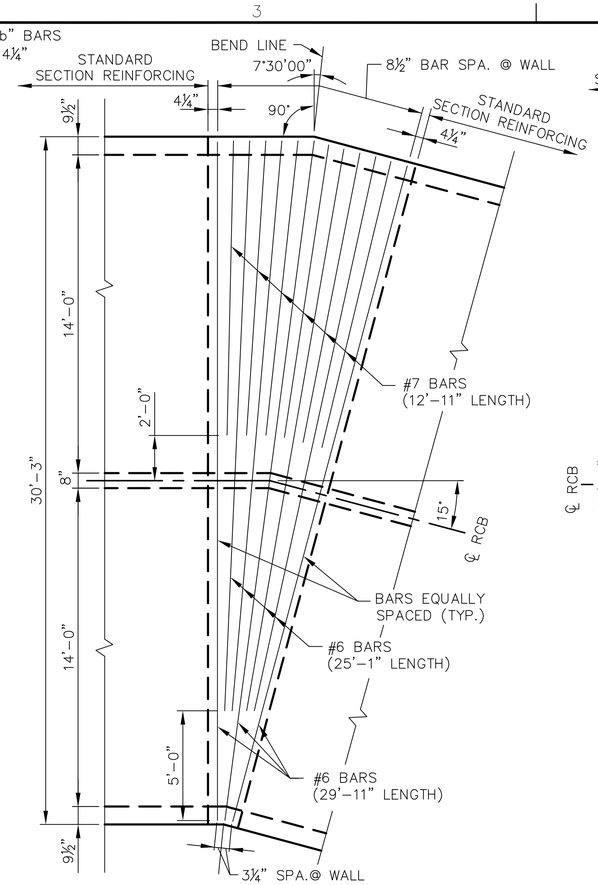

TRANSVERSE REINFORCING LAYOUT

DOUBLE 14'x10' RCB @ 15° BENDS (CAST-IN-PLACE)

BOTTOM OF TOP SLAB & TOP OF BOTTOM SLAB

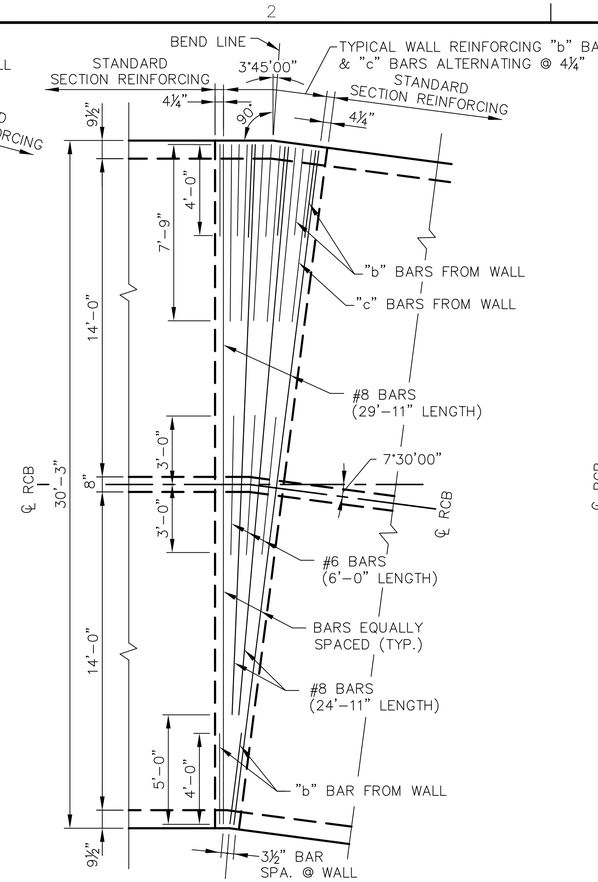

TRANSVERSE REINFORCING LAYOUT

DOUBLE 14'x10' RCB @ 7°30'00" BEND (CAST-IN-PLACE)

TOP OF TOP SLAB & BOTTOM OF BOTTOM SLAB

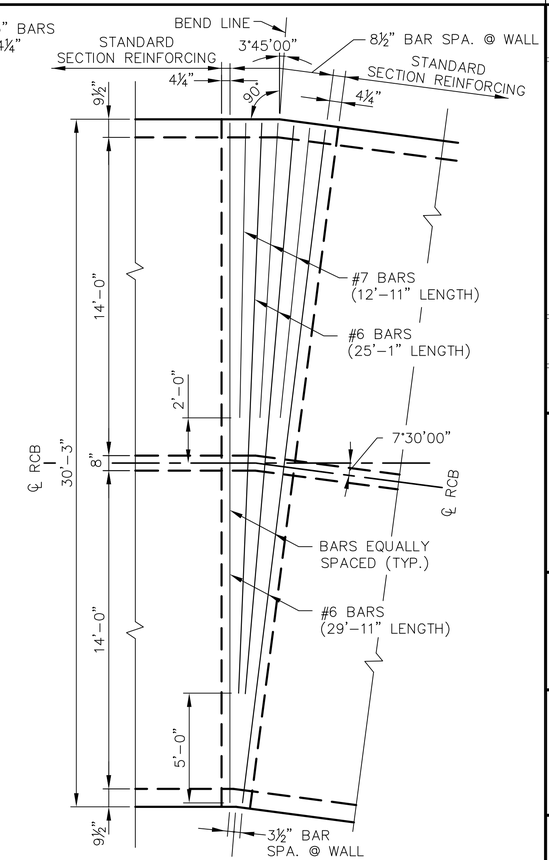

TRANSVERSE REINFORCING LAYOUT

DOUBLE 14'x10' RCB @ 7°30'00" BEND (CAST-IN-PLACE)

BOTTOM OF TOP SLAB & TOP OF BOTTOM SLAB

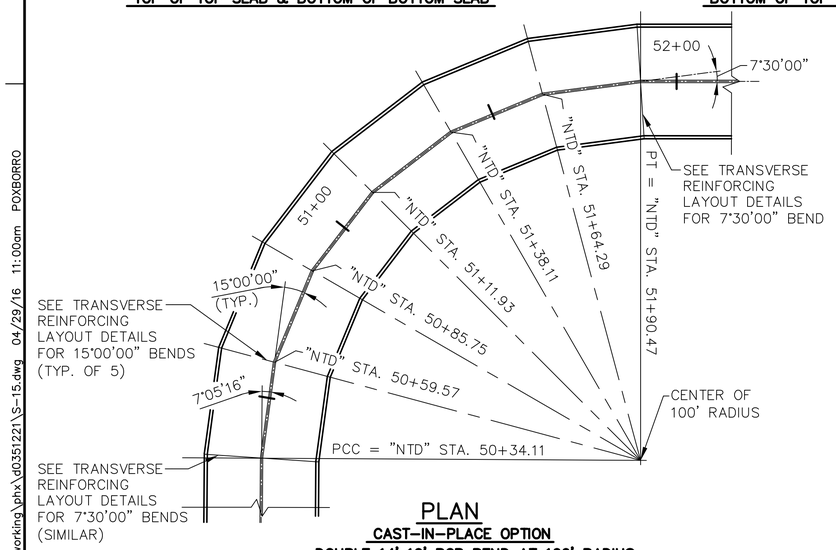

PLAN

CAST-IN-PLACE OPTION

DOUBLE 14'x10' RCB BEND AT 100' RADIUS

"NTD" STA. 50+34.11 PCC TO "NTD" STA. 51+90.47 PT

SEE SHEET DT-4 FOR STANDARD SECTION REINFORCING NOT SHOWN AND DIMENSIONS T1, T2, &T3

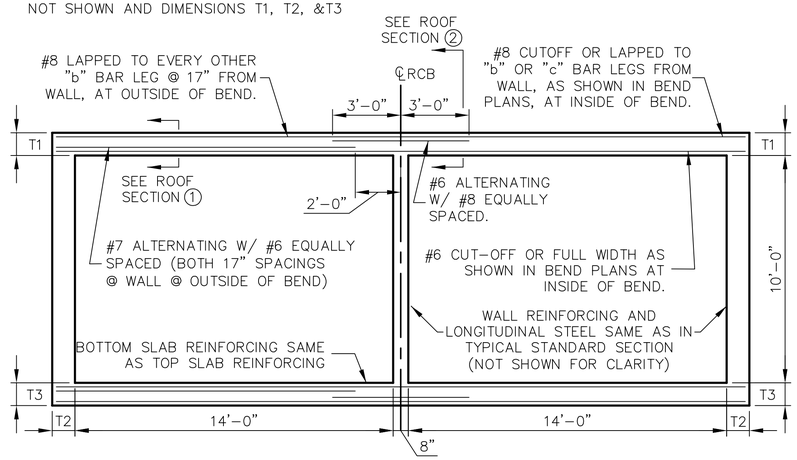

SECTION AT BENDS

DOUBLE 14'x10' RCB

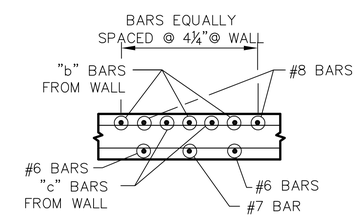

ROOF SECTION 1

INVERT SIMILAR

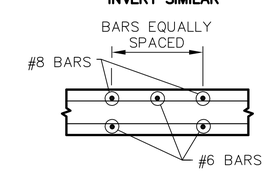

ROOF SECTION 2

INVERT SIMILAR

NOTES:

1. FIELD BEND LONGITUDINAL #4 BARS IN SLABS AND WALLS AT BEND LINE.

Avoid cutting underground utility lines. It's costly.
Call before you Dig.
1-800-227-2600
UNDERGROUND SERVICE ALERT (USA)

SAFETY ALERT
Call before you Overhead
775-834-7590
NV Energy Construction Line
24hrs. Prior Notice Required
OVERHEAD SERVICE ALERT

REV No.	DATE	DESCRIPTION	APPROVED

DESIGNED BY:
DRAWN BY:
CHECKED BY:
APPROVED BY:
SCALE
HORIZ:
VERT:
FIELD BOOK

HDR Engineering, Inc.
9805 Double R Blvd.
Suite 101
Reno, NV 89521
Phone: 775-337-4700

City of Sparks

NORTH TRUCKEE DRAIN REALIGNMENT PHASE 3

BEND DETAILS

FOR DOUBLE 14'x10' RCB (CAST-IN-PLACE)

CITY OF SPARKS, NEVADA, PUBLIC WORKS DEPARTMENT

STATE OF NEVADA PROFESSIONAL ENGINEER CARY A. ANDERSON Exp. 12/31/2016 CIVIL No. 9522 5/11/16

SHEET No

S-15

SHT OF

C:\pwworking\phx\d0351221\S-15.dwg 04/29/16 11:00am POXBORRO

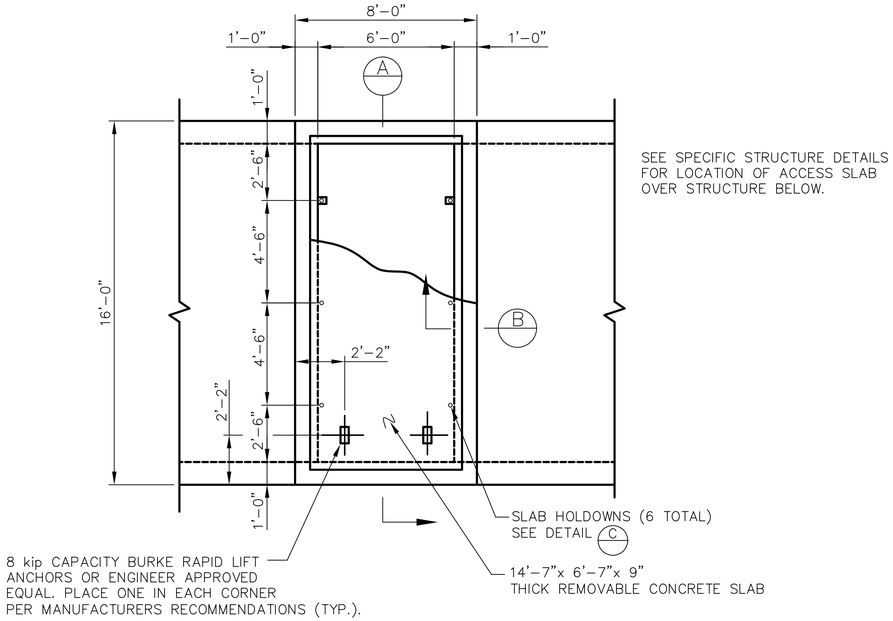

PLAN–TYPICAL 8'–0"x16'–0" ACCESS RISER

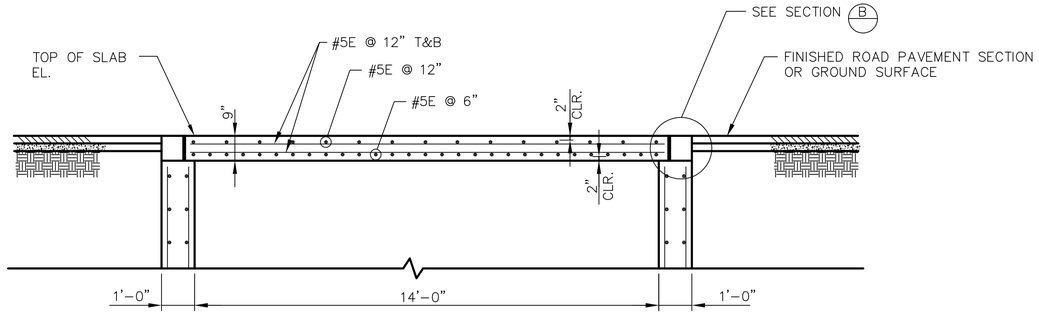

SECTION A

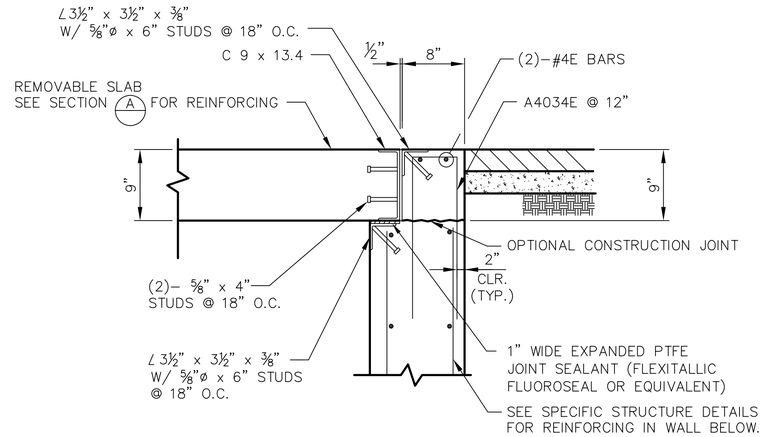

SECTION B

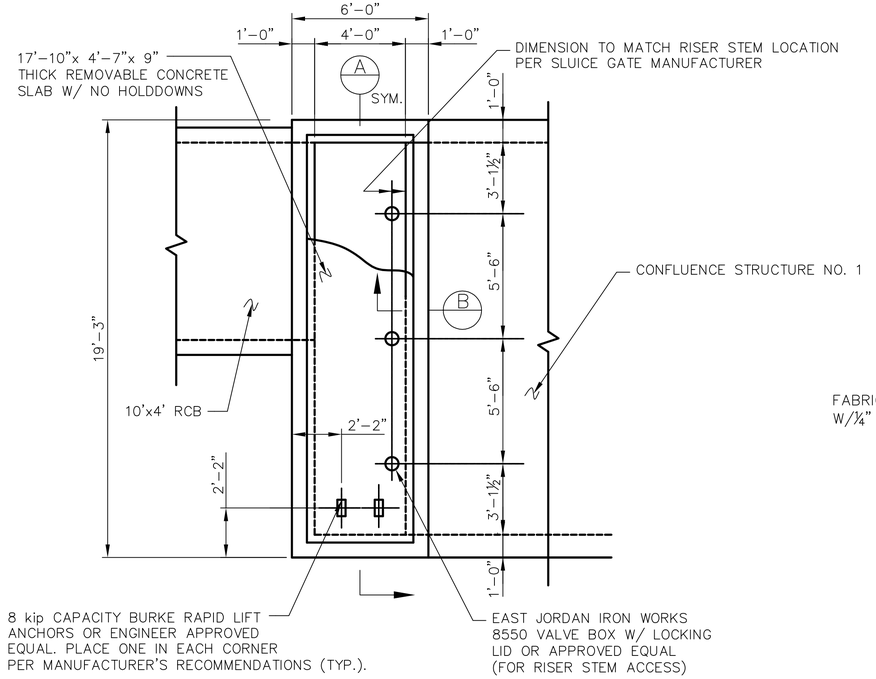

PLAN–6'–0"x19'–3" ACCESS RISER

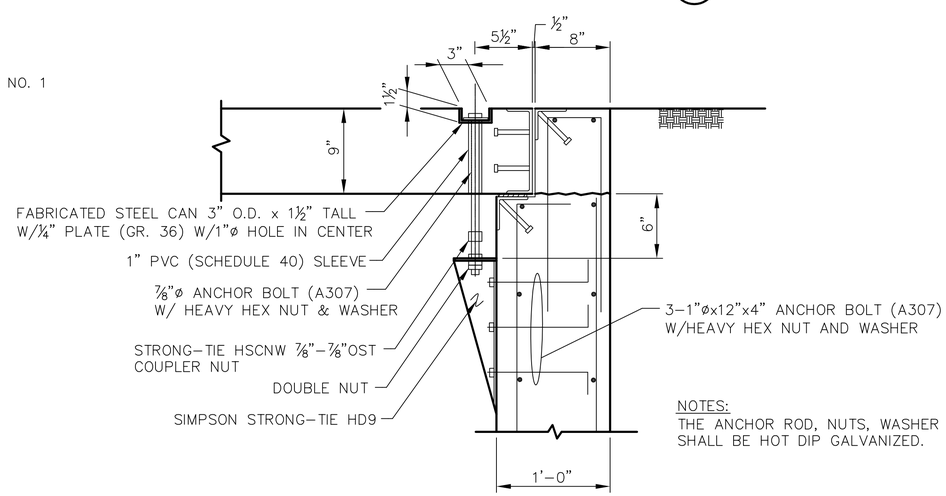

NOTES:
THE ANCHOR ROD, NUTS, WASHER & COUPLER NUT SHALL BE HOT DIP GALVANIZED.

HOLDOWN DETAIL C

Avoid cutting underground utility lines. It's costly.
Call before you Dig.
1-800-227-2600
UNDERGROUND SERVICE ALERT (USA)

SAFETY ALERT
Call before you Overhead
775-834-7590
NV Energy Construction Line
24hrs. Prior Notice Required
OVERHEAD SERVICE ALERT

REV No.	DATE	DESCRIPTION	APPROVED

DESIGNED BY: GAA
DRAWN BY: CLG
CHECKED BY:
APPROVED BY:
SCALE NTS
HORIZ:
VERT:
FIELD BOOK

HDR Engineering, Inc.
9805 Double R Blvd.
Suite 101
Reno, NV 89521
Phone: 775-337-4700

City of Sparks

NORTH TRUCKEE DRAIN REALIGNMENT PHASE 3

REMOVABLE CONCRETE SLAB DETAILS FOR MAINTENANCE ACCESS

CITY OF SPARKS, NEVADA, PUBLIC WORKS DEPARTMENT

STATE OF NEVADA PROFESSIONAL ENGINEER GARY A. ANDERSON Exp. 12/31/2016 CIVIL No. 15032 5/11/16

SHEET No
S-16
SHT OF

C:\pwworking\phx\d0351221\S-16.dwg 04/29/16 11:00am POXBORRO

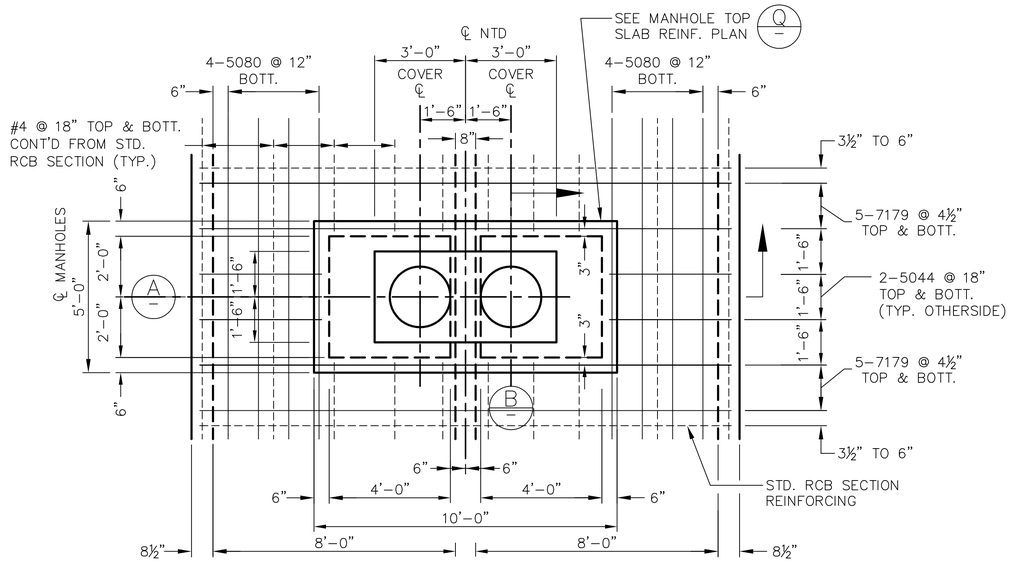

RCB TOP SLAB REINFORCING PLAN AT MANHOLE RISER

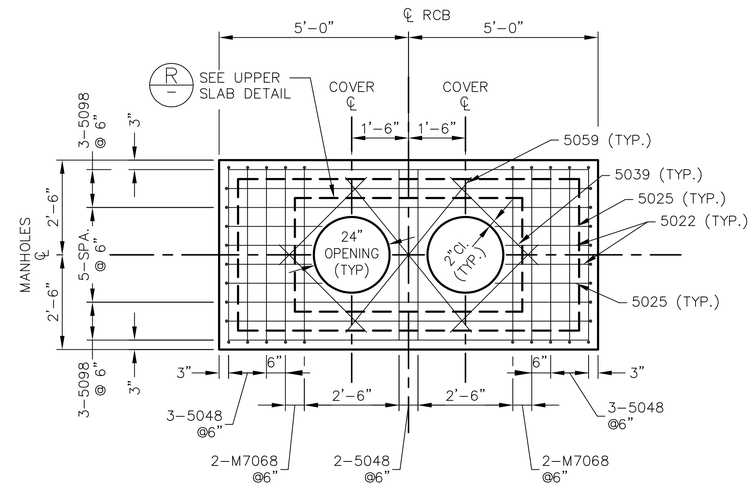

MANHOLE TOP SLAB REINFORCING PLAN

Q

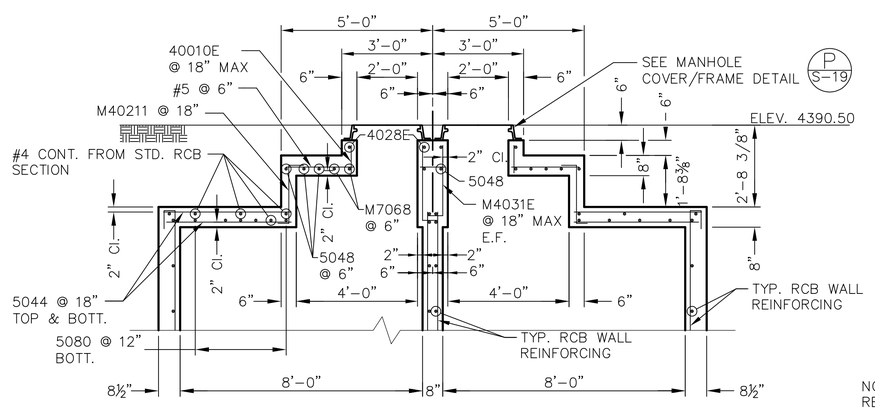

NOTE:
REINFORCING STEEL
TYP. BOTH SIDES

SECTION A

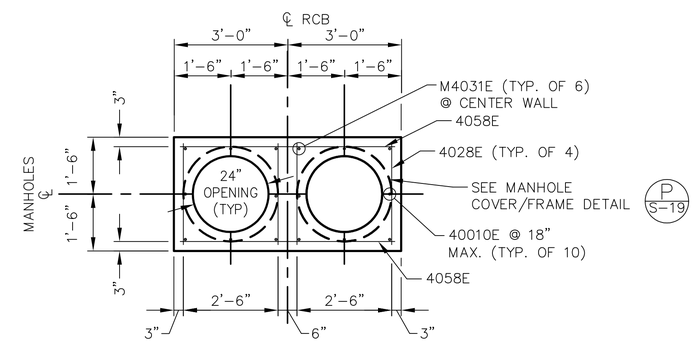

UPPER SLAB DETAIL

R

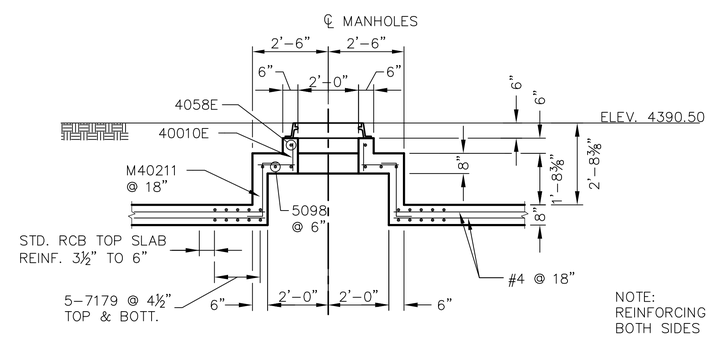

NOTE:
REINFORCING TYPICAL
BOTH SIDES

SECTION B

Avoid cutting underground utility lines. It's costly.
Call before you Dig.
1-800-227-2600
UNDERGROUND SERVICE ALERT (USA)

SAFETY ALERT
Call before you Overhead
775-834-7590
NV Energy Construction Line
24hrs. Prior Notice Required
OVERHEAD SERVICE ALERT

REV No.	DATE	DESCRIPTION	APPROVED

DESIGNED BY: GAA
DRAWN BY: KDG
CHECKED BY:
APPROVED BY:
SCALE
HORIZ:
VERT:
FIELD BOOK

HDR Engineering, Inc.
9805 Double R Blvd.
Suite 101
Reno, NV 89521
Phone: 775-337-4700

City of Sparks

NORTH TRUCKEE DRAIN REALIGNMENT PHASE 3

CAST-IN-PLACE MANHOLE RISER DETAILS
FOR CAST-IN-PLACE DOUBLE 8'X8' RCB

CITY OF SPARKS, NEVADA, PUBLIC WORKS DEPARTMENT

STATE OF NEVADA
PROFESSIONAL ENGINEER
GARY A. ANDERSON
Exp. 12/31/2016
CIVIL
No. 5522
5/11/16

SHEET No
S-17
SHT OF

C:\pwworking\phx\d0351221\S-17.dwg 04/29/16 11:00am POXBORRO

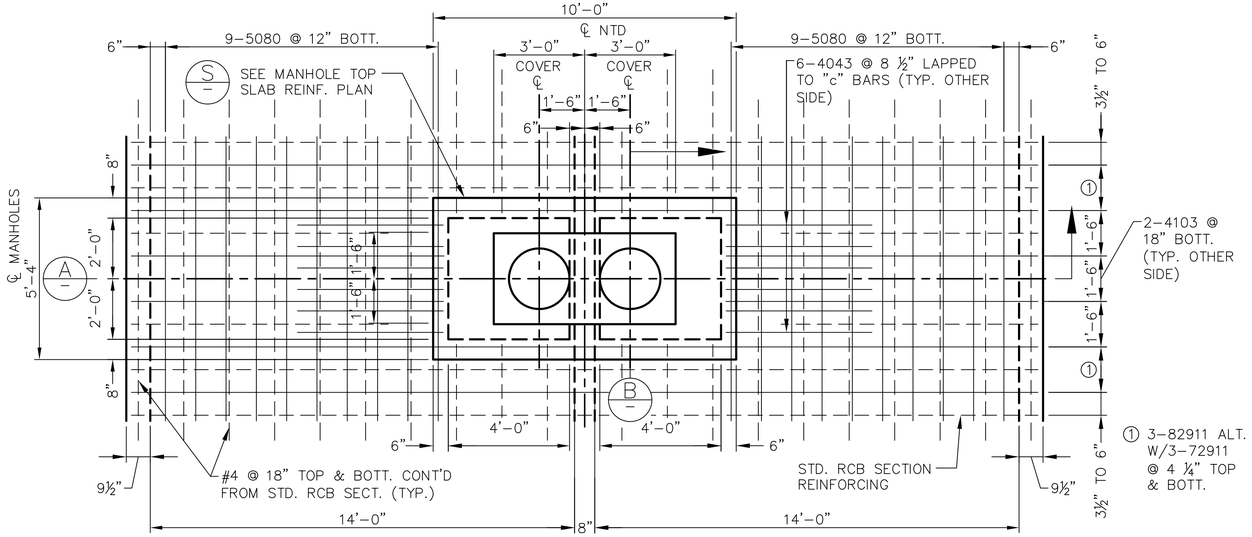

RCB TOP SLAB REINFORCING PLAN AT MANHOLE RISER

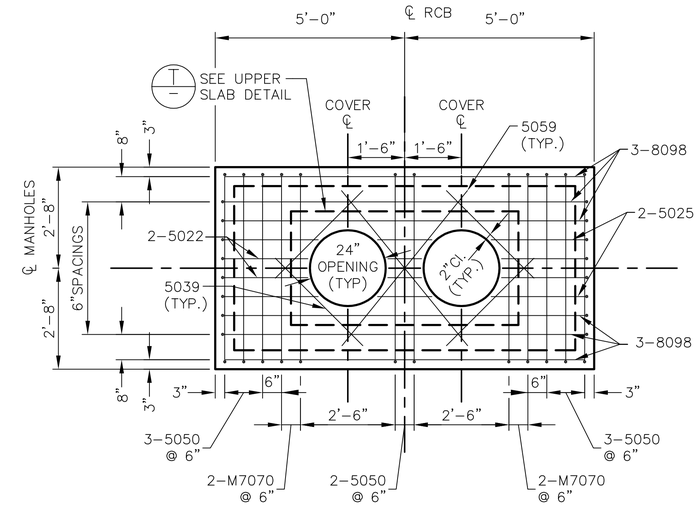

MANHOLE TOP SLAB REINFORCING PLAN (S)

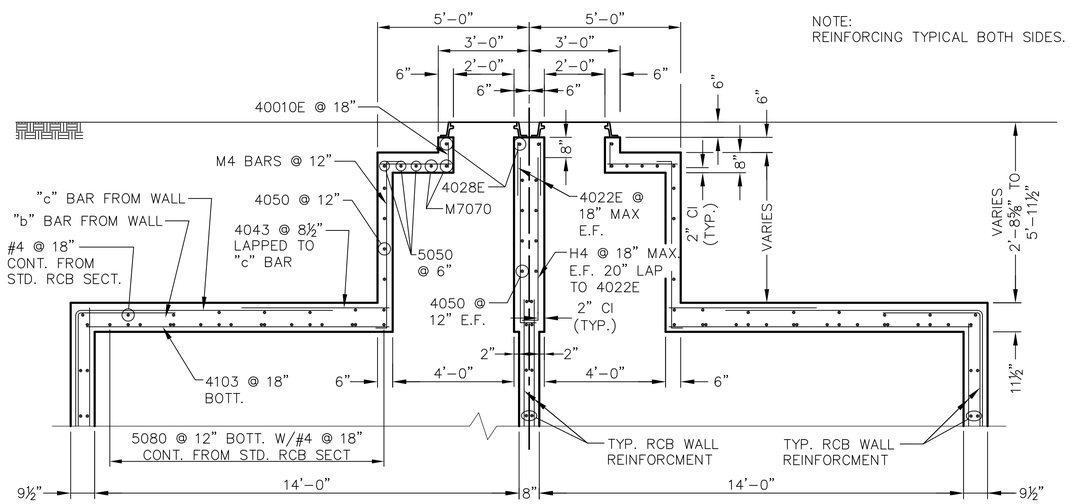

SECTION (A)

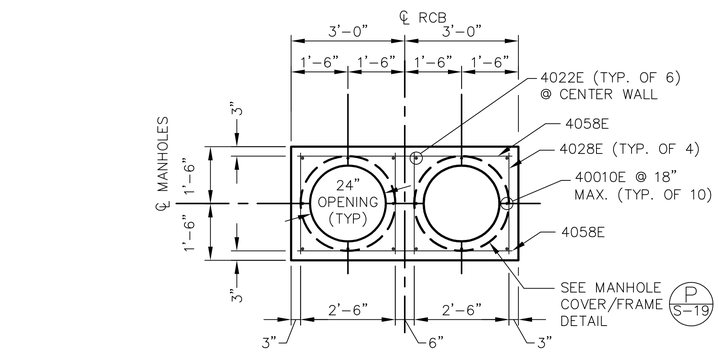

UPPER SLAB DETAIL (T)

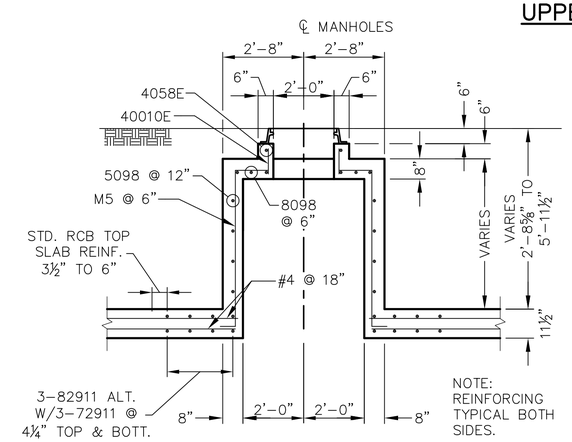

SECTION (B)

Avoid cutting underground utility lines. It's costly.
Call before you Dig.
1-800-227-2600
UNDERGROUND SERVICE ALERT (USA)

SAFETY ALERT
Call before you Overhead
775-834-7590
NV Energy Construction Line
24hrs. Prior Notice Required
OVERHEAD SERVICE ALERT

REV No.	DATE	DESCRIPTION	APPROVED

DESIGNED BY: GAA
DRAWN BY: KDG
CHECKED BY:
APPROVED BY:
SCALE
HORIZ:
VERT:
FIELD BOOK

HDR Engineering, Inc.
9805 Double R Blvd.
Suite 101
Reno, NV 89521
Phone: 775-337-4700

City of Sparks

NORTH TRUCKEE DRAIN REALIGNMENT PHASE 3

CAST-IN-PLACE MANHOLE RISER DETAILS FOR CAST-IN-PLACE DOUBLE 14'X10' RCB

CITY OF SPARKS, NEVADA, PUBLIC WORKS DEPARTMENT

STATE OF NEVADA PROFESSIONAL ENGINEER GARY A. ANDERSON Exp. 12/31/2016 CIVIL No. 5522 5/11/16

SHEET No
S-18

SHT OF

C:\pwworking\phx\d0351221\S-18.dwg 04/29/16 11:01am POXBORRO

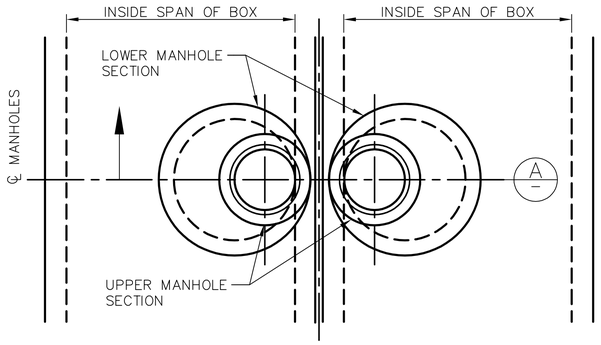

MANHOLE ON PRECAST RCB'S PLAN

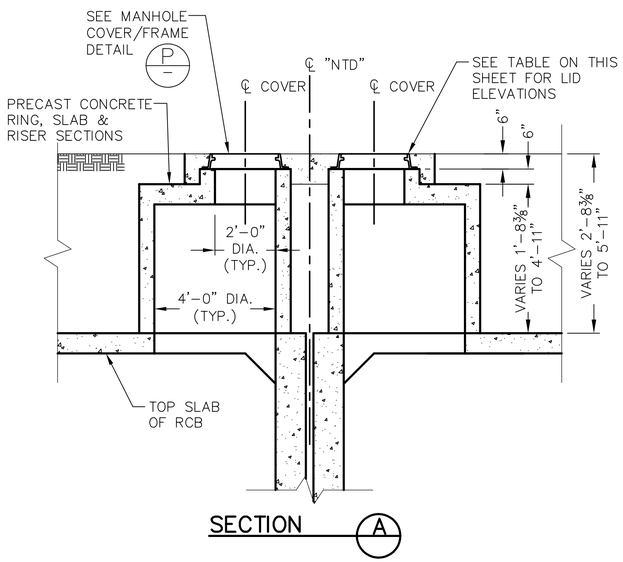

SECTION A

PRECAST CONCRETE MANHOLE GENERAL NOTES

1. PRECAST CONCRETE MANHOLE SECTIONS ARE TO BE DESIGNED ACCORDING TO THE DESIGN SPECIFICATIONS AND DESIGN LOADS GIVEN ON SHEET S-1.
2. THE COMPLETE MANHOLE SHALL BE WATERTIGHT AND RESIST UPLIFT FOR THE INTERNAL WATER PRESSURE OF THE STORM DRAIN BASED ON 9' MAXIMUM HYDRAULIC GRADE LINE ABOVE THE RCB TOP SLABS.
3. THE CONTRACTOR SHALL SUBMIT TWO SETS OF THE STRUCTURAL DESIGN ANALYSIS AND SHOP DRAWINGS FOR THE PRECAST MANHOLE AND THE SUPPORTING PRECAST RCB UNIT BELOW THE MANHOLE FOR REVIEW AND APPROVAL, STAMPED BY A PROFESSIONAL ENGINEER REGISTERED IN NEVADA.

PRECAST MANHOLE RISER DETAILS FOR PRECAST RCB'S

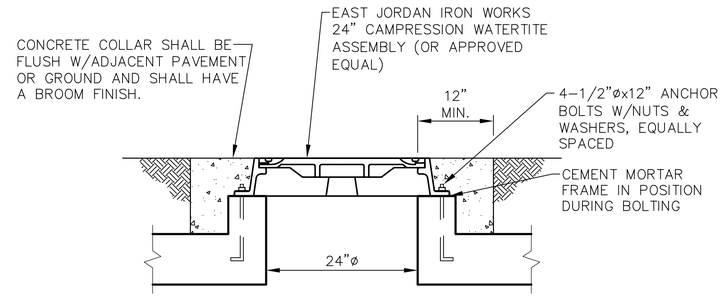

MANHOLE COVER/FRAME DETAIL (P)

CAST-IN-PLACE CONCRETE MANHOLE GENERAL NOTES

1. THE CONCRETE MANHOLE DESIGN WAS ACCORDING TO THE DESIGN SPECIFICATIONS, DESIGN LOADS, AND WITH MATERIALS SHOWN ON SHEET S-1, AND AS NOTED BELOW.
2. CONCRETE SHALL BE CLASS AA MODIFIED, WITH AN ULTIMATE CONCRETE COMPRESSIVE STRENGTH OF F'c = 3250 PSI AT 28 DAYS.
3. THE COMPLETED MANHOLE SHALL BE WATERTIGHT.

CAST-IN-PLACE MANHOLE RISER QUANTITIES*

STRUCTURE LOCATION	CONCRETE (CY)	REINFORCING STEEL (LBS)	REINFORCING STEEL (EPOXY COATED)(LBS)	REINFORCING STEEL (TOTAL)(LBS)
"NTD" STA. 21+94	1.19	196	33	229
"NTD" STA. 30+22.30	0.82	750	29	779
"NTD" STA. 36+00	3.10	988	29	1017
"NTD" STA. 41+48.50	2.68	937	29	966
"NTD" STA. 46+70.50	3.05	984	29	1013
"NTD" STA. 51+74.50	3.54	1015	29	1044

*NOTE THAT THESE QUANTITIES ARE INCLUDED IN THE CIP RCB QUANTITIES, AND INCLUDE THE ADJUSTMENTS TO THE STANDARD RCB SECTION. ALSO THE REINFORCING STEEL (EPOXY COATED) IS NOT SEPARATED FOR PAYMENT IN THE RCB QUANTITIES.

MANHOLE ELEVATIONS TABLE

STRUCTURE LOCATION	MANHOLE LID ELEVATIONS	TOP OF RCB ELEVATIONS	
		w/PRECAST RCB	w/CIP RCB
"NTD" STA. 21+94	4390.50	4387.80	4387.80
"NTD" STA. 30+22.30	4392.40	4389.72	4389.68
"NTD" STA. 36+00	4394.80	4389.45	4389.41
"NTD" STA. 41+48.50	4394.00	4389.18	4389.14
"NTD" STA. 46+70.50	4394.20	4388.92	4388.88
"NTD" STA. 51+74.50	4394.60	4388.69	4388.65

CAST-IN-PLACE MANHOLE RISER DETAILS FOR CAST-IN-PLACE RCB'S

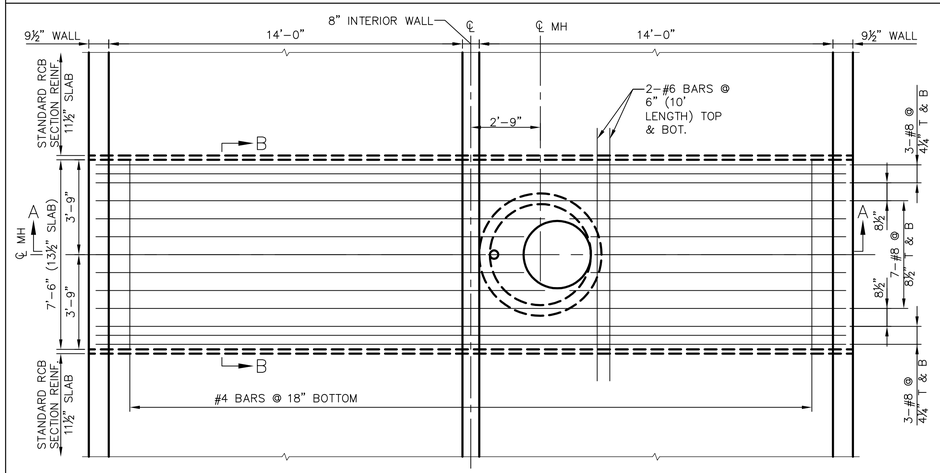

BOTTOM SLAB REINFORCING AT MANHOLE SUMP "NTD" STA. 41+48.50

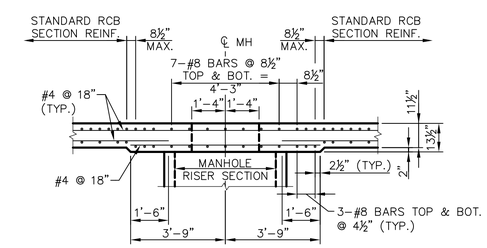

SECTION B-B

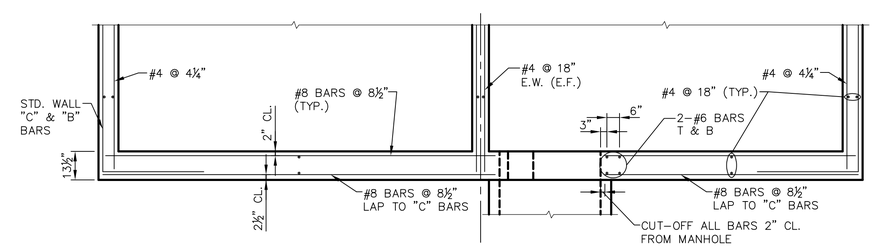

SECTION A-A

Avoid cutting underground utility lines. It's costly.
Call before you Dig.
1-800-227-2600
UNDERGROUND SERVICE ALERT (USA)

SAFETY ALERT
Call before you Overhead
775-834-7590
NV Energy Construction Line
24hrs. Prior Notice Required
OVERHEAD SERVICE ALERT

REV No.	DATE	DESCRIPTION	APPROVED

DESIGNED BY: GAA
DRAWN BY: KDG
CHECKED BY:
APPROVED BY:
SCALE
HORIZ:
VERT:
FIELD BOOK

HDR
HDR Engineering, Inc.
9805 Double R Blvd.
Suite 101
Reno, NV 89521
Phone: 775-337-4700

City of Sparks

NORTH TRUCKEE DRAIN REALIGNMENT PHASE 3

MANHOLE RISER DETAILS

CITY OF SPARKS, NEVADA, PUBLIC WORKS DEPARTMENT

STATE OF NEVADA PROFESSIONAL ENGINEER GARY A. ANDERSON Exp. 12/31/2016 CIVIL No. 15522 5/11/16

SHEET No
S-19
SHT OF

C:\pwworking\phx\d0351221\S-19.dwg 04/29/16 11:01am POXBORRO

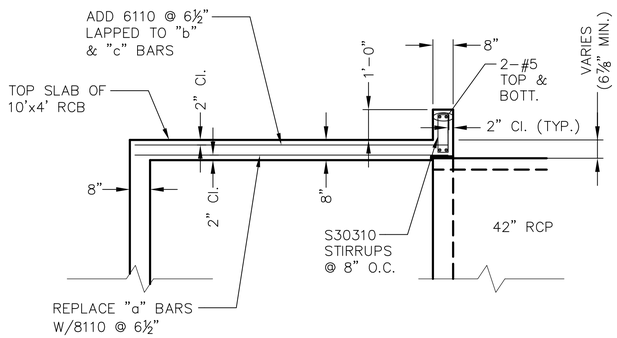

SECTION (A)

STANDARD REINFORCING IN 10'x4' RCB NOT SHOWN, SEE SHEET DT-4. "a", "b", "c" BARS ARE SHOWN THERE.

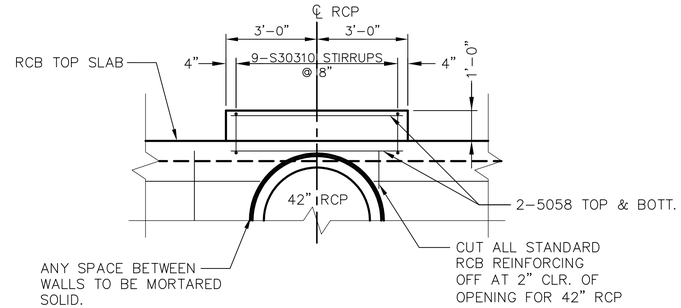

SECTION (B)

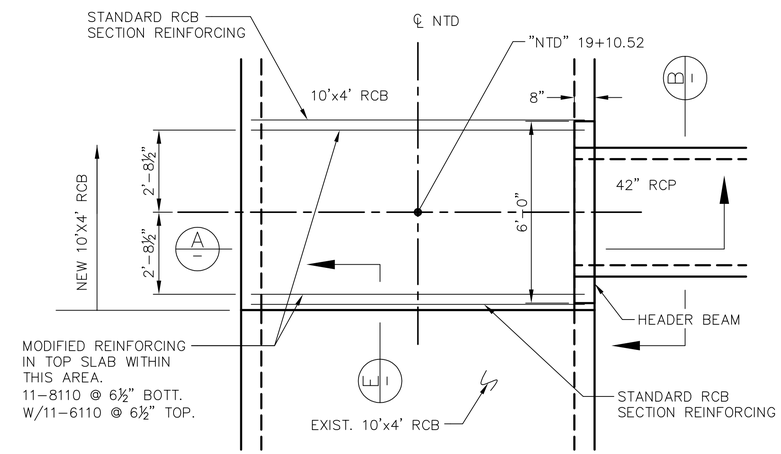

PLAN
"NTD" 19+10.52 (C)

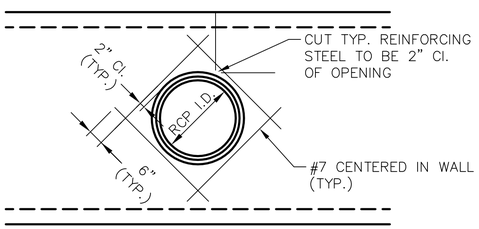

SECTION (D)

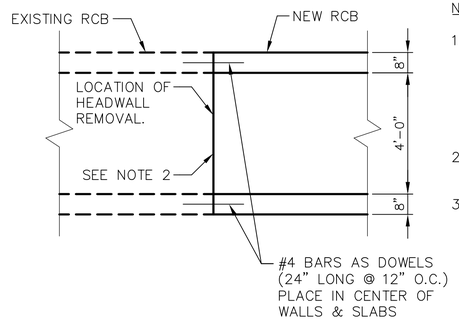

NOTES:

1. DOWEL HOLES SHALL BE DRILLED 12" INTO EXISTING CONCRETE. DIAMETER OF HOLE SHALL BE ¾". DOWELS SHALL BE EPOXIED INTO CLEAN HOLES. EPOXY SHALL CONFORM TO ASTM C881, TYPE IV, GRADE 3, CLASS A, B, OR C.
2. ROUGHEN EXISTING SURFACE TO ¼" AMPLITUDE.
3. EXISTING REINFORCING PROTRUDING FROM EXISTING RCB AFTER THE HEADWALL REMOVAL MAY REMAIN PROVIDING IT IS CUT OFF AT ABOUT 1' AND DOES NOT INTERFERE WITH THE NEW RCB REINFORCING.

10'x4' RCB CONNECTION DETAIL (E)
"NTD" 19+07.33

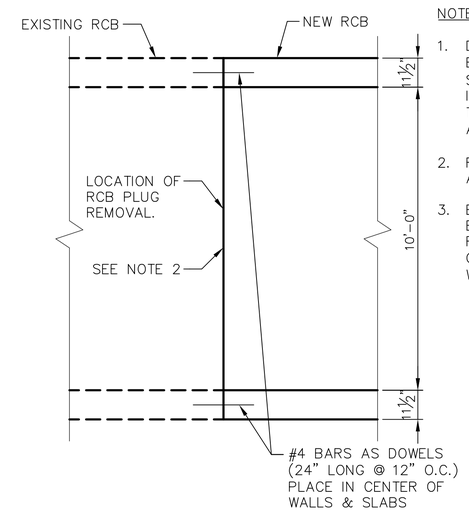

NOTES:

1. DOWEL HOLES SHALL BE DRILLED 12" INTO EXISTING CONCRETE. DIAMETER OF HOLE SHALL BE ¾". DOWELS SHALL BE EPOXIED INTO CLEAN HOLES. EPOXY SHALL CONFORM TO ASTM C881, TYPE IV, GRADE 3, CLASS A, B, OR C.
2. ROUGHEN EXISTING SURFACE TO ¼" AMPLITUDE.
3. EXISTING REINFORCING PROTRUDING FROM EXISTING RCB AFTER THE RCB PLUG REMOVAL MAY REMAIN PROVIDING IT IS CUT OFF AT ABOUT 1' AND DOES NOT INTERFERE WITH THE NEW RCB REINFORCING.

DOUBLE 14'x10' RCB CONNECTION DETAIL (F)
"NTD" 53+50

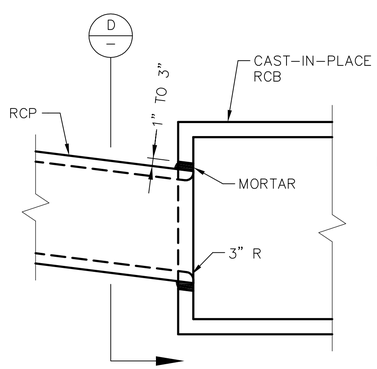

NOTES:

1. FORM OPENING IN RCB TO THE LIMITS SHOWN AROUND THE RCP, AND TO THE PLAN ELEVATIONS AND SLOPES.
2. CUT OR CHIP END OF RCP FLUSH WITH INSIDE FACE OF RCB, AND WITH ROUNDED EDGES.

TYPICAL CAST-IN-PLACE RCB PENETRATION DETAIL
"NTD" 23+58 & "NTD" 34+71.44

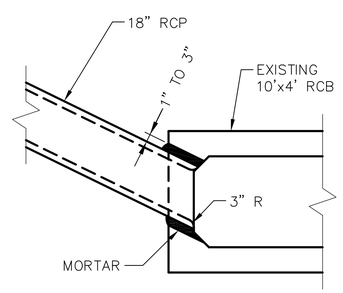

NOTES:

1. CUT OR CHIP WALL OF RCB TO THE LIMITS SHOWN AROUND THE RCP.
2. CUT OR CHIP END OF RCP FLUSH WITH INSIDE FACE OF RCB, AND WITH ROUNDED EDGES.

BOX PENETRATION DETAIL
"NTD" 18+99.59

REV No.	DATE	DESCRIPTION	APPROVED

DESIGNED BY: GAA
DRAWN BY: CLG
CHECKED BY:
APPROVED BY:
SCALE
HORIZ:
VERT:
FIELD BOOK

HDR Engineering, Inc.
9805 Double R Blvd.
Suite 101
Reno, NV 89521
Phone: 775-337-4700

City of Sparks

NORTH TRUCKEE DRAIN REALIGNMENT PHASE 3

"RCP CONNECTIONS TO MAIN RCB STORM DRAIN" DETAILS

CITY OF SPARKS, NEVADA, PUBLIC WORKS DEPARTMENT

Avoid cutting underground utility lines. It's costly.
Call before you Dig.
1-800-227-2600
UNDERGROUND SERVICE ALERT (USA)

SAFETY ALERT
Call before you Overhead
775-834-7590
NV Energy Construction Line
24hrs. Prior Notice Required
OVERHEAD SERVICE ALERT

REGISTERED PROFESSIONAL ENGINEER STATE OF NEVADA
GARY A. ANDERSON
Exp. 12/31/2016
CIVIL
PROFESSIONAL ENGINEER No. 5532
5/11/16

SHEET No
S-20
SHT OF

C:\pwworking\phx\d0351221\S-20.dwg 04/29/16 11:01am POXBORRO

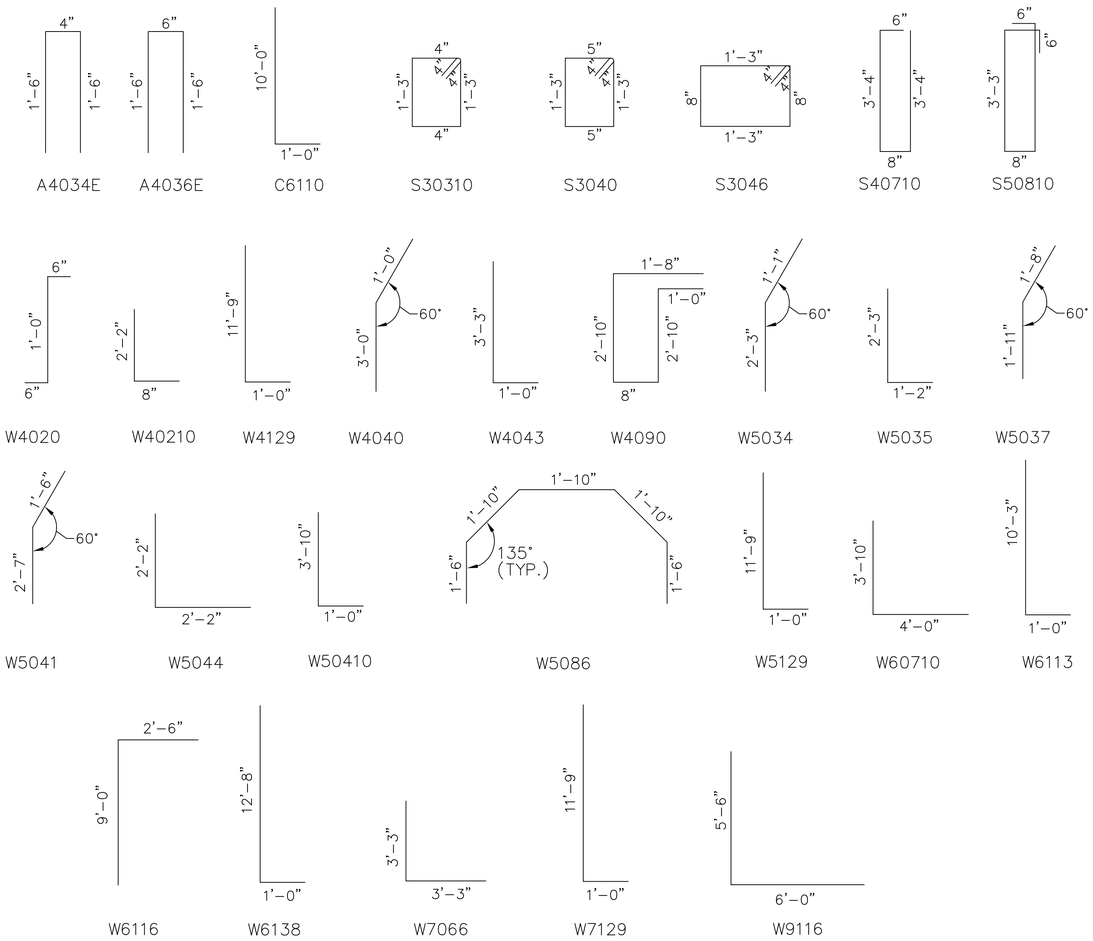

CONFLUENCE STRUCTURE NO. 1

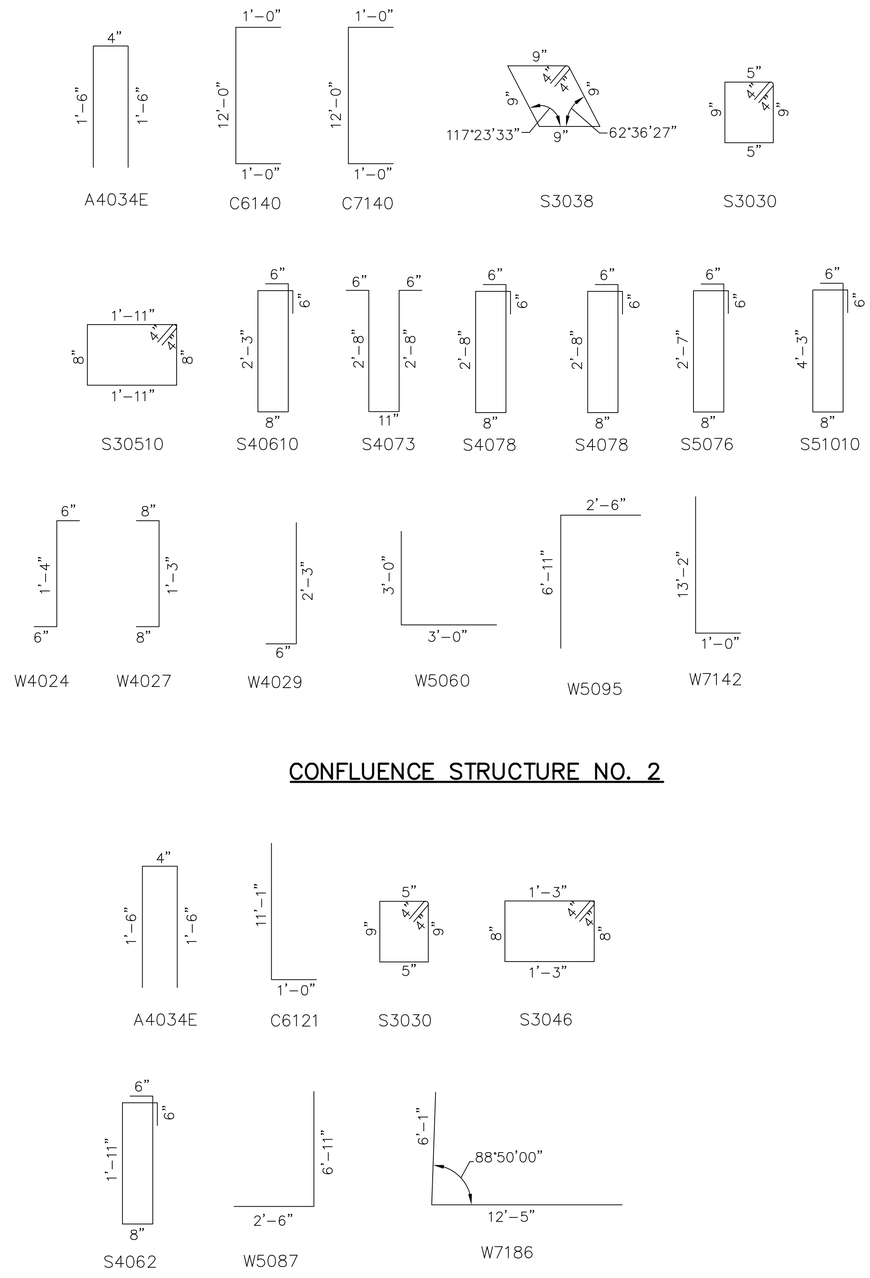

CONFLUENCE STRUCTURE NO. 2

ACCESS VAULT (DOUBLE 8'x8' RCB)

Avoid cutting underground utility lines. It's costly.
Call before you Dig.
1-800-227-2600
UNDERGROUND SERVICE ALERT (USA)

SAFETY ALERT
Call before you Overhead
775-834-7590
NV Energy Construction Line
24hrs. Prior Notice Required
OVERHEAD SERVICE ALERT

REV No	DATE	DESCRIPTION	APPROVED

DESIGNED BY: GAA
DRAWN BY:
CHECKED BY: CLG
APPROVED BY:
SCALE
HORIZ:
VERT:
FIELD BOOK

HDR Engineering, Inc.
9805 Double R Blvd.
Suite 101
Reno, NV 89521
Phone: 775-337-4700

City of Sparks

NORTH TRUCKEE DRAIN REALIGNMENT PHASE 3

BAR BEND DIAGRAMS

CITY OF SPARKS, NEVADA, PUBLIC WORKS DEPARTMENT

STATE OF NEVADA
GARY A. ANDERSON
Exp. 12/31/2016
CIVIL
PROFESSIONAL ENGINEER No. 5522
5/11/16

SHEET No
S-21
SHT OF

C:\pwworking\phx\d0351221\S-21.dwg 04/29/16 11:01am POXBORRO

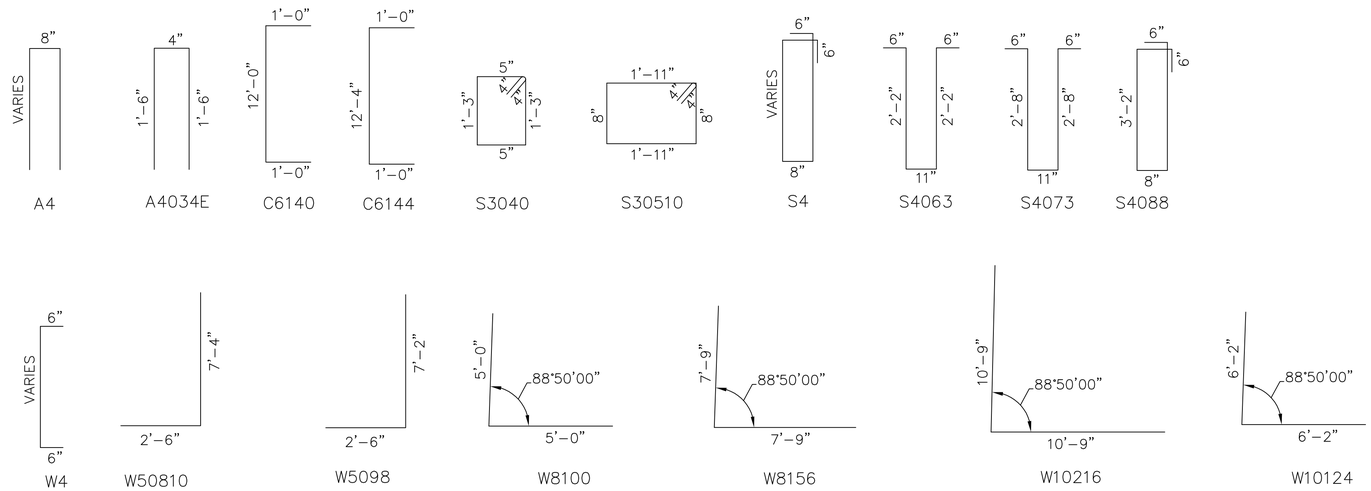

ACCESS VAULT (DOUBLE 14'x10' RCB)

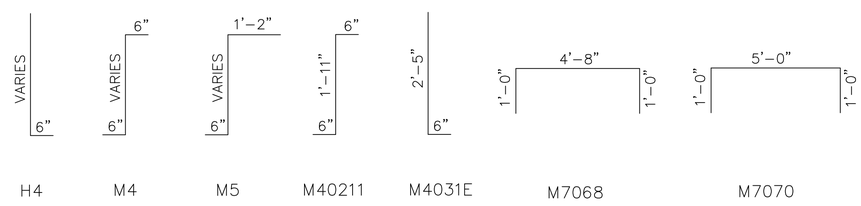

MANHOLE RISERS

Avoid cutting underground utility lines. It's costly.
Call before you Dig.
1-800-227-2600
UNDERGROUND SERVICE ALERT (USA)

SAFETY ALERT
Call before you Overhead
775-834-7590
NV Energy Construction Line
24hrs. Prior Notice Required
OVERHEAD SERVICE ALERT

REV No	DATE	DESCRIPTION	APPROVED

DESIGNED BY: GAA
DRAWN BY:
CHECKED BY: CLG
APPROVED BY:
SCALE
HORIZ:
VERT:
FIELD BOOK

HDR Engineering, Inc.
9805 Double R Blvd.
Suite 101
Reno, NV 89521
Phone: 775-337-4700

City of Sparks

NORTH TRUCKEE DRAIN REALIGNMENT PHASE 3

BAR BEND DIAGRAMS

CITY OF SPARKS, NEVADA, PUBLIC WORKS DEPARTMENT

REGISTERED PROFESSIONAL ENGINEER STATE OF NEVADA
GARY A. ANDERSON
Exp. 12/31/2016
CIVIL
PROFESSIONAL No. 5522
5/11/16

SHEET No
S-22
SHT OF

C:\pwworking\phx\d0351221\S-22.dwg 04/29/16 11:01am POXBORRO

STATION LOCATIONS	DESCRIPTION	PRECAST CONCRETE ACCESS COVER	MANHOLE GRATE AND FRAME	CLASS AA CONCRETE, MODIFIED (MAJOR)	STRUCTURAL STEEL	REINFORCING STEEL (EPOXY COATED)	REINFORCING STEEL
		EACH	EACH	CU YD	LB	LB	LB
"W" STA. 218+70.35	CONSTRUCT SPLICE COLLARS LT AND RT			13.9			1661
	SEE SHEET R-3						
"W" STA. 218+70.35 TO STA. 219+07.72	CONSTRUCT 6'X6' RCB RT			41.5			7263
	SEE SHEETS R-2 AND R-3						
"W" STA. 218+70.35 TO STA. 219+09.80	CONSTRUCT 6'X6' RCB LT			42.6			7422
	SEE SHEETS R-2 AND R-3						
"W" STA. 219+07.72 TO STA. 219+35.18	CONSTRUCT 6'X6' RCB RT			17.0			3688
	SEE SHEETS DT-5 AND S-14						
"W" STA. 219+09.80 TO STA. 219+42.43	CONSTRUCT 6'X6' RCB LT			14.6			3188
	SEE SHEETS DT-5 AND S-14						
"NTD" STA. 19+07.33 TO STA. 19+22.98	CONSTRUCT 10'X4' RCB			11.6			2913
	SEE SHEETS DT-5 AND S-20						
"NTD" STA. 19+22.98 TO STA. 19+66.04	CONSTRUCT CONFLUENCE STRUCTURE NO. 1	2		124.5	1580	365	25,250
	SEE SHEETS S-2 TO S-5						
"NTD" STA. 19+66.04 TO STA. 27+20.50	CONSTRUCT DOUBLE 8'X8' RCB			1110.2			274,980
	SEE SHEETS DT-5 AND S-1						
"NTD" STA. 24+26.78 TO STA. 24+42.78	CONSTRUCT ACCESS VAULT IN DOUBLE 8'X8' RCB	1		36.9	770	170	5217
	SEE SHEET S-10						
"E" STA. 325+18.61 TO STA. 327+28.19	CONSTRUCT DOUBLE 8'X8' RCB			617.1			150,624
	SEE SHEETS R-6 TO R-9						
"NTD" STA. 27+20.50 TO STA. 27+46.50	CONSTRUCT CONFLUENCE STRUCTURE NO. 2	1		83.8	770	170	15,330
	SEE SHEETS S-6 TO S-9						
"NTD" STA. 27+46.50 TO STA. 53+50.00	CONSTRUCT DOUBLE 10'X14' RCB			–			–
	SEE SHEETS DT-5 AND S-1						
"NTD" STA. 33+20.09	CONSTRUCT ACCESS VAULT IN DOUBLE 10'X14' RCB	1		63.5	770	170	10,201
	SEE SHEETS S-11 TO S-13						
"NTD" STA. 38+80.00	CONSTRUCT ACCESS VAULT IN DOUBLE 10'X14' RCB	1		76.3	770	170	12,045
	SEE SHEETS S-11 TO S-13						
"NTD" STA. 44+17.00	CONSTRUCT ACCESS VAULT IN DOUBLE 10'X14' RCB	1		65.7	770	170	10,387
	SEE SHEETS S-11 TO S-13						
"NTD" STA. 49+24.00	CONSTRUCT ACCESS VAULT IN DOUBLE 10'X14' RCB	1		76.3	770	170	12,045
	SEE SHEETS S-11 TO S-13						

Avoid cutting underground utility lines. It's costly.
Call before you Dig.
1-800-227-2600
UNDERGROUND SERVICE ALERT (USA)

SAFETY ALERT
Call before you Overhead
775-834-7590
NV Energy Construction Line
24hrs. Prior Notice Required
OVERHEAD SERVICE ALERT

REV No.	DATE	DESCRIPTION	APPROVED

DESIGNED BY: GAA
DRAWN BY: CLG
CHECKED BY:
APPROVED BY:
SCALE
HORIZ:
VERT:
FIELD BOOK

HDR Engineering, Inc.
9805 Double R Blvd.
Suite 101
Reno, NV 89521
Phone: 775-337-4700

City of Sparks

NORTH TRUCKEE DRAIN REALIGNMENT PHASE 3

MAIN STORM DRAIN STRUCTURE LIST 1

CITY OF SPARKS, NEVADA, PUBLIC WORKS DEPARTMENT

STATE OF NEVADA PROFESSIONAL ENGINEER GARY A. ANDERSON Exp. 12/31/2016 CIVIL No. 5522
5/11/16

SHEET No
S-23
SHT OF

C:\pwworking\phx\d0351221\S-23.dwg 04/29/16 11:01am POXBORRO

STATION LOCATIONS	DESCRIPTION	PRECAST CONCRETE ACCESS COVER	MANHOLE GRATE AND FRAME	CLASS AA CONCRETE, MODIFIED (MAJOR)	STRUCTURAL STEEL	REINFORCING STEEL (EPOXY COATED)	REINFORCING STEEL
		EACH	EACH	CU YD	LB	LB	LB
	INSTALL MANHOLES ON RISERS TO THE MAIN STORM DRAIN						
	AT THE FOLLOWING LOCATIONS:						
	(SEE SHEETS S-17 TO S-19 FOR DETAILS)						
	"NTD" STA. 21+94.00 LT AND RT		2				
	"NTD" STA. 30+22.30 LT AND RT		2				
	"NTD" STA. 36+00.00 LT AND RT		2				
	"NTD" STA. 41+48.50 LT AND RT		2				
	"NTD" STA. 46+70.50 LT AND RT		2				
	"NTD" STA. 51+74.50 LT AND RT		2				
	TOTAL	8	12		6200	1385	
	USE TOTAL	8	12		6200	1385	

Avoid cutting underground utility lines. It's costly.
Call before you Dig.
1-800-227-2600
UNDERGROUND SERVICE ALERT (USA)

SAFETY ALERT
Call before you Overhead
775-834-7590
NV Energy Construction Line
24hrs. Prior Notice Required
OVERHEAD SERVICE ALERT

REV No.	DATE	DESCRIPTION	APPROVED

DESIGNED BY: GAA
DRAWN BY: CLG
CHECKED BY:
APPROVED BY:
SCALE
HORIZ:
VERT:
FIELD BOOK

HDR
HDR Engineering, Inc.
9805 Double R Blvd.
Suite 101
Reno, NV 89521
Phone: 775-337-4700

City of Sparks

NORTH TRUCKEE DRAIN REALIGNMENT PHASE 3

MAIN STORM DRAIN STRUCTURE LIST 2

CITY OF SPARKS, NEVADA, PUBLIC WORKS DEPARTMENT

STATE OF NEVADA
GARY A. ANDERSON
Exp. 12/31/2016
CIVIL
PROFESSIONAL ENGINEER No. 5522
5/11/16

SHEET No
S-24
SHT OF

C:\pwworking\phx\d0351221\S-24.dwg 04/29/16 11:01am POXBORRO

GENERAL NOTES

1. All work requirements shown on these drawings and not otherwise detailed shall be accomplished as specified in North Truckee Drain Project Specifications and the American Railway Engineering and Maintenance-of-Way Association (AREMA) Manual for Railway Engineering. In the event of conflicts between specifications, the more restrictive shall apply.

2. All information shown on these drawings regarding location of the existing track, existing bridge and existing ground elevations are based on a site location survey performed by Bigby and Associates, dated October 8, 2009 and right-of-way information provided by the Railroad including drawings of the existing bridge span.

3. Contractor shall perform excavation as noted in the construction phasing notes for construction of the new structure and replace areas removed and disturbed in the course of construction to a condition equal to or better than existing.

4. The existing bridge is to remain in service during construction of the new culverts. Track and bridge spans shall be removed by UPRR forces per the construction sequence. Contractor to coordinate activities.

5. UPRR Stationing and Right-of-Way are based on Union Pacific Railroad Right of Way and Track Map, Main Line, Washoe County, Nevada, STA 39+82 to STA 252+37, dated September 24, 1992. Project Stationing is based on Main Box Stationing "NTD" and adding 200+00 to the "W" centerline and 300+00 to the "E" centerline.

6. Benchmark: CP #2015, BM-43, Elev. 4395.06, as shown on Sheet HC-1. UPRR STA 221+42.55 Lt 630.69.

7. Contact the Union Pacific "Call Before You Dig" number, 1-800-336-9193, 90 days (not less than 60 days) prior to proposed construction start date. Call Nevada "Call Before You Dig", 1-800-227-2600, and "Call Before You Overhead", 775-834-7590, prior to construction, confirm that all necessary relocations or protection of existing utilities have been completed before commencing work.

8. UPRR Right-of-Way lines based on Valuation Maps for the railroad do not match the Bigby Survey, Survey Right-of-Way lines. Both lines shown for informational purposes only.

DIVISION OF RESPONSIBILITY

A. RAILROAD

1. Remove ties, rail and OTM from existing bridge 246.27 (248.44) after completion of cast-in-place culvert at MP 246.27 (248.44), in accordance with Proposed Demolition and Railroad Phasing Notes, Sheet R-5.

2. Provide and install ballast, reinstall ties, rail and OTM in accordance with Proposed Construction Sequence Notes, Sheet R-4, at new culvert 246.27 (248.44).

3. Provide and install culvert marker signs at each end of each culvert crossing at MP 246.12 (248.29) and MP 246.27 (248.44).

B. CONTRACTOR

1. Coordinate all construction activities with the Railroad, including Railroad Flagging as required by the Project's Construction and Maintenance Agreement.

2. Before ordering any material, the Contractor shall make a detailed field inspection of the site verifying all pertinent dimensions and elevations. Any variations in dimensions or elevations from those shown on the drawings shall be reported immediately to the Project Engineer.

3. Any modifications to this design shall be approved by the Project Engineer and UPRR's Office of AVP Engineering Design/Construction prior to construction.

4. Verify the location, relocation, abandonment, and/or temporary support of all utilities affected by the construction of the structure and embankment and coordinate these activities with the appropriate utility companies, agencies and/or authorities.

5. Apply for and obtain all construction permits necessary to perform the work.

6. Furnish material noted in the Bill of Material and incidental material not shown.

7. Perform all work not performed by the Railroad.

8. Provide the Project Engineer and Railroad with a detailed construction plan including a dewatering plan and a culvert installation plan defining the activity, schedule and procedure for each aspect of the work. Construction shall not begin until the construction plan has been approved by the Railroad.

9. Provide all temporary structures (shoring, bracing and/or falsework) required to support and protect the existing embankments and structures affected by the work. Provide the Engineer and Railroad with details, design and procedure for all temporary structures. All temporary structures shall be designed, signed and sealed by a professional engineer registered in the State of Nevada. All temporary structures shall be approved by the Engineer and UPRR's Office of AVP Engineering Design/Construction prior to beginning construction.

10. Direct channel water flow as required to perform work at each location.

11. Accomplish all of the tasks described in the Proposed Construction Sequence shown on Sheet No. R-4 and Proposed Demolition and Railroad Restoration Phasing on Sheet No. R-5. An alternate construction sequence may be submitted to the Railroad for approval. The alternate construction sequence, if proposed, shall be approved by the Engineer and UPRR's Office of AVP Engineering Design/Construction prior to beginning construction.

12. Accomplish activities within the schedule specified in the approved construction plan.

CONSTRUCTION NOTES

DESIGN AND WORKMANSHIP

1. All work requirements shown on these drawings and not otherwise detailed shall be accomplished as specified in Project Specifications and the most current American Railway Engineering and Maintenance-of-Way Association (AREMA) Manual for Railway Engineering. In the event of conflicts between specifications, the more restrictive will apply.

2. All structures were designed in accordance with the AREMA Manual, Chapter 8 – Concrete Structures and Foundations for Cooper E-80 Loading.

3. The twin 6x6 RCB culvert extensions at MP 246.12 (248.29) were designed to standard UPRR loading criteria of 1'-6" to 18'-0" of cover.

4. The double 8x8 CIP concrete culvert at MP 246.27 (248.44) was designed to the following loading criteria:

   UPRR Sta. 225+75.75, 103'+/- LT to UPRR Sta. 225+75.75, 83'+/- LT, this transition from 25'-8" to 19'-6" overall width occurs primarily outside of the UPRR ROW and was based upon dead earth load only of approximately 2' to 10'.

   UPRR Sta. 225+75.75, 83'+/- LT to UPRR Sta. 225+75.75, 35'+/- LT, this standard UPRR double barrel section was designed to UPRR loading criteria of 1'-6" to 18'-0" of cover.

   UPRR Sta. 225+75.75, 35'+/- LT to UPRR Sta. 225+75.75, 30'+/- RT, this reduced wall thickness double box barrel section was designed to meet actual loads +/-4'-0" of cover.

   UPRR Sta. 225+75.75, 30'+/- RT to UPRR Sta. 225+75.75, 102'+/- RT, this standard UPRR double barrel section was designed to UPRR loading criteria of 1'-6" to 18'-0" of cover.

5. Contractor to design standard Class V manhole risers. Covers to be sealed and bolted at a minimum of 6" above ground. Design to be submitted to engineer for approval.

6. All work to conform to the UPRR Special Provisions as amended for this project.

GRADING

1. Provide and place all fill and subballast material per Geotech Recommendations. Perform grading as required to drain and match existing embankments or as shown in the Grading Plan, Sheets C-13 through C-16.

2. Contractor shall dewater proposed culvert locations in accordance with environmental permits prior to excavating and placement of bedding material and culvert backfill.

CAST-IN-PLACE CONCRETE

1. All concrete material, placement and workmanship shall be in accordance with Chapter 8 of the current edition of the AREMA Manual for Railway Engineering and Project Specifications.
2. Compressive strength – 4000 lb. per square inch at 28 days.
3. Exposed surfaces shall be formed in a manner that will produce a smooth and uniform appearance without rubbing or plastering. Exposed edges of 90 degrees or less are to be chamfered ¾" x ¾". Top surface to have a smooth finish, free of all float or trowel marks.
4. Concrete shall be proportioned such that the water – cement ratio (by weight) does not exceed 0.45. Concrete must contain a minimum of 6 sacks of cement per cubic yard of concrete.
5. Cement shall be either Type I or Type III Portland Cement.
6. Aggregates shall be graded in accordance with ASTM C33.
7. Coarse aggregate shall be size no. 67.
8. Fine aggregate shall be natural sand.
9. Air content shall be between 5% and 7% (by volume).
10. Admixtures shall not be used without approval by the Engineer and Railroad.
11. Curing shall be accomplished by wet curing or membrane curing compound. Membrane curing compound shall conform to ASTM C309 Type 2.
12. Apply Thorac Epoxy Adhesive 24LPL or approved alternate before placing new concrete against hardened concrete surfaces.
13. Existing concrete shall be roughened to ¼" amplitude prior to new concrete being poured against it.
14. All construction joints to be roughened surfaces.

CONSTRUCTION NOTES (CON'T.)

REINFORCING STEEL

1. Reinforcing steel shall be deformed, new billet bars per current ASTM A615 Specifications and meet Grade 60 requirements.
2. Fabrication of reinforcing steel shall be per Chapter 7 of the CRSI Manual of Standard Practice. Dimensions of bending details are out to out of bar.
3. Reinforcing steel is to be blocked to proper location and securely wired against displacement. Tie wires are to be installed at every other bar intersection so that at least fifty percent of the intersections are tied. Tack welding of reinforcing is prohibited. Minimum concrete cover on reinforcing not otherwise noted shall meet current AREMA Manual for Railway Engineering requirements.

CULVERT BEDDING

Culvert bedding shall be granular material such as aggregates ordinarily specified and used in the construction of highway base and subbase. These aggregates include crushed stone, natural or crushed gravel, natural or manufactured sands, crushed slag or a homogeneous mixture of these materials. This material is to be used under, around and over the box to the base of the slurry or ballast. Culvert bedding shall be compacted to 95% of maximum dry density as defined in ASTM International D1557 (Modified Proctor). Gradation shall be as follows:

SCREEN SIZE	% PASSING (BY WEIGHT)
1 inch	100
½ inch	60-90
⅜ inch	20-40
No. 4	10-20
No. 200	less than 5%

SLURRY CEMENT BACKFILL:

Slurry Cement Backfill is a self-compacting, cementitious fill material with an unconfined compressive strength of 50 to 300 psi. The mixture shall consist of water, Portland cement, fly ash, and sound or coarse aggregate or both. The mix design shall allow for adequate flowability without segregation of aggregates. Hardening time is about one hour. The maximum layer of thickness for Slurry Cement Backfill shall be three feet. Additional layers shall not be placed until the Slurry Cement Backfill has lost sufficient moisture to be walked on without indenting more than two inches.

DOWEL

⅝" Rebar dowel bars to have minimum drill depth of 7½" or as shown in the plans. Use ITW C6 adhesive anchoring system or equivalent.

UPRR CULVERTS DRAWING SCHEDULE

	SHEET NO.	DESCRIPTION
THIS SET	R-1	UPRR CULVERTS 246.12 (248.29) EXTENSION AND BRIDGE 246.27 (248.44) ROSEVILLE SUBDIVISION REPLACEMENT GENERAL NOTES, CONSTRUCTION NOTES AND DRAWING SCHEDULE
	R-2	UPRR CULVERTS 246.12 (248.29) EXTENSION WITH TWIN 6x6 RCB CULVERTS ROSEVILLE SUBDIVISION LAYOUT
	R-3	UPRR CULVERTS 246.12 (248.29) EXTENSION WITH TWIN 6x6 RCB CULVERTS ROSEVILLE SUBDIVISION FRAMING AND REINFORCING
	R-4	UPRR BRIDGE 246.27 (248.44) REPLACE W/ DOUBLE 8x8 CIP CONCRETE CULVERT ROSEVILLE SUBDIVISION LAYOUT
	R-5	UPRR BRIDGE 246.27 (248.44) REPLACE W/ DOUBLE 8x8 CIP CONCRETE CULVERT ROSEVILLE SUBDIVISION DEMOLITION
	R-6	UPRR BRIDGE 246.27 (248.44) REPLACE W/ DOUBLE 8x8 CIP CONCRETE CULVERT ROSEVILLE SUBDIVISION SECTION 1
	R-7	UPRR BRIDGE 246.27 (248.44) REPLACE W/ DOUBLE 8x8 CIP CONCRETE CULVERT ROSEVILLE SUBDIVISION SECTION 2
	R-8	UPRR BRIDGE 246.27 (248.44) REPLACE W/ DOUBLE 8x8 CIP CONCRETE CULVERT ROSEVILLE SUBDIVISION SECTION 3 FRAMING
	R-9	UPRR BRIDGE 246.27 (248.44) REPLACE W/ DOUBLE 8x8 CIP CONCRETE CULVERT ROSEVILLE SUBDIVISION SECTION 3 REINFORCING
	R-10	UPRR BRIDGE 246.27 (248.44) REPLACE W/ DOUBLE 8x8 CIP CONCRETE CULVERT ROSEVILLE SUBDIVISION SECTION 3 BENDING DIAGRAM UPRR CULVERT 246.17 (248.34) EXTENSION COLLAR DETAILS

POSTCONSTRUCTION COMPLIANCE

Contractor in charge of construction to provide to the City and UPRR as-built drawings confirming that the project was constructed in compliance with the plans and indicating any construction variances.

IN CHARGE OF CONSTRUCTION

DATE

Avoid cutting underground utility lines. It's costly.
Call before you Dig.
1-800-227-2600
UNDERGROUND SERVICE ALERT (USA)

SAFETY ALERT
Call before you Overhead
775-834-7590
NV Energy Construction Line
24hrs. Prior Notice Required
OVERHEAD SERVICE ALERT

REV No.	DATE	DESCRIPTION	APPROVED

DESIGNED BY: GNG
DRAWN BY: RGD
CHECKED BY: GNG
APPROVED BY: XXX
SCALE NO SCALE
HORIZ:
VERT:
FIELD BOOK

HDR Engineering, Inc.
9805 Double R Blvd.
Suite 101
Reno, NV 89521
Phone: 775-337-4700

City of Sparks

NORTH TRUCKEE DRAIN REALIGNMENT PHASE 3
UPRR CULVERTS 246.12 (248.29) EXTENSION AND BRIDGE 246.27 (248.44) REPLACEMENT
ROSEVILLE SUBDIVISION
GENERAL NOTES, CONSTRUCTION NOTES AND DRAWING SCHEDULE
CITY OF SPARKS, NEVADA, PUBLIC WORKS DEPARTMENT

STATE OF NEVADA
PAUL J. LAUGHLIN
Exp. 12/31/17
CIVIL
No. 10165
PROFESSIONAL ENGINEER
5/11/16

SHEET No
R-1
SHT OF
R-1.dgn

C:\Users\poxborro\Desktop\junk\ntd\cos-bdr.dwg 05/02/16 9:46am POXBORRO

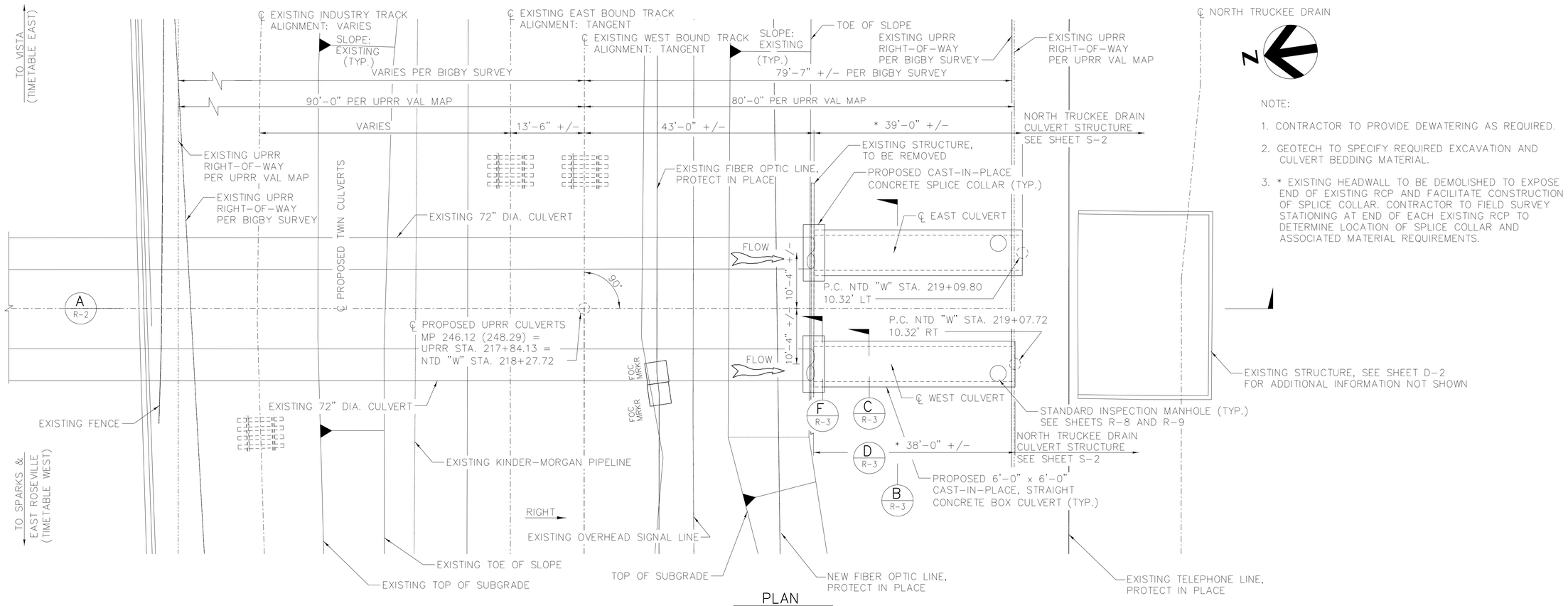

PLAN

SCALE: 1"=10'-0"

NOTE:

1. CONTRACTOR TO PROVIDE DEWATERING AS REQUIRED.
2. GEOTECH TO SPECIFY REQUIRED EXCAVATION AND CULVERT BEDDING MATERIAL.
3. * EXISTING HEADWALL TO BE DEMOLISHED TO EXPOSE END OF EXISTING RCP AND FACILITATE CONSTRUCTION OF SPLICE COLLAR. CONTRACTOR TO FIELD SURVEY STATIONING AT END OF EACH EXISTING RCP TO DETERMINE LOCATION OF SPLICE COLLAR AND ASSOCIATED MATERIAL REQUIREMENTS.

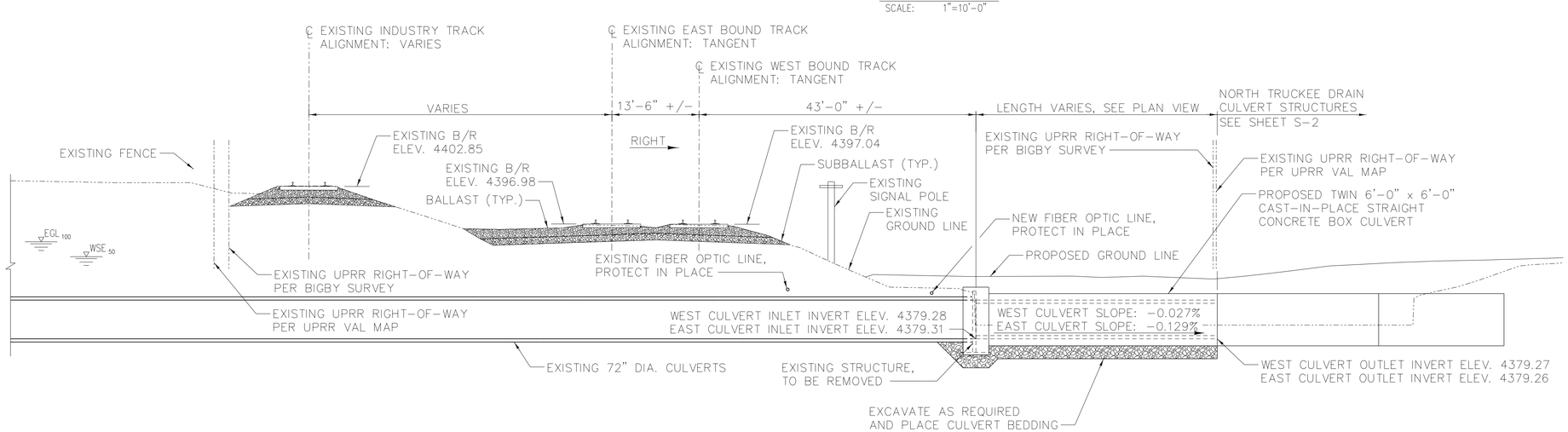

SECTION A R-2

SCALE: 1"=10'-0"

WSE_{50} = 4391.7
EGL_{100} = 4394.3
VEL_{100} = 7.3fps

Avoid cutting underground utility lines. It's costly.
Call before you Dig.
1-800-227-2600
UNDERGROUND SERVICE ALERT (USA)

SAFETY ALERT
Call before you Overhead
775-834-7590
NV Energy Construction Line
24hrs. Prior Notice Required
OVERHEAD SERVICE ALERT

REV No.	DATE	DESCRIPTION	APPROVED

DESIGNED BY: GNG
DRAWN BY: RGD
CHECKED BY: GNG
APPROVED BY: XXX
SCALE AS NOTED
HORIZ:
VERT:
FIELD BOOK

HDR
HDR Engineering, Inc.
9805 Double R Blvd.
Suite 101
Reno, NV 89521
Phone: 775-337-4700

City of Sparks

NORTH TRUCKEE DRAIN REALIGNMENT PHASE 3

UPRR CULVERTS 246.12 (248.29) EXTENSION WITH TWIN 6x6 RCB CULVERTS ROSEVILLE SUBDIVISION LAYOUT

CITY OF SPARKS, NEVADA, PUBLIC WORKS DEPARTMENT

STATE OF NEVADA PROFESSIONAL ENGINEER
MICHAEL LAUGHLIN
Exp. 12/31/17
CIVIL
No. 10165
5/11/16

SHEET No

R-2

SHT OF

R-2.dgn

C:\Users\poxborro\Desktop\junk\ntd\cos-bdr.dwg 05/02/16 9:46am POXBORRO

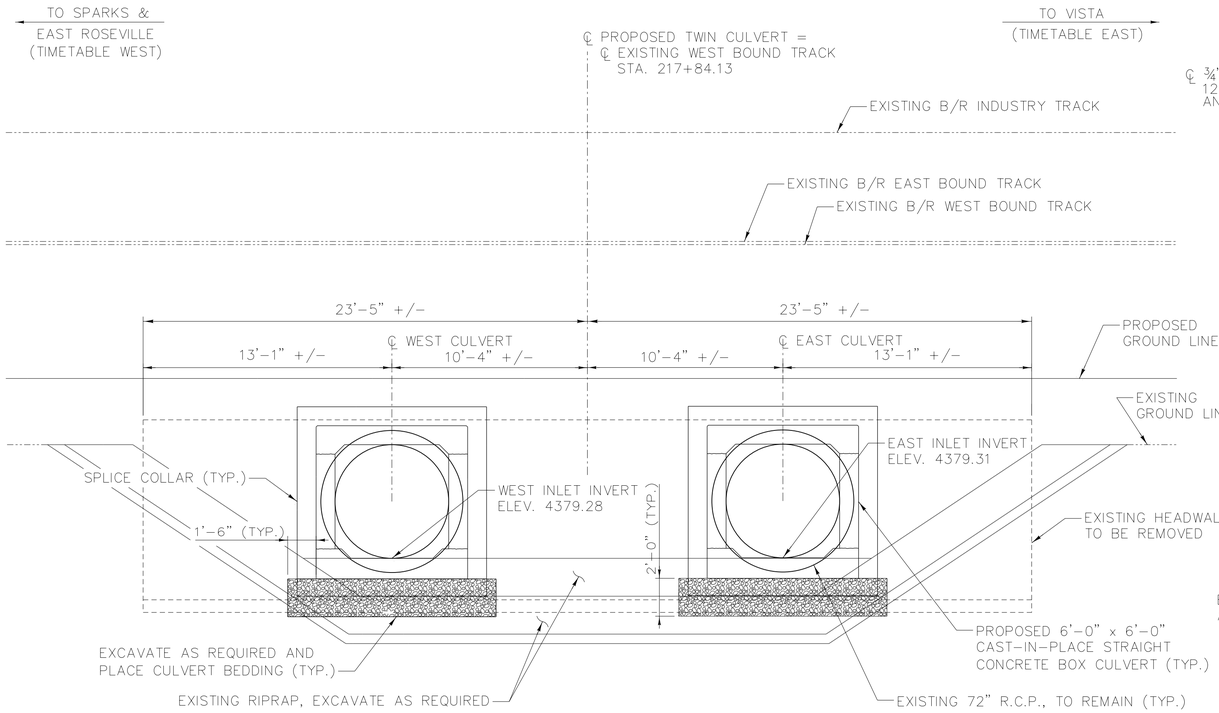

SECTION B
SCALE: 1/4"=1'-0" R-2

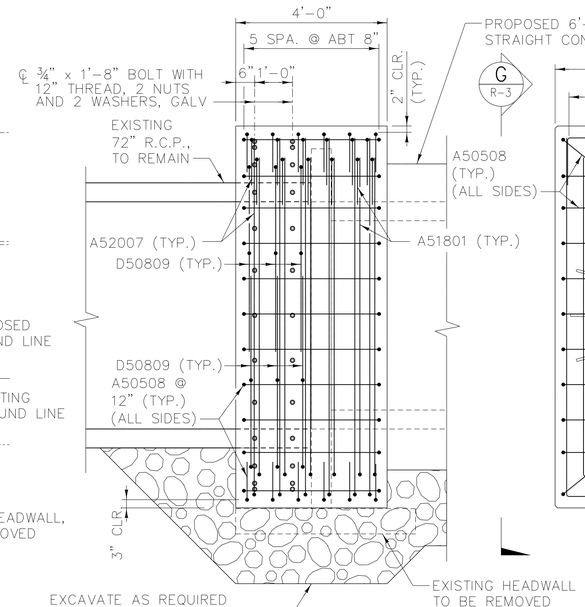

SPLICE COLLAR VIEW G R-3
SCALE: 1/2"=1'-0"
CULVERT REINFORCING NOT SHOWN FOR CLARITY

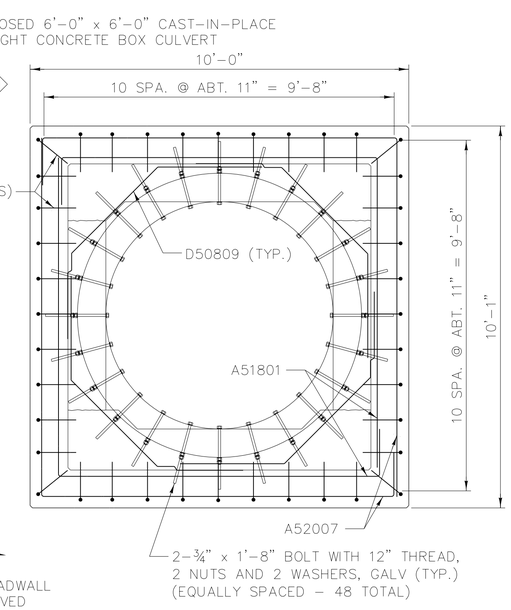

SPLICE COLLAR ELEVATION F R-2
SCALE: 1/2"=1'-0"
EXISTING HEADWALL NOT SHOWN FOR CLARITY

BENDING DIAGRAM
(DIMENSIONS ARE OUT TO OUT)

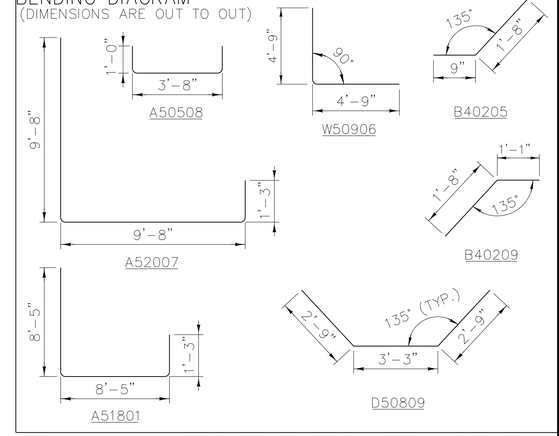

TOTAL EST. WT. OF WEST BARREL REINFORCING STEEL = 7263 LBS.
TOTAL EST. WT. OF EAST BARREL REINFORCING STEEL = 7422 LBS.
TOTAL EST. WT. OF SPLICE COLLARS REINFORCING STEEL = 1661 LBS.

ESTIMATED CONCRETE QUANTITIES		
TOTAL	UNIT	DESCRIPTION
41.5	CU.YD.	WEST BARREL
42.6	CU.YD.	EAST BARREL
13.9	CU.YD.	SPLICE COLLARS

NOTE:
USE A 1'-9" MIN. LAP SPLICE FOR #5 BARS WHEN NEEDED AND STAGGER ALL LAP SPLICES.

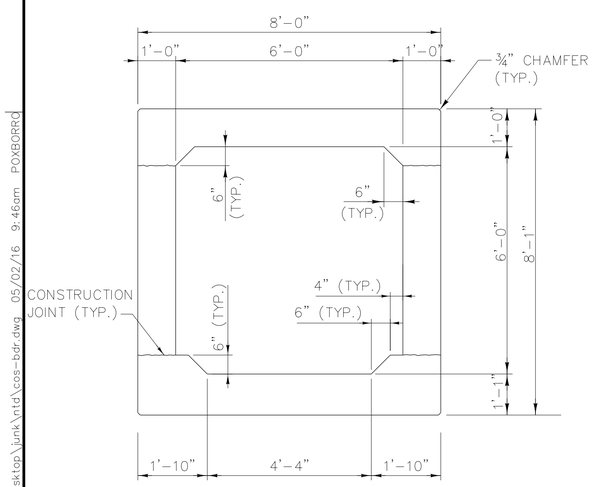

FRAMING SECTION C R-2
SCALE: 1/2"=1'-0"

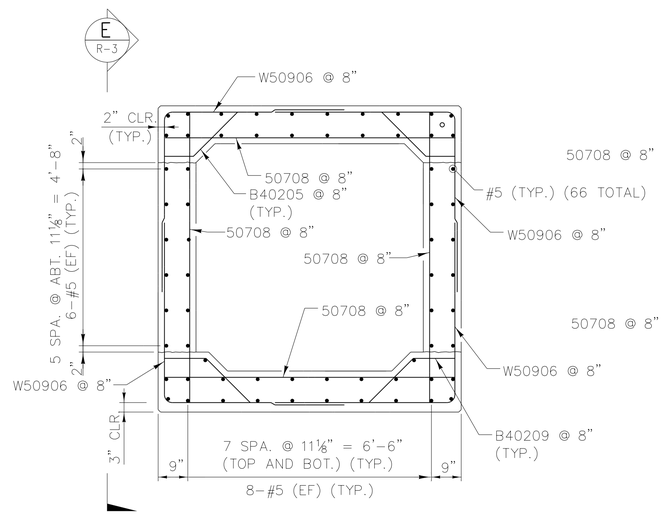

REINFORCING SECTION D R-2
SCALE: 1/2"=1'-0"
TYPICAL EACH CULVERT, ONLY ONE CULVERT SHOWN FOR CLARITY

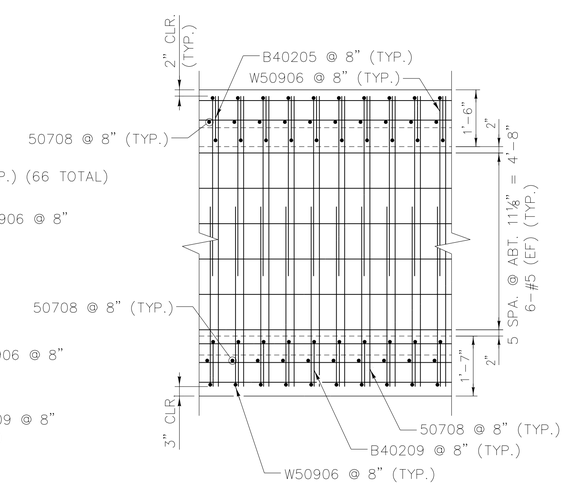

REINFORCING VIEW E R-3
SCALE: 1/2"=1'-0"

Avoid cutting underground utility lines. It's costly.
Call before you Dig.
1-800-227-2600
UNDERGROUND SERVICE ALERT (USA)

SAFETY ALERT
Call before you Overhead
775-834-7590
NV Energy Construction Line
24hrs. Prior Notice Required
OVERHEAD SERVICE ALERT

REV No.	DATE	DESCRIPTION	APPROVED

DESIGNED BY: GNG
DRAWN BY: RGD
CHECKED BY: GNG
APPROVED BY: XXX
SCALE: AS NOTED
HORIZ:
VERT:
FIELD BOOK

HDR
HDR Engineering, Inc.
9805 Double R Blvd.
Suite 101
Reno, NV 89521
Phone: 775-337-4700

City of Sparks

NORTH TRUCKEE DRAIN REALIGNMENT PHASE 3

UPRR CULVERTS 246.12 (248.29)
EXTENSION WITH TWIN 6x6 RCB CULVERTS
ROSEVILLE SUBDIVISION
FRAMING AND REINFORCING
CITY OF SPARKS, NEVADA, PUBLIC WORKS DEPARTMENT

STATE OF NEVADA
PROFESSIONAL ENGINEER
JOEL LAUGHLIN
Exp. 12/31/17
CIVIL
No. 10165
5/11/16

SHEET No
R-3
SHT OF
R-3.dgn

C:\Users\poxborro\Desktop\junk\ntd\cos-bdr.dwg 05/02/16 9:46am POXBORRO

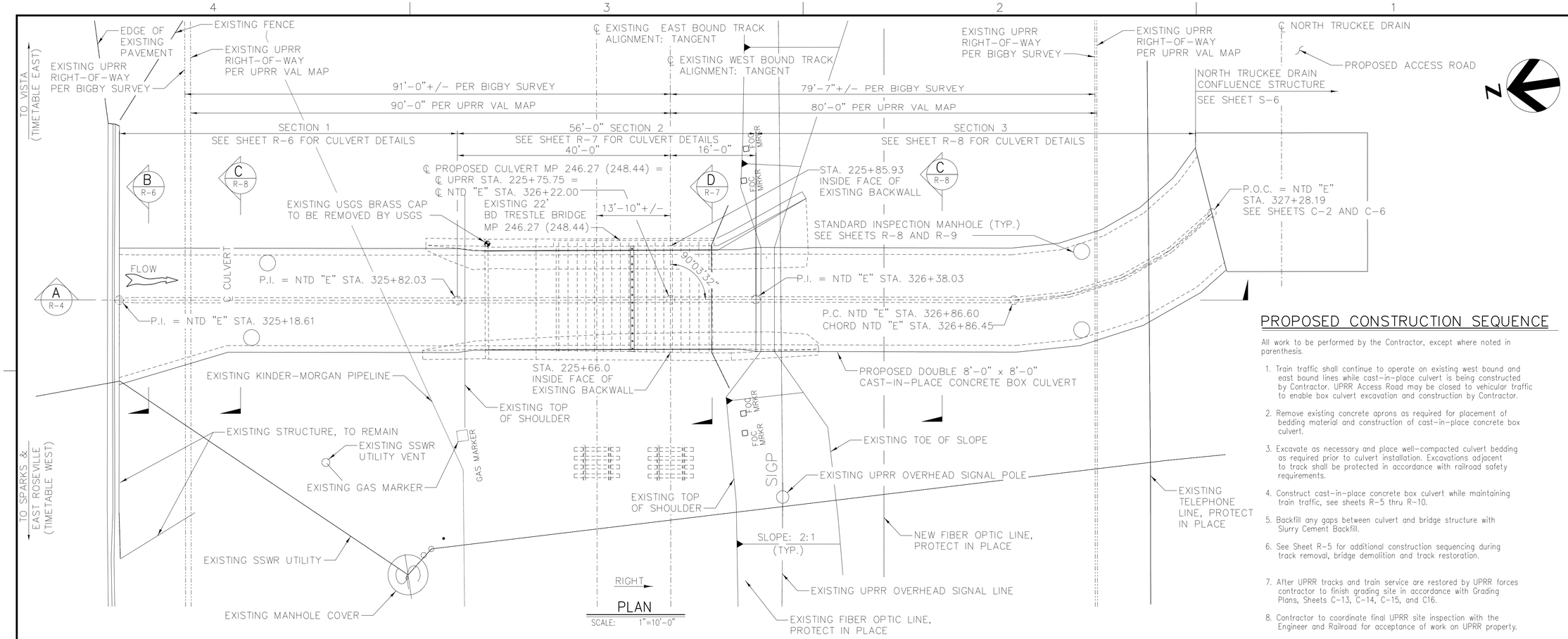

PLAN

SCALE: 1"=10'-0"

PROPOSED CONSTRUCTION SEQUENCE

All work to be performed by the Contractor, except where noted in parenthesis.

1. Train traffic shall continue to operate on existing west bound and east bound lines while cast-in-place culvert is being constructed by Contractor. UPRR Access Road may be closed to vehicular traffic to enable box culvert excavation and construction by Contractor.
2. Remove existing concrete aprons as required for placement of bedding material and construction of cast-in-place concrete box culvert.
3. Excavate as necessary and place well-compacted culvert bedding as required prior to culvert installation. Excavations adjacent to track shall be protected in accordance with railroad safety requirements.
4. Construct cast-in-place concrete box culvert while maintaining train traffic, see sheets R-5 thru R-10.
5. Backfill any gaps between culvert and bridge structure with Slurry Cement Backfill.
6. See Sheet R-5 for additional construction sequencing during track removal, bridge demolition and track restoration.
7. After UPRR tracks and train service are restored by UPRR forces contractor to finish grading site in accordance with Grading Plans, Sheets C-13, C-14, C-15, and C16.
8. Contractor to coordinate final UPRR site inspection with the Engineer and Railroad for acceptance of work on UPRR property.

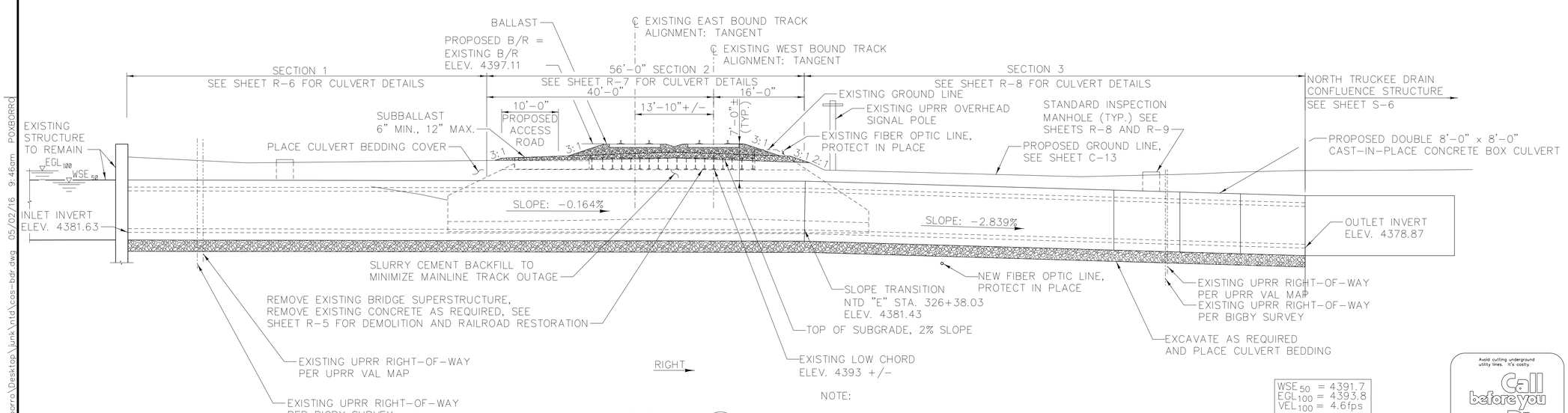

SECTION A R-4

SCALE: 1"=10'-0"

WSE_{50}	= 4391.7
EGL_{100}	= 4393.8
VEL_{100}	= 4.6fps

NOTE:

1. USGS TO REMOVE AND REPLACE BRASS SURVEY MARKER, CONTRACTOR TO COORDINATE WITH THEM.
2. CONTRACTOR TO PROVIDE DEWATERING AS REQUIRED.

Avoid cutting underground utility lines. It's costly.
Call before you Dig.
1-800-227-2600
UNDERGROUND SERVICE ALERT (USA)

SAFETY ALERT
Call before you Overhead
775-834-7590
NV Energy Construction Line 24hrs. Prior Notice Required
OVERHEAD SERVICE ALERT

REV No.	DATE	DESCRIPTION	APPROVED

DESIGNED BY: GNG
DRAWN BY: RGD
CHECKED BY: GNG
APPROVED BY: XXX
SCALE AS NOTED
HORIZ:
VERT:
FIELD BOOK

HDR Engineering, Inc.
9805 Double R Blvd.
Suite 101
Reno, NV 89521
Phone: 775-337-4700

City of Sparks

NORTH TRUCKEE DRAIN REALIGNMENT PHASE 3

UPRR BRIDGE 246.27 (248.44)
REPLACE W/ DOUBLE 8x8 CIP CONCRETE CULVERT
ROSEVILLE SUBDIVISION
LAYOUT

CITY OF SPARKS, NEVADA, PUBLIC WORKS DEPARTMENT

STATE OF NEVADA PROFESSIONAL ENGINEER NICHOLAS LAUGHLIN Exp. 12/31/17 CIVIL No. 10165 5/11/16

SHEET No

R-4

SHT OF

R-4.dgn

C:\Users\poxborro\Desktop\junk\ntd\cos-bdr.dwg 05/02/16 9:46am POXBORRO

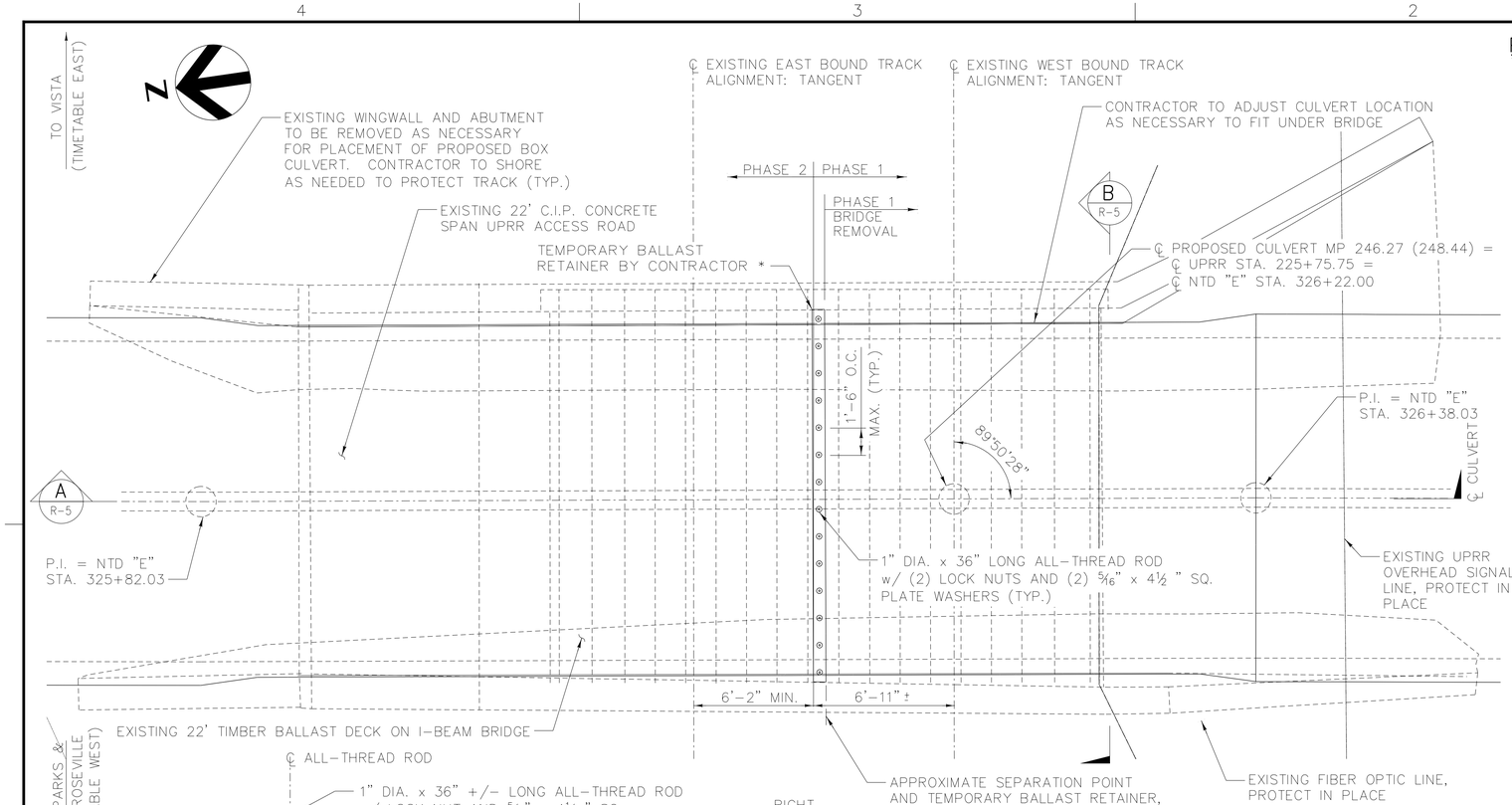

PLAN

SCALE: ¼"=1'-0"

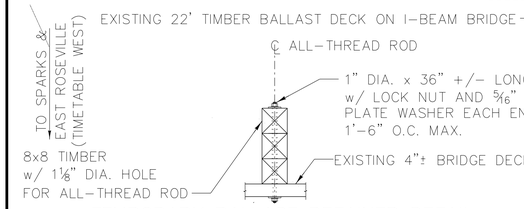

TEMPORARY BALLAST RETAINER DETAIL

SCALE: NONE

* TEMPORARY BALLAST RETAINER LOCATION PROCEDURE

1. Determine ' between inside rails of the East bound and West bound tracks.
2. Expose timber deck and drill to locate midpoint between beams underneath in proximity to ' between rails above.
3. Position ' of temporary ballast retainer not more that 10" from ' of nearest beam to the North side underneath while ensuring there is sufficient clearance to saw between the South edge of the temporary ballast retainer (" +4") and the flange of the nearest beam underneath on the South side.

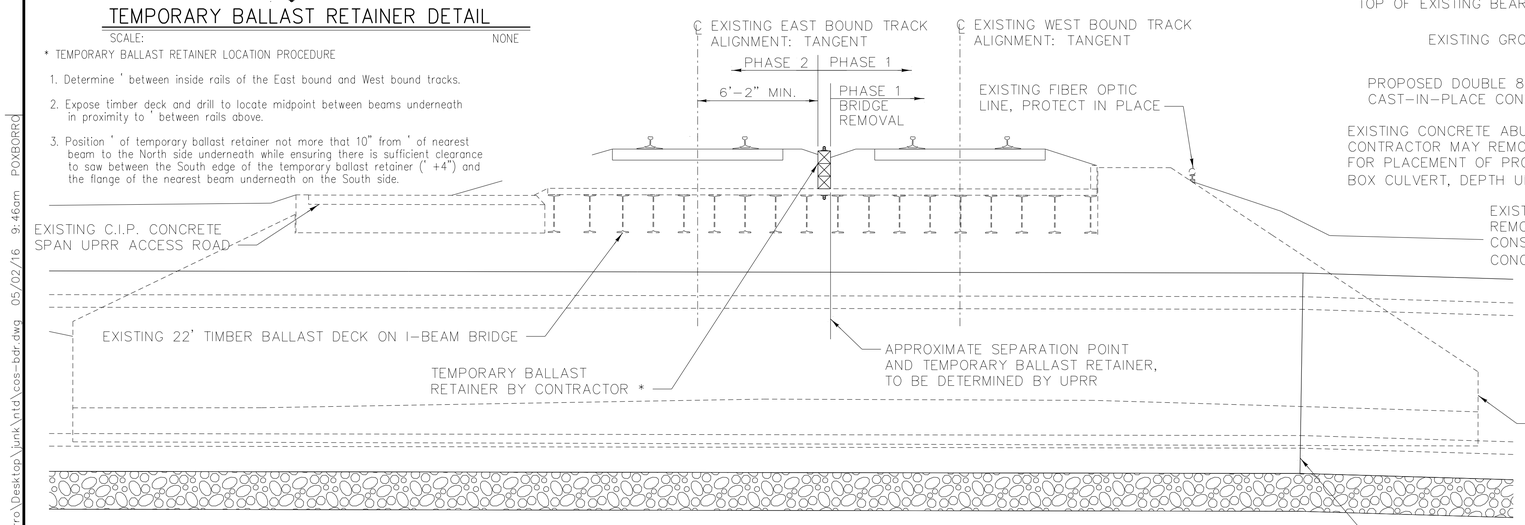

SECTION A

SCALE: ¼"=1'-0" (A / R-5)

PROPOSED DEMOLITION AND RAILROAD RESTORATION PHASING

Upon completion of box culvert construction at MP 246.27 (248.44) and backfilling as close as possible to the bottom of the existing bridge spans, Contractor shall coordinate with UPRR forces for the removal of tracks, bridge, completion of backfill, placement of subballast and restoration of tracks during train free periods.

General Notes:

West bound train traffic will be on the west bound track.

East bound train traffic will be on the east bound track.

Eight hour time windows will be made available for bridge removal and embankment construction for the track where work is occurring. The adjacent track will not be taken out of service and trains may operate on the track adjacent to the track where work is occurring.

Contractor is responsible for removal and disposal of old bridge material.

UPRR forces to temporarily relocate approximately 200' of overhead signal line.

UPRR Forces to supply 20 tons ballast for contractor to stockpile adjacent to bridge site.

Contractor to assist UPRR forces with lifting track panels.

UPRR forces to perform track work and surfacing.

Contractor has completed constructing sections of box culvert needed to support railroad embankment.

Construction Sequencing for Bridge Removal:

Phase 1

1) Contractor to install temporary ballast retainer on east bound bridge during a train free period. Trains may still operate on west bound track and bridge.
2) During a train free period on west bound track (trains may still operate on east bound track and bridge):
   a. UPRR forces to remove west bound track, ties, and OTM.
   b. Contractor to remove ballast and bridge span.
   c. Contractor to remove remaining portion of backwall to bridge bearings.
   d. Contractor to complete compacted backfill and place and compact subballast to grades shown.
   e. Contractor to place 6 inches of ballast from UPRR ballast stockpile on top of subballast.
   f. UPRR forces to surface and restore track to service.

Phase 2

1) During a train free period on east bound track (trains may still operate on west bound track and bridge):
   a. UPRR forces to remove east bound track, ties, and OTM.
   b. Contractor to remove ballast and bridge span.
   c. Contractor to remove remaining portion of backwall to bridge bearings.
   d. Contractor to complete compacted backfill and place and compact subballast to grades shown.
   e. Contractor to place 6 inches of ballast from UPRR ballast stockpile on top of subballast.
   f. UPRR forces to surface and restore track to service.

Phase 3

1) Contractor to remove concrete slab access road bridge working between trains.
2) Contractor place and compact backfill and a minimum of 6" subballast for road surface.
3) Contractor completes construction of remainder of box culvert and grading of site.

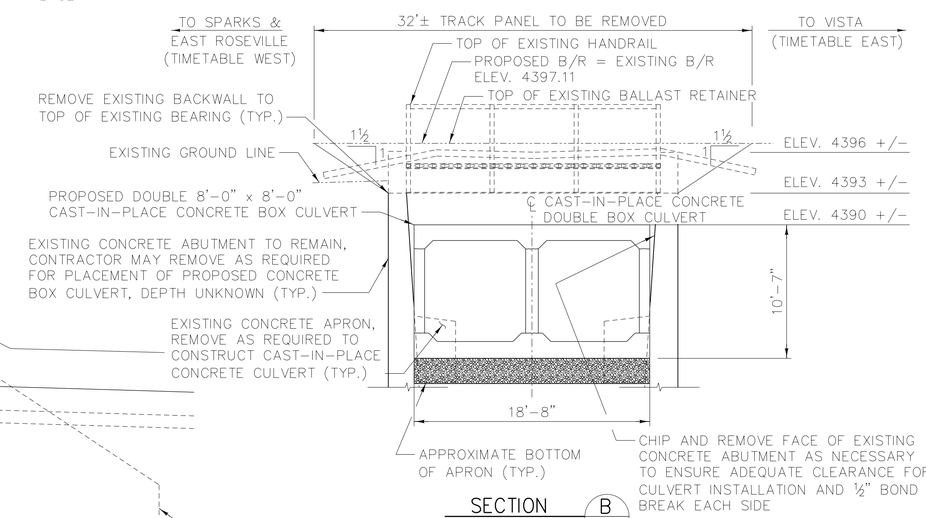

SECTION B

SCALE: NONE (B / R-5)

Avoid cutting underground utility lines. It's costly.
Call before you Dig.
1-800-227-2600
UNDERGROUND SERVICE ALERT (USA)

SAFETY ALERT
Call before you Overhead
775-834-7590
NV Energy Construction Line
24hrs. Prior Notice Required
OVERHEAD SERVICE ALERT

REV No.	DATE	DESCRIPTION	APPROVED

DESIGNED BY: GNG
DRAWN BY: RGD
CHECKED BY: GNG
APPROVED BY: XXX
SCALE: AS NOTED
HORIZ:
VERT:
FIELD BOOK

HDR
HDR Engineering, Inc.
9805 Double R Blvd.
Suite 101
Reno, NV 89521
Phone: 775-337-4700

City of Sparks

NORTH TRUCKEE DRAIN REALIGNMENT PHASE 3

UPRR BRIDGE 246.27 (248.44)
REPLACE W/ DOUBLE 8x8 CIP CONCRETE CULVERT
ROSEVILLE SUBDIVISION
DEMOLITION

CITY OF SPARKS, NEVADA, PUBLIC WORKS DEPARTMENT

STATE OF NEVADA PROFESSIONAL ENGINEER
JOSEPH P. LAUGHLIN
Exp. 12/31/17
CIVIL
No. 10165
5/11/16

SHEET No
R-5
SHT OF

R-5.dgn

C:\Users\poxborro\Desktop\junk\ntd\cos-bdr.dwg 05/02/16 9:46am POXBORRO

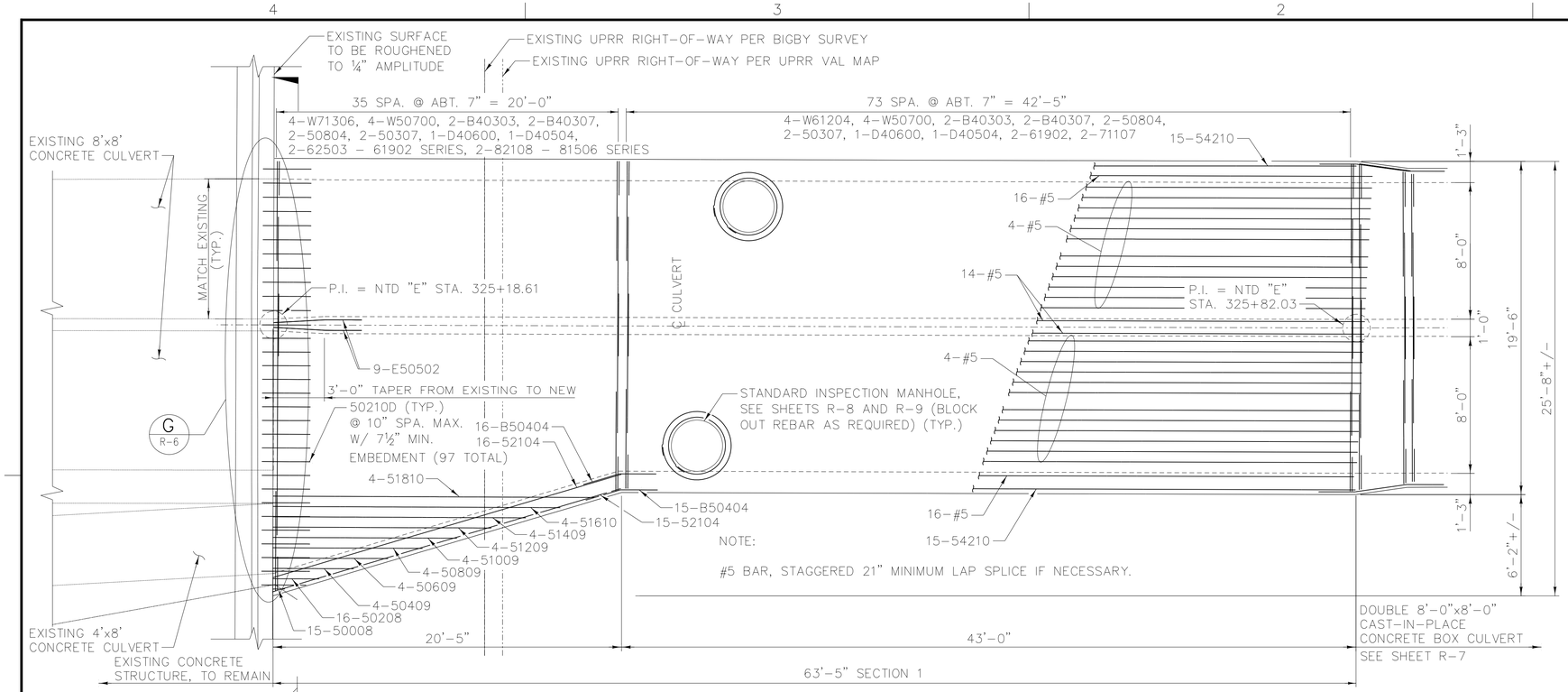

PLAN VIEW

SCALE: ¼"=1'-0"

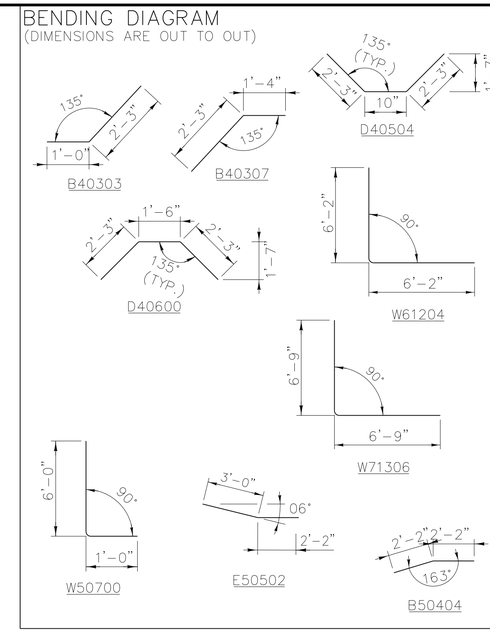

EST. WT. OF REINFORCING STEEL = 150,624 LBS.
NOT INCLUDING PRECAST STANDARD INSPECTION MANHOLES.

ESTIMATED CONCRETE QUANTITIES		
TOTAL	UNIT	DESCRIPTION
617.1	CU.YD.	TOTAL DOUBLE BARREL ONLY

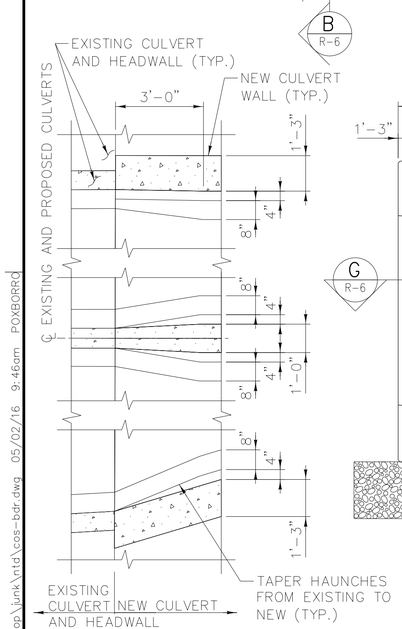

TRANSITION DETAIL

SCALE: ⅜"=1'-0"

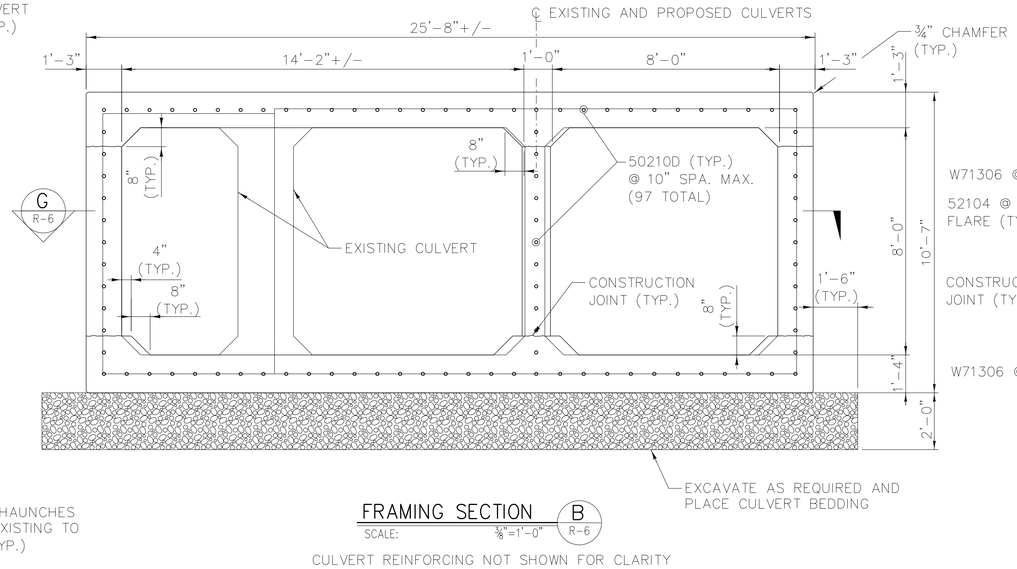

FRAMING SECTION B R-6

SCALE: ⅜"=1'-0"

CULVERT REINFORCING NOT SHOWN FOR CLARITY

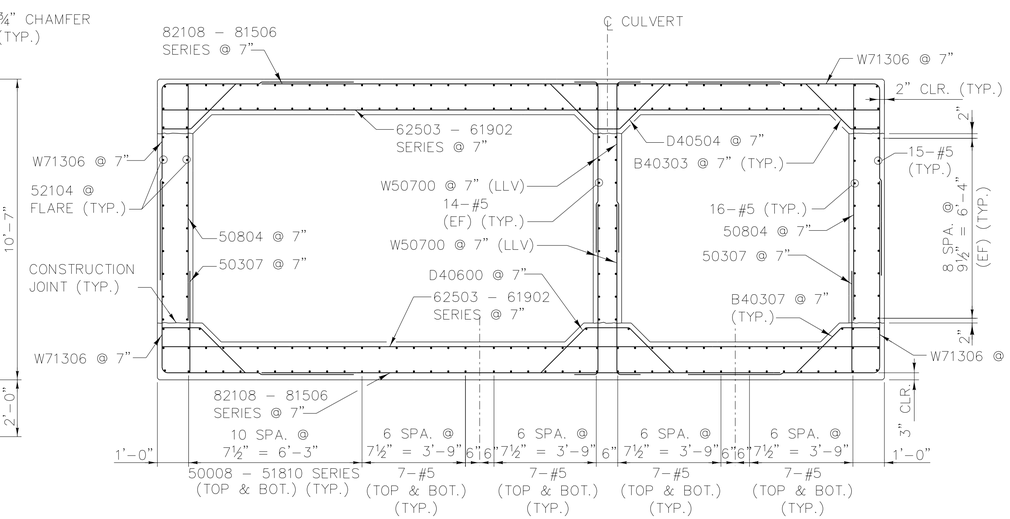

REINFORCING SECTION B R-6

SCALE: ⅜"=1'-0"

EXISTING CULVERT AND DOWELS NOT SHOWN FOR CLARITY

Avoid cutting underground utility lines. It's costly.
Call before you Dig.
1-800-227-2600
UNDERGROUND SERVICE ALERT (USA)

SAFETY ALERT
Call before you Overhead
775-834-7590
NV Energy Construction Line 24hrs. Prior Notice Required
OVERHEAD SERVICE ALERT

REV No.	DATE	DESCRIPTION	APPROVED

DESIGNED BY: GNG
DRAWN BY: RGD
CHECKED BY: GNG
APPROVED BY: XXX
SCALE: AS NOTED
HORIZ:
VERT:
FIELD BOOK

HDR Engineering, Inc.
9805 Double R Blvd.
Suite 101
Reno, NV 89521
Phone: 775-337-4700

City of Sparks

NORTH TRUCKEE DRAIN REALIGNMENT PHASE 3

UPRR BRIDGE 246.27 (248.44)
REPLACE W/ DOUBLE 8x8 CIP CONCRETE CULVERT
ROSEVILLE SUBDIVISION
SECTION 1

CITY OF SPARKS, NEVADA, PUBLIC WORKS DEPARTMENT

STATE OF NEVADA PROFESSIONAL ENGINEER NICOLE M. LAUGHLIN Exp. 12/31/17 CIVIL No. 10165 5/11/16

SHEET No
R-6

SHT OF

R-6.dgn

C:\Users\poxborro\Desktop\junk\ntd\cos-bdr.dwg 05/02/16 9:46am POXBORRO

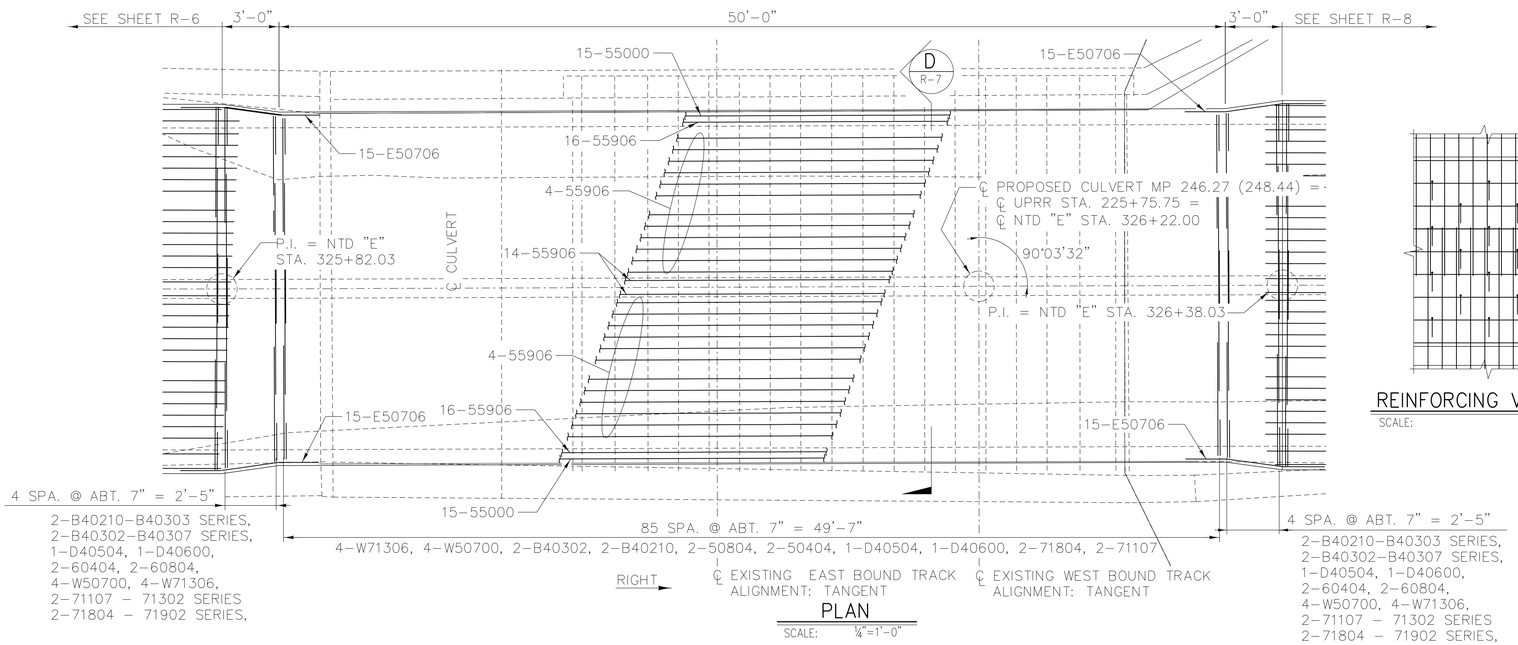

PLAN
SCALE: ¼"=1'-0"

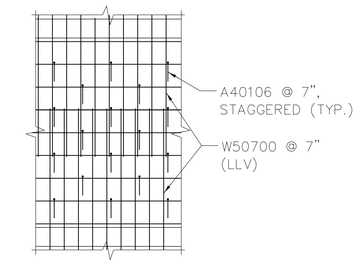

REINFORCING VIEW F R-7
SCALE: NONE

BENDING DIAGRAM
(DIMENSIONS ARE OUT TO OUT)

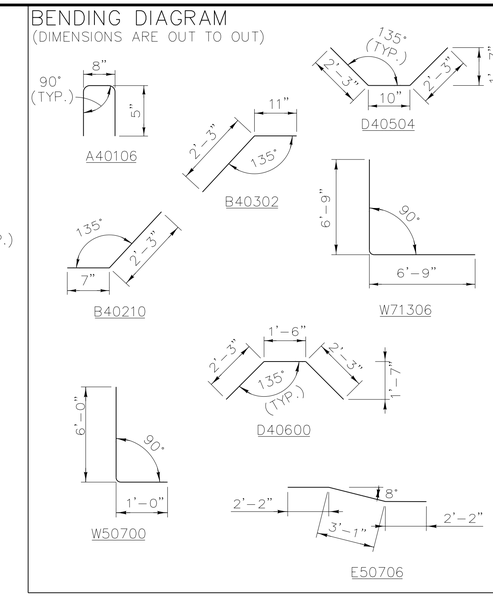

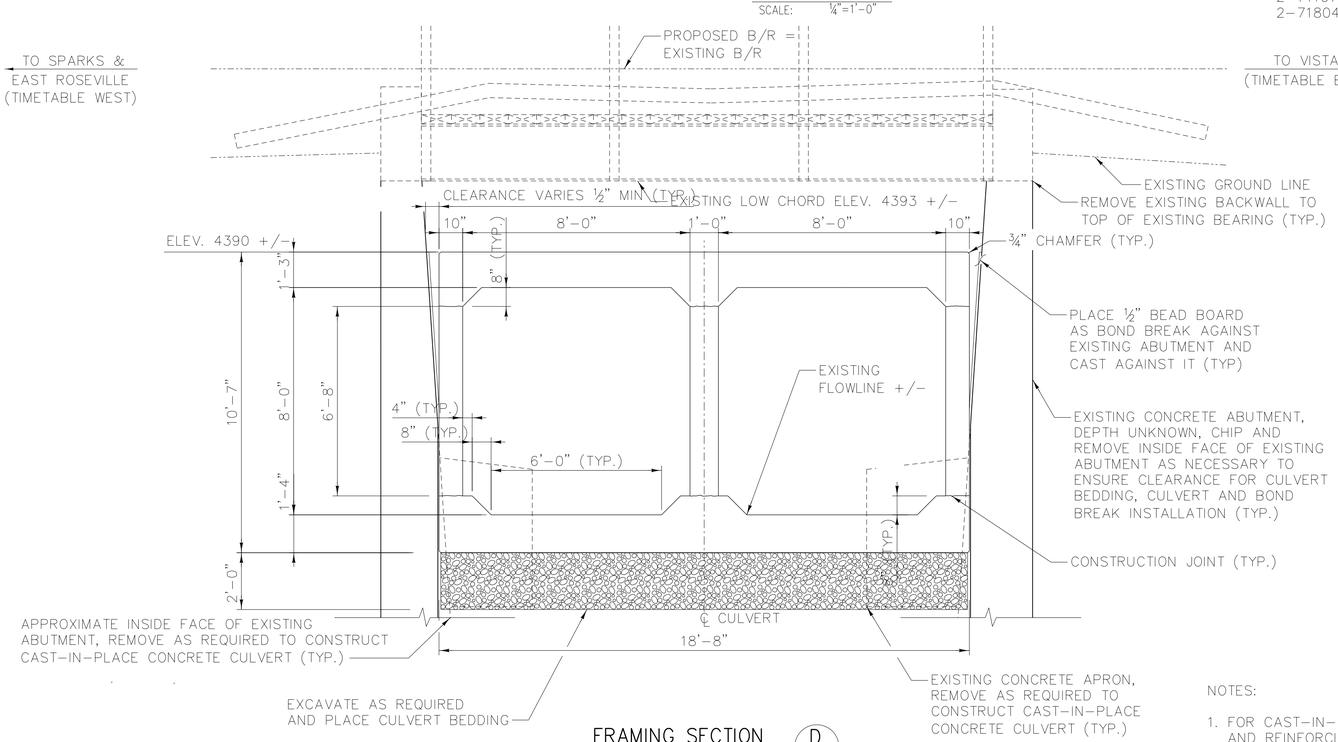

FRAMING SECTION D R-7
SCALE: ⅜"=1'-0"

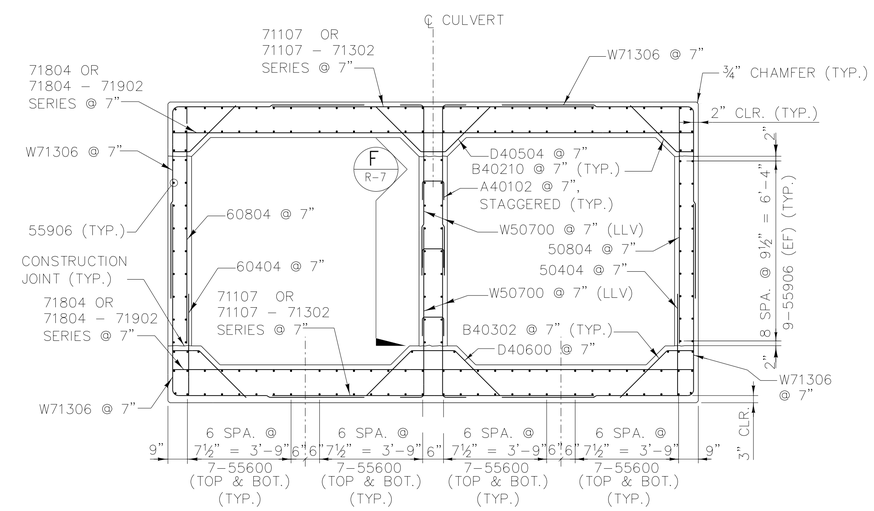

REINFORCING SECTION D R-7
SCALE: ⅜"=1'-0"

NOTES:

1. FOR CAST-IN-PLACE CONCRETE NOTES AND REINFORCING STEEL NOTES, SEE SHEET NO. R-1.

2. EF = EACH FACE
   FF = FAR FACE
   LLH = LONG LEG HORIZONTAL
   LLV = LONG LEG VERTICAL
   NF = NEAR FACE
   WP = WORKING POINT

Avoid cutting underground utility lines. It's costly.
Call before you Dig.
1-800-227-2600
UNDERGROUND SERVICE ALERT (USA)

SAFETY ALERT
Call before you Overhead
775-834-7590
NV Energy Construction Line
24hrs. Prior Notice Required
OVERHEAD SERVICE ALERT

REV No.	DATE	DESCRIPTION	APPROVED

DESIGNED BY: GNG
DRAWN BY: RGD
CHECKED BY: GNG
APPROVED BY: XXX
SCALE: AS NOTED
HORIZ:
VERT:
FIELD BOOK

HDR Engineering, Inc.
9805 Double R Blvd.
Suite 101
Reno, NV 89521
Phone: 775-337-4700

City of Sparks

NORTH TRUCKEE DRAIN REALIGNMENT PHASE 3

UPRR BRIDGE 246.27 (248.44)
REPLACE W/ DOUBLE 8x8 CIP CONCRETE CULVERT
ROSEVILLE SUBDIVISION
SECTION 2

CITY OF SPARKS, NEVADA, PUBLIC WORKS DEPARTMENT

STATE OF NEVADA
PROFESSIONAL ENGINEER
No. 10169
LAUGHLIN
Exp. 12/31/17
CIVIL
5/11/16

SHEET No
R-7
SHT OF

R-7.dgn

C:\Users\poxborro\Desktop\junk\ntd\cos-bdr.dwg 05/02/16 9:46am POXBORRO

NOTE:

1. STANDARD CLASS V INSPECTION MANHOLE WITH SEALED, LOCKING AND BOLTED COVER.
2. CONTRACTOR TO DESIGN AND SUBMIT FOR APPROVAL.
3. TOP OF INSPECTION MANHOLE TO BE APPROXIMATELY 6" ABOVE FINISHED GRADE.
4. BLOCK HAUNCH AS REQUIRED FOR INSPECTION MANHOLE ACCESS.
5. BLOCK OUT CULVERT REBAR AS REQUIRED FOR INSPECTION MANHOLE INSTALLATION.
6. DETAILS SIMILAR FOR MANHOLES AT UPRR CULVERTS 246.12 (248.29), SHEETS R-2 AND R-3.

FRAMING SECTION C R-8

SCALE: ⅜"=1'-0"

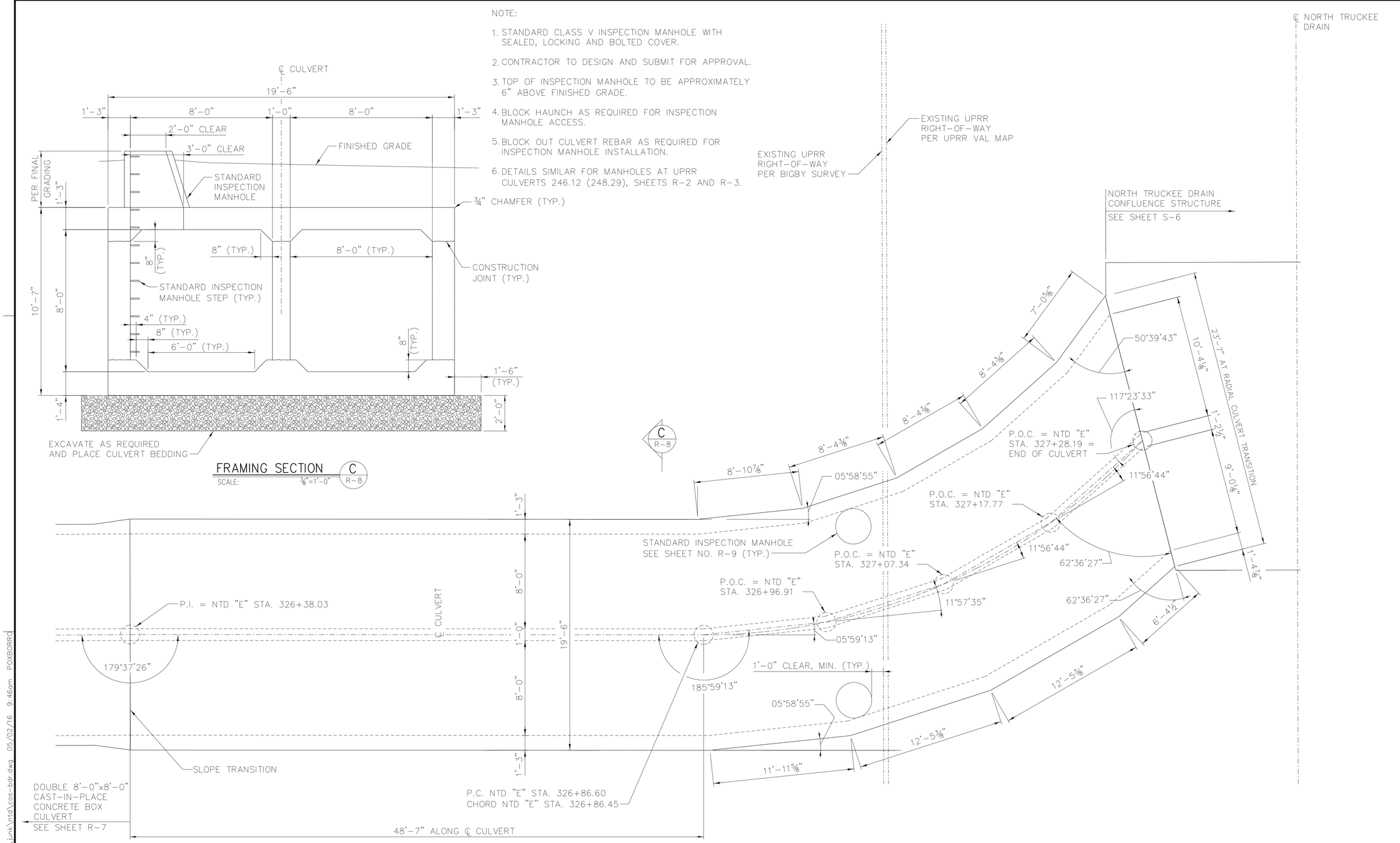

FRAMING PLAN

SCALE: ¼"=1'-0"

Avoid cutting underground utility lines. It's costly.
Call before you Dig.
1-800-227-2600
UNDERGROUND SERVICE ALERT (USA)

SAFETY ALERT
Call before you Overhead
775-834-7590
NV Energy Construction Line
24hrs. Prior Notice Required
OVERHEAD SERVICE ALERT

REV No.	DATE	DESCRIPTION	APPROVED

DESIGNED BY: GNG
DRAWN BY: RGD
CHECKED BY: GNG
APPROVED BY: XXX
SCALE AS NOTED
HORIZ:
VERT:
FIELD BOOK

HDR
HDR Engineering, Inc.
9805 Double R Blvd.
Suite 101
Reno, NV 89521
Phone: 775-337-4700

City of Sparks

NORTH TRUCKEE DRAIN REALIGNMENT PHASE 3

UPRR BRIDGE 246.27 (248.44)
REPLACE W/ DOUBLE 8x8 CIP CONCRETE CULVERT
ROSEVILLE SUBDIVISION
SECTION 3 FRAMING

CITY OF SPARKS, NEVADA, PUBLIC WORKS DEPARTMENT

STATE OF NEVADA
JEFFREY A. LAUGHLIN
Exp. 12/31/17
CIVIL
PROFESSIONAL ENGINEER
No. 10169
5/11/16

SHEET No
R-8
SHT OF
R-8.dgn

C:\Users\poxborro\Desktop\junk\ntd\cos-bdr.dwg 05/02/16 9:46am POXBORRO

REINFORCING SECTION C R-9

SCALE: ⅜"=1'-0"

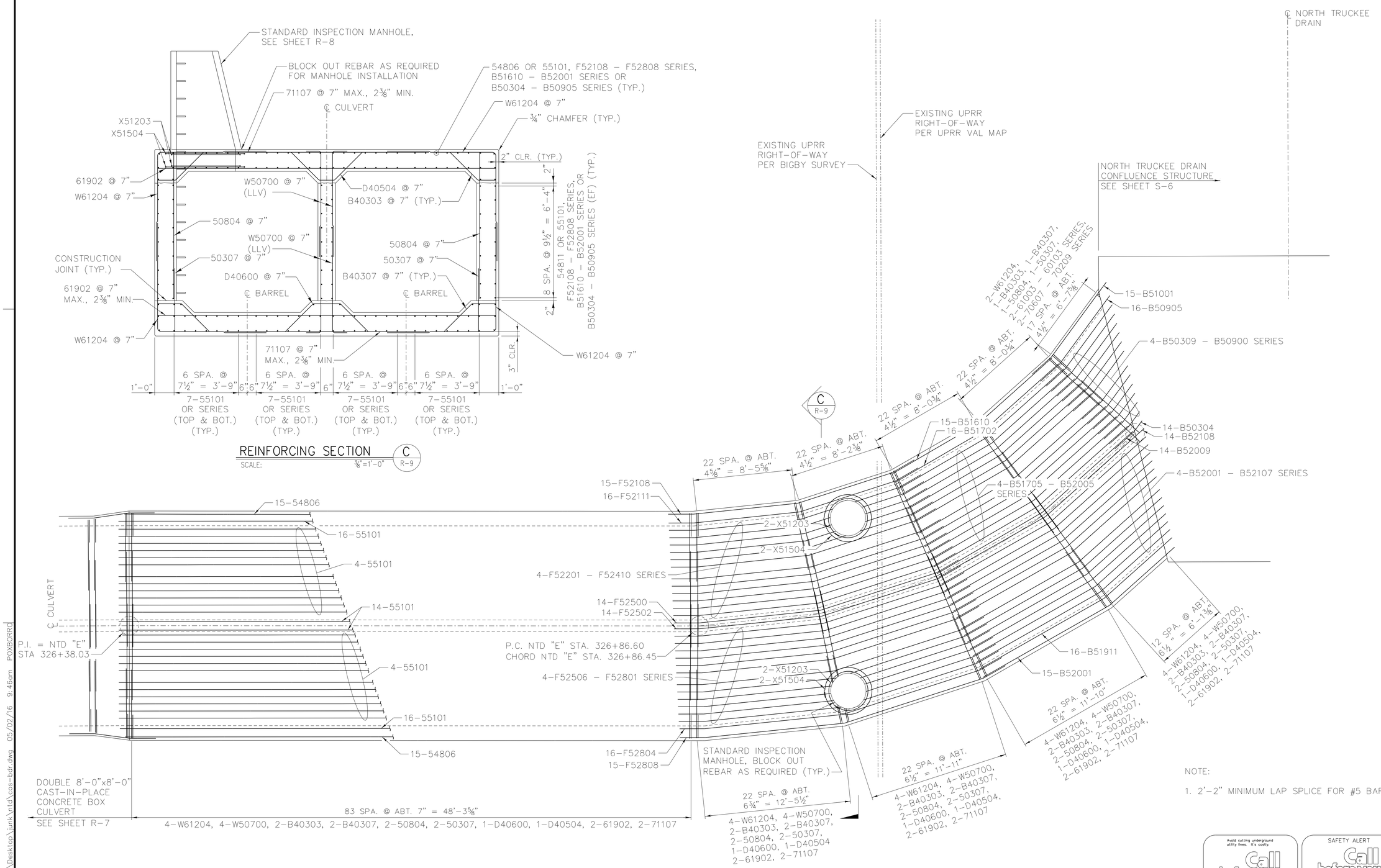

REINFORCING PLAN

SCALE: ¼"=1'-0"

NOTE:

1. 2'-2" MINIMUM LAP SPLICE FOR #5 BAR.

Avoid cutting underground utility lines. It's costly.
Call before you Dig.
1-800-227-2600
UNDERGROUND SERVICE ALERT (USA)

SAFETY ALERT
Call before you Overhead
775-834-7590
NV Energy Construction Line
24hrs. Prior Notice Required
OVERHEAD SERVICE ALERT

REV No.	DATE	DESCRIPTION	APPROVED

DESIGNED BY: GNG
DRAWN BY: RGD
CHECKED BY: GNG
APPROVED BY: XXX
SCALE: AS NOTED
HORIZ:
VERT:
FIELD BOOK

HDR
HDR Engineering, Inc.
9805 Double R Blvd.
Suite 101
Reno, NV 89521
Phone: 775-337-4700

City of Sparks

NORTH TRUCKEE DRAIN REALIGNMENT PHASE 3

UPRR BRIDGE 246.27 (248.44)
REPLACE W/ DOUBLE 8x8 CIP CONCRETE CULVERT
ROSEVILLE SUBDIVISION
SECTION 3 REINFORCING

CITY OF SPARKS, NEVADA, PUBLIC WORKS DEPARTMENT

REGISTERED PROFESSIONAL ENGINEER
STATE OF NEVADA
JOHN P. LAUGHLIN
Exp. 12/31/17
CIVIL
No. 10165
5/11/16

SHEET No
R-9

SHT OF

R-9.dgn

C:\Users\poxborro\Desktop\junk\ntd\cos-bdr.dwg 05/02/16 9:46am POXBORRO

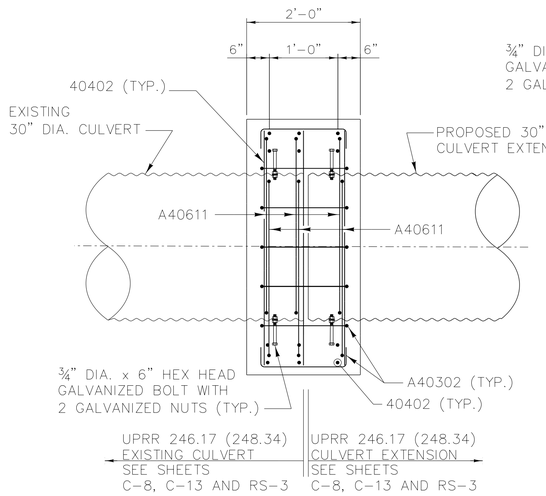

VIEW A R-10

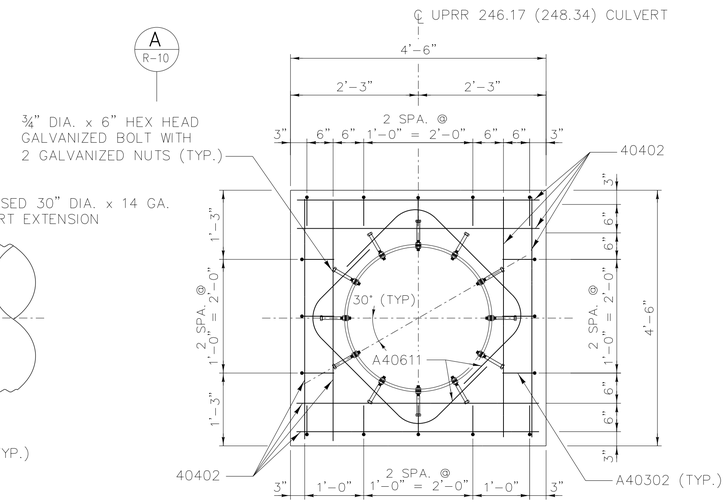

ELEVATION

UPRR CULVERT 246.17 (248.34)
CAST-IN-PLACE CONCRETE COLLAR FOR 30" CMP EXTENSION

SCALE: ¾"=1'-0"

246.17 (248.34) BENDING DIAGRAM

(DIMENSIONS ARE OUT TO OUT)

EST. WT. OF SPLICE COLLAR REINFORCING STEEL = 130 LBS

ESTIMATED CONCRETE QUANTITIES		
TOTAL	UNIT	DESCRIPTION
1.1	CU.YD.	SPLICE COLLAR

246.27 (248.44) BENDING DIAGRAM

(DIMENSIONS ARE OUT TO OUT)

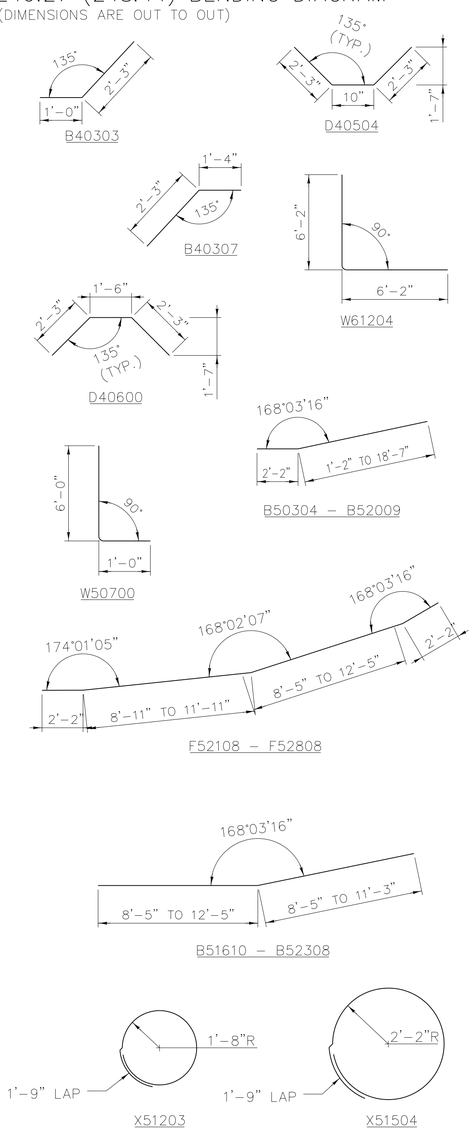

Avoid cutting underground utility lines. It's costly.
Call before you Dig.
1-800-227-2600
UNDERGROUND SERVICE ALERT (USA)

SAFETY ALERT
Call before you Overhead
775-834-7590
NV Energy Construction Line
24hrs. Prior Notice Required
OVERHEAD SERVICE ALERT

REV No.	DATE	DESCRIPTION	APPROVED

DESIGNED BY: GNG
DRAWN BY: RGD
CHECKED BY: GNG
APPROVED BY: XXX
SCALE AS NOTED
HORIZ:
VERT:
FIELD BOOK

HDR Engineering, Inc.
9805 Double R Blvd.
Suite 101
Reno, NV 89521
Phone: 775-337-4700

City of Sparks

NORTH TRUCKEE DRAIN REALIGNMENT PHASE 3
UPRR BRIDGE 246.27 (248.44)
REPLACE W/ DOUBLE 8x8 CIP CONCRETE CULVERT
ROSEVILLE SUBDIVISION
SECTION 3 BENDING DIAGRAM
UPRR CULVERT 246.17 (248.34) EXTENSION COLLAR DETAILS
CITY OF SPARKS, NEVADA, PUBLIC WORKS DEPARTMENT

STATE OF NEVADA
PROFESSIONAL ENGINEER
MICHAEL LAUGHLIN
Exp. 12/31/17
CIVIL
No. 10165
5/11/16

SHEET No
R-10
SHT OF
R-10.dgn

C:\Users\poxborro\Desktop\junk\ntd\cos-bdr.dwg 05/02/16 9:46am POXBORRO

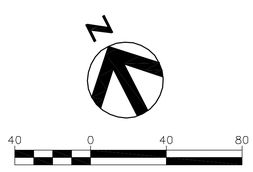

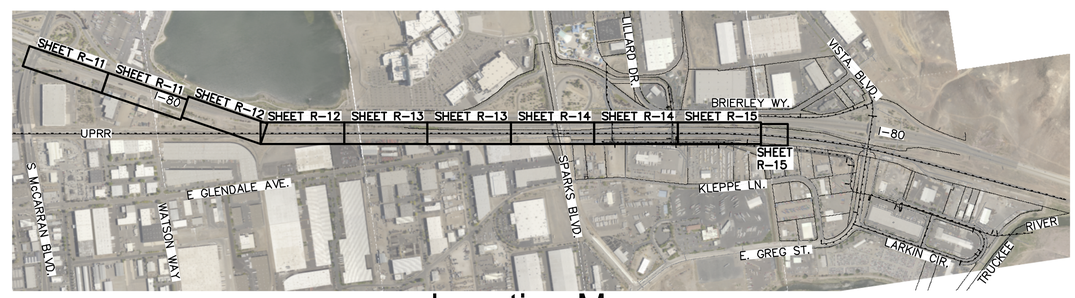

Location Map

NTS

DESIGNED BY: PEO
DRAWN BY: PEO
CHECKED BY: NL
APPROVED BY: NL
SCALE
HORIZ: 1"=40'
VERT: N/A
FIELD BOOK

REV No.	DATE	DESCRIPTION	APPROVED

HDR

HDR Engineering, Inc.
9805 Double R Blvd.
Suite 101
Reno, NV 89521
Phone: 775-337-4700

City of Sparks

NORTH TRUCKEE DRAIN REALIGNMENT PHASE 3

TEMPORARY UPRR CROSSING PLAN
ROSEVILLE SUBDIVISION

CITY OF SPARKS, NEVADA, PUBLIC WORKS DEPARTMENT

STATE OF NEVADA
PROFESSIONAL ENGINEER
No. 10169
LAUGHLIN
Exp. 12/31/17
CIVIL
5/11/16

SHEET No

R-11

SHT OF

C:\pwworking\phx\d0351221\R-11.dwg 05/02/16 8:47am POXBORRO

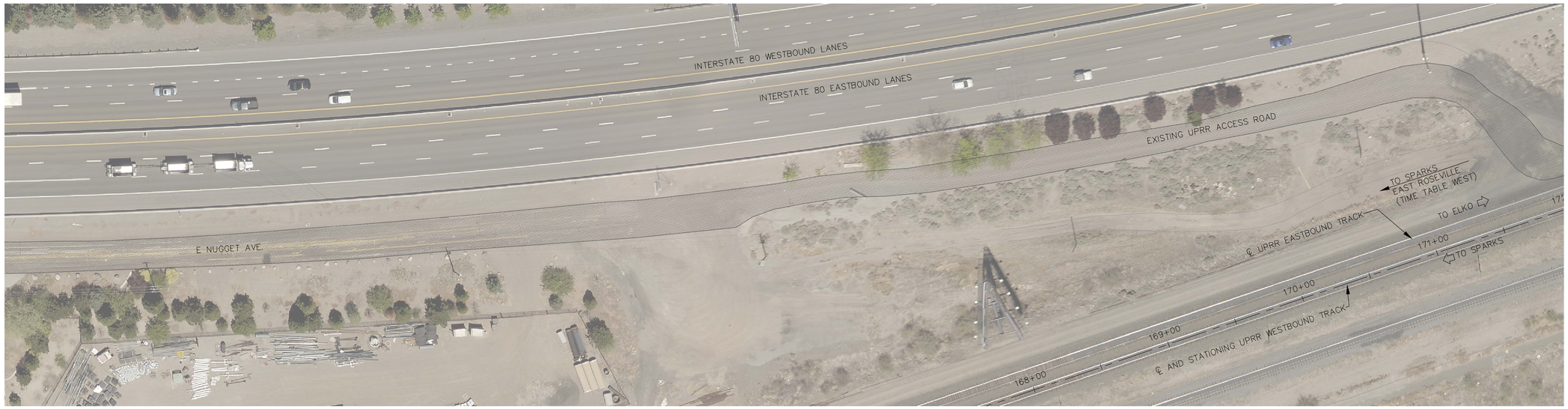

40 0 40 80

SCALE IN FEET

Location Map

NTS

REV No	DATE	DESCRIPTION	APPROVED

DESIGNED BY: PEO
DRAWN BY: PEO
CHECKED BY: NL
APPROVED BY: NL
SCALE
HORIZ: 1"=40'
VERT: N/A
FIELD BOOK

HDR
HDR Engineering, Inc.
9805 Double R Blvd.
Suite 101
Reno, NV 89521
Phone: 775-337-4700

City of Sparks

NORTH TRUCKEE DRAIN REALIGNMENT PHASE 3

TEMPORARY UPRR CROSSING PLAN
ROSEVILLE SUBDIVISION

CITY OF SPARKS, NEVADA, PUBLIC WORKS DEPARTMENT

STATE OF NEVADA
PAUL E. LAUGHLIN
Exp. 12/31/17
CIVIL
PROFESSIONAL ENGINEER
No. 10165
5/11/16

SHEET No
R-12

SHT OF

C:\pwworking\phx\d0351221\R-11.dwg 05/02/16 8:50am POXBORRO

N

40 0 40 80

SCALE IN FEET

Location Map

NTS

REV No.	DATE	DESCRIPTION	APPROVED

DESIGNED BY: PEO
DRAWN BY: PEO
CHECKED BY: NL
APPROVED BY: NL
SCALE
HORIZ: 1"=40'
VERT: N/A
FIELD BOOK

HDR

HDR Engineering, Inc.
9805 Double R Blvd.
Suite 101
Reno, NV 89521
Phone: 775-337-4700

City of Sparks

NORTH TRUCKEE DRAIN REALIGNMENT PHASE 3

TEMPORARY UPRR CROSSING PLAN
ROSEVILLE SUBDIVISION

CITY OF SPARKS, NEVADA, PUBLIC WORKS DEPARTMENT

STATE OF NEVADA
NICOLE LAUCHLIN
Exp. 12/31/17
CIVIL
PROFESSIONAL ENGINEER
No. 10165
5/11/16

SHEET No

R-13

SHT OF

C:\pwworking\phx\d0351221\R-11.dwg 05/02/16 8:52am POXBORRO

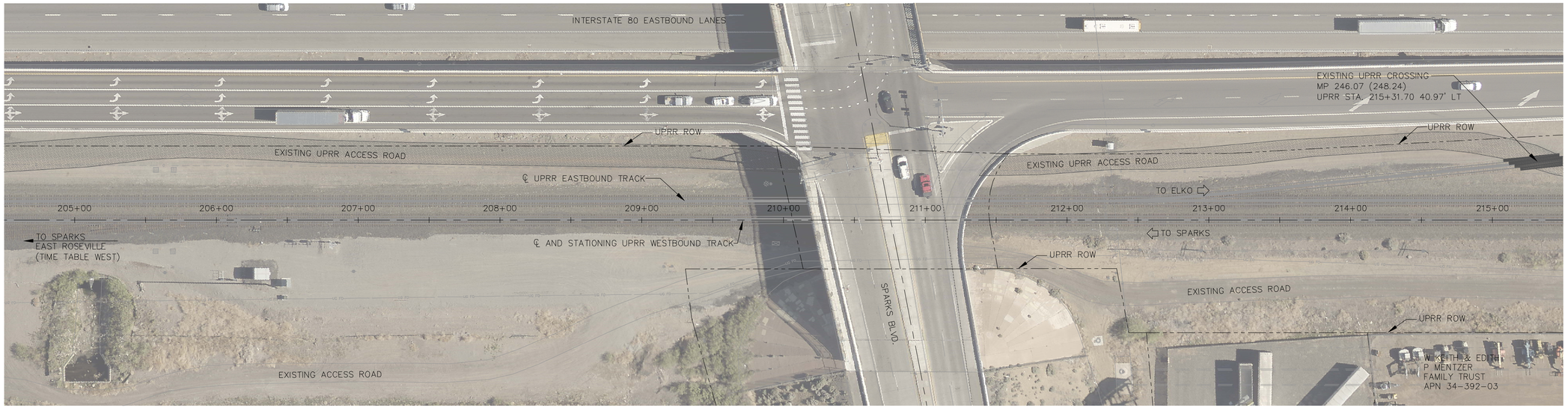

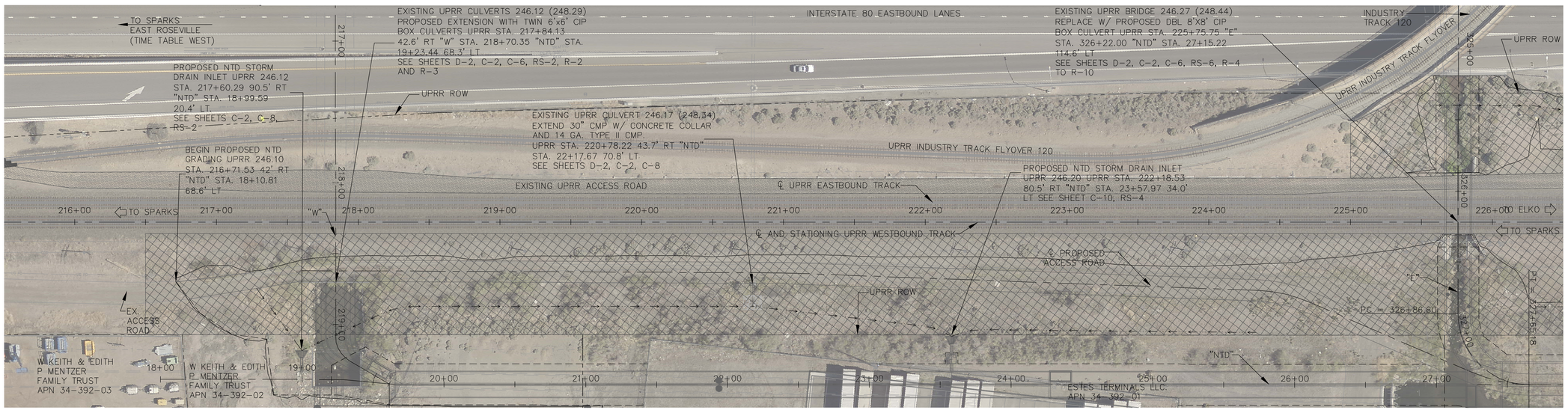

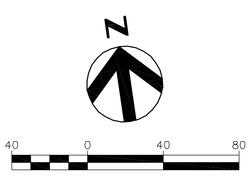

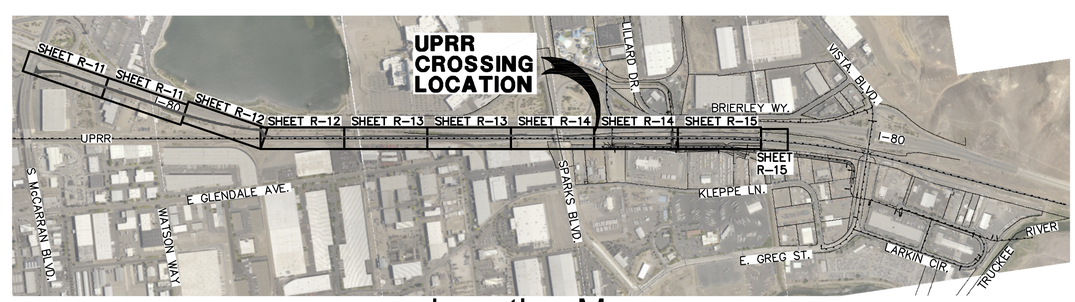

Location Map

NTS

REV No.	DATE	DESCRIPTION	APPROVED

DESIGNED BY: PEO
DRAWN BY: PEO
CHECKED BY: NL
APPROVED BY: NL
SCALE
HORIZ: 1"=40'
VERT: N/A
FIELD BOOK

HDR Engineering, Inc.
9805 Double R Blvd.
Suite 101
Reno, NV 89521
Phone: 775-337-4700

City of Sparks

NORTH TRUCKEE DRAIN REALIGNMENT PHASE 3

TEMPORARY UPRR CROSSING PLAN
ROSEVILLE SUBDIVISION
CITY OF SPARKS, NEVADA, PUBLIC WORKS DEPARTMENT

STATE OF NEVADA
NICOLE J. LAUGHLIN
Exp. 12/31/17
CIVIL
No. 10169
PROFESSIONAL ENGINEER
5/11/16

SHEET No
R-14

SHT OF

C:\pwworking\phx\d0351221\R-11.dwg 05/02/16 9:00am POXBORRO

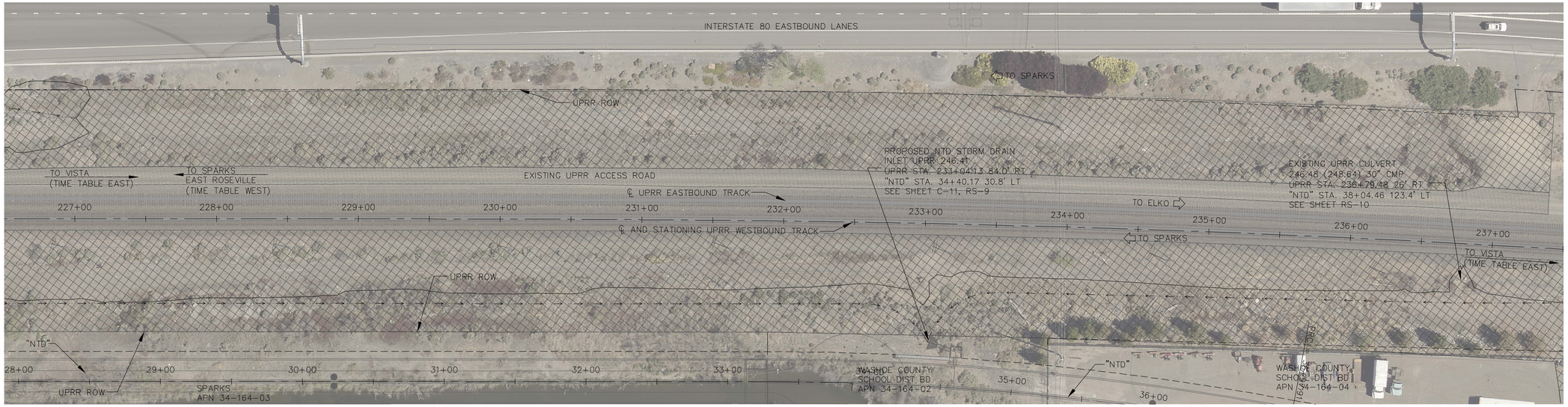

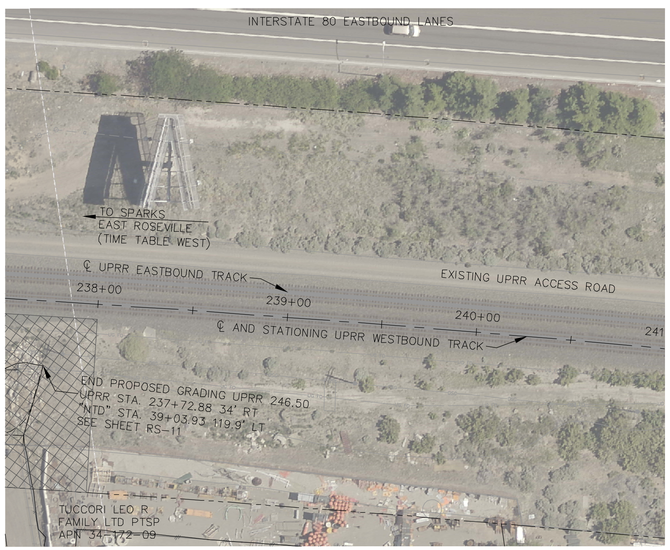

N

40 0 40 80

SCALE IN FEET

Location Map

NTS

REV No	DATE	DESCRIPTION	APPROVED

DESIGNED BY: PEO
DRAWN BY: PEO
CHECKED BY: NL
APPROVED BY: NL
SCALE
HORIZ: 1"=40'
VERT: N/A
FIELD BOOK

HDR Engineering, Inc.
9805 Double R Blvd.
Suite 101
Reno, NV 89521
Phone: 775-337-4700

City of Sparks

NORTH TRUCKEE DRAIN REALIGNMENT PHASE 3

TEMPORARY UPRR CROSSING PLAN
ROSEVILLE SUBDIVISION

CITY OF SPARKS, NEVADA, PUBLIC WORKS DEPARTMENT

STATE OF NEVADA
NICHOLAS LAUGHLIN
Exp. 12/31/17
CIVIL
No. 10165
PROFESSIONAL ENGINEER
5/11/16

SHEET No
R-15

SHT OF

C:\pwworking\phx\d0351221\R-11.dwg 05/02/16 9:02am POXBORRO

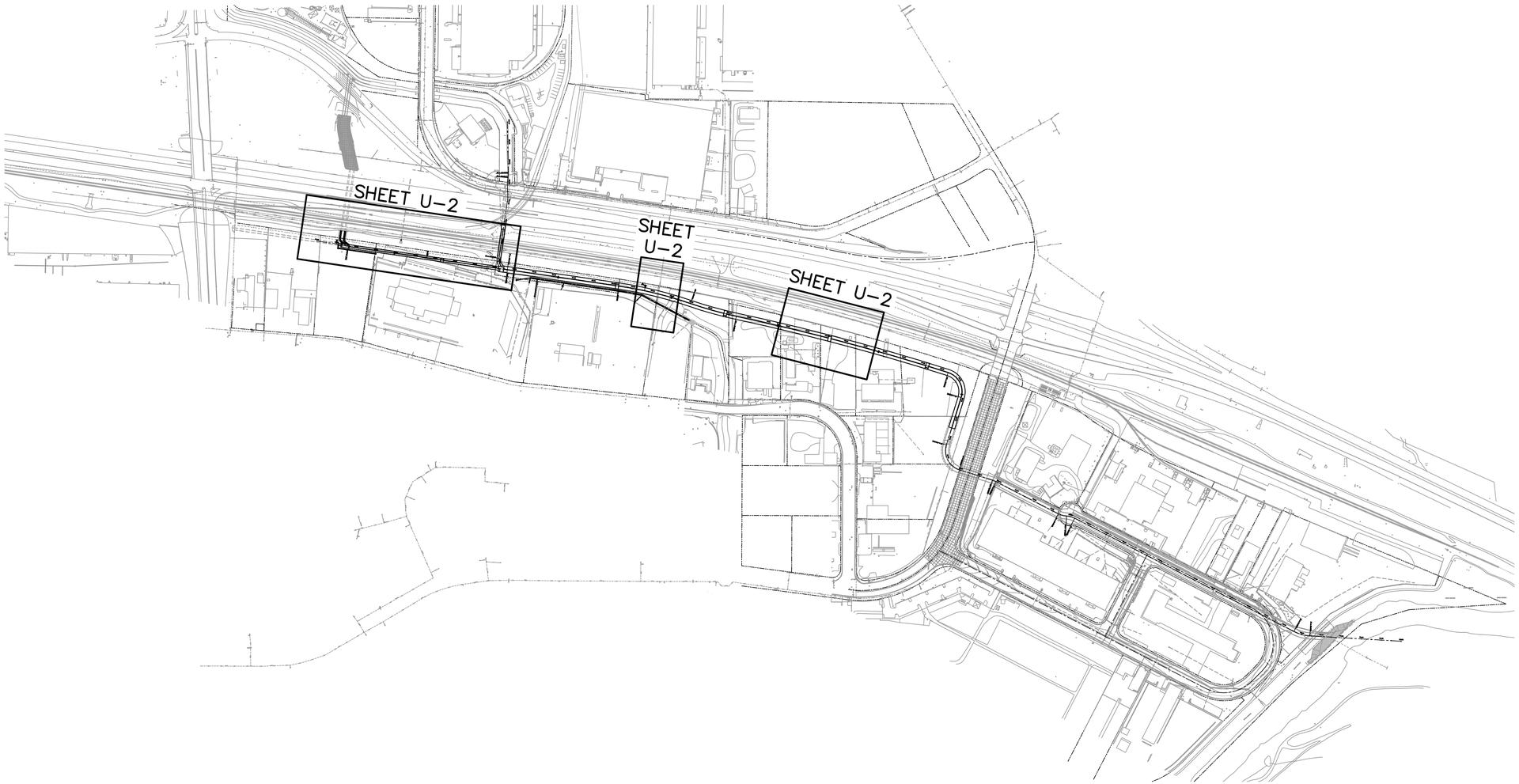

Key Map

NTS

DISCLAIMER NOTE

UTILITY LOCATIONS SHOWN HEREON ARE APPROXIMATE ONLY. IT SHALL BE THE CONTRACTOR'S RESPONSIBILITY TO DETERMINE THE EXACT HORIZONTAL AND VERTICAL LOCATION OF ALL EXISTING UNDERGROUND AND OVERHEAD UTILITIES PRIOR TO COMMENCING CONSTRUCTION. NO REPRESENTATION IS MADE THAT ALL EXISTING UTILITIES ARE SHOWN HEREON. THE ENGINEER ASSUMES NO RESPONSIBILITY FOR UTILITIES NOT SHOWN OR UTILITIES NOT SHOWN IN THEIR PROPER LOCATION.

Avoid cutting underground utility lines. It's costly.
Call before you Dig.
1-800-227-2600
UNDERGROUND SERVICE ALERT (USA)

SAFETY ALERT
Call before you Overhead
775-834-7590
NV Energy Construction Line
24hrs. Prior Notice Required
OVERHEAD SERVICE ALERT

REV No	DATE	DESCRIPTION	APPROVED

DESIGNED BY: PEO
DRAWN BY: PEO
CHECKED BY: NL
APPROVED BY: NL
SCALE
HORIZ: N/A
VERT: N/A
FIELD BOOK

HDR Engineering, Inc.
9805 Double R Blvd.
Suite 101
Reno, NV 89521
Phone: 775-337-4700

City of Sparks

NORTH TRUCKEE DRAIN REALIGNMENT PHASE 3

UTILITY KEY MAP

CITY OF SPARKS, NEVADA, PUBLIC WORKS DEPARTMENT

STATE OF NEVADA
PROFESSIONAL ENGINEER
LAUGHLIN
Exp. 12/31/17
CIVIL
No. 10165
5/11/16

SHEET No
U-1

SHT OF

C:\pwworking\phx\d0351221\U-01x.dwg 05/02/16 9:23am POXBORRO

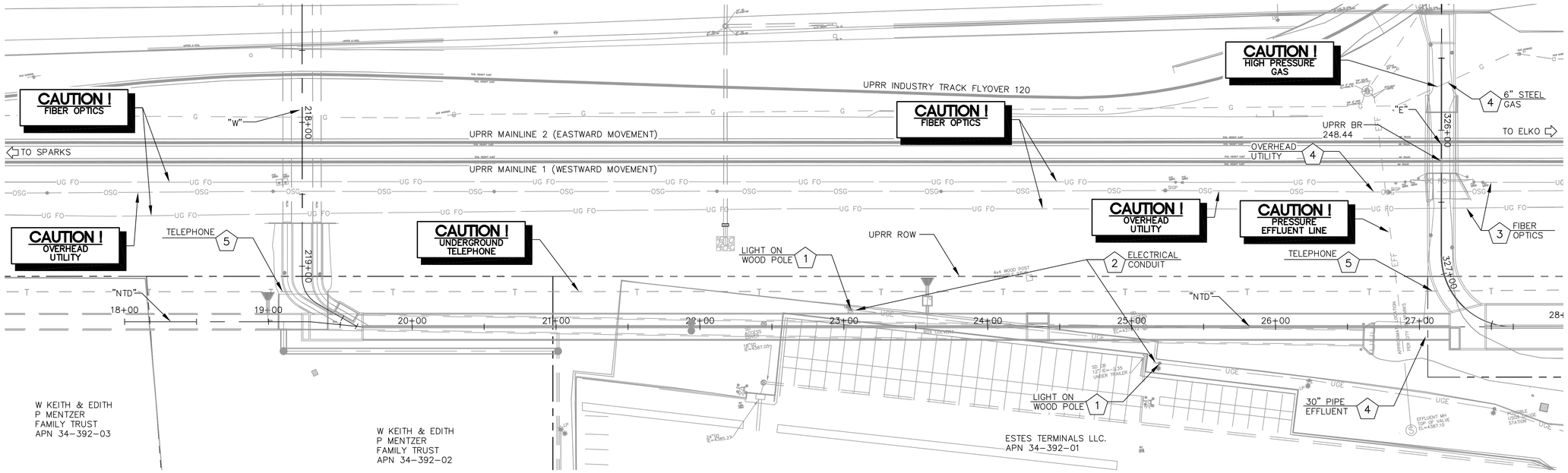

UTILITY NOTES :

1. REINSTALL LIGHT, TYPE AS SHOWN ON PLAN PER DETAILS SHEET DT-.
2. REPLACE ELECTRICAL CONDUIT AND LINE, SIZE AND TYPE TO BE DETERMINED BY CONTRACTOR.
3. FIBER OPTICS LINE TO BE RELOCATED BY OTHERS, SIZE AND TYPE AS SHOWN ON PLAN.
4. PROTECT AND MAINTAIN EXISTING UTILITY, SIZE AND TYPE AS SHOWN ON PLAN.
5. TELEPHONE LINE TO BE RELOCATED BY OTHERS.

THIS IS A GENERAL LIST. NOT ALL ACTIVITIES ARE USED.

NOTES:

1. **PROTECT EXISTING FEATURES IN PLACE UNLESS NOTED OTHERWISE.**
2. **SEE SHEETS C-2 TO C-4 FOR MAINLINE STORM DRAIN.**
3. **SEE SHEETS C-8 TO C-11 FOR PARALLEL AND LATERAL STORM DRAINS.**
4. **SEE SHEETS C-13 TO C-15 FOR PROPOSED SURFACE FEATURES, GRADING, AND DRAINAGE.**

N

40 0 40 80

SCALE IN FEET

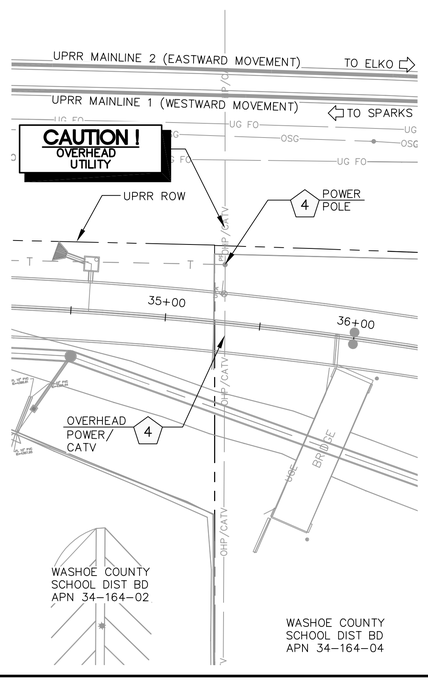

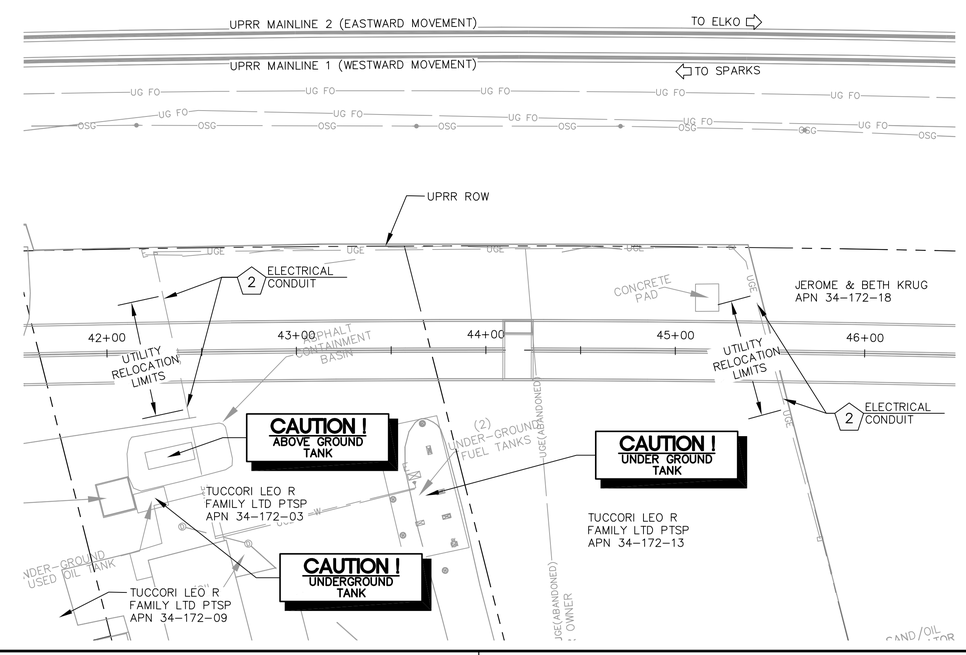

REV No.	DATE	DESCRIPTION	APPROVED

DESIGNED BY: PEO
DRAWN BY: PEO
CHECKED BY: NL
APPROVED BY: NL
SCALE
HORIZ: 1"=40'
VERT: N/A
FIELD BOOK

HDR Engineering, Inc.
9805 Double R Blvd.
Suite 101
Reno, NV 89521
Phone: 775-337-4700

City of Sparks

NORTH TRUCKEE DRAIN REALIGNMENT PHASE 3

UTILITY PLAN SHEET 1

CITY OF SPARKS, NEVADA, PUBLIC WORKS DEPARTMENT

STATE OF NEVADA PROFESSIONAL ENGINEER NIGEL LAUGHLIN Exp. 12/31/17 CIVIL No. 10165 5/11/16

SHEET No

U-2

SHT OF

C:\pwworking\phx\d0351221\U-01x.dwg 05/02/16 9:24am POXBORRO