SPARKS Fire Station #6

BID SET

JANUARY 4, 2024

PROJECT ADDRESS:

6963 SCHEIDBAR ROAD, SPARKS NEVADA 89436

CLIENT:

CITY OF SPARKS
COMMUNITY SERVICES

ENGINEERING DIVISION
Main: 775-353-4083

DESIGN TEAM

ARCHITECT

TSK ARCHITECTS
225 SOUTH ARLINGTON AVENUE
SUITE A, RENO, NV 89501
775.857.2403

CIVIL ENGINEER

(BY OWNER)

WOOD RODGERS
1361 CORPORATE BOULEVARD
RENO, NV 89502
775.823.4068

LANDSCAPE ARCHITECT

LAGE DESIGN
314 SOUTH WATER STREET
SUITE 120, HENDERSON, NV 89015
702.479.5225

STRUCTURAL ENGINEER

NELSON WILCOX STRUCTURAL ENGINEERS
225 SOUTH ARLINGTON AVENUE
SUITE B, RENO, NV 89501
775.848.3166

MECHANICAL ENGINEER

IMEG
4599 LONGLEY LANE
RENO, NV 89502
775.828.4889

PLUMBING ENGINEER

IMEG
4599 LONGLEY LANE
RENO, NV 89502
775.828.4889

ELECTRICAL ENGINEER

IMEG
4599 LONGLEY LANE
RENO, NV 89502
775.828.4889

FIRE PROTECTION

IMEG
4599 LONGLEY LANE
RENO, NV 89502
775.828.4889

COST ESTIMATING

OCMI
O'CONNOR CONSTRUCTION MANAGEMENT, INC.
2470 ST. ROSE PARKWAY
SUITE 209, HENDERSON, NV 89074
702.896.6926

tsk

225 South Arlington Avenue,
Suite A
Reno NV, 89501
phone: 775.857.2949
fax: 775.857.2403
www.tska.com

KOLBY M HARPSTEAD
REGISTERED
No. 8775
01/04/2024
ARCHITECT
STATE OF NEVADA

THESE DRAWINGS AND SPECIFICATIONS ARE THE PROPERTY OF TATE SNYDER KIMSEY ARCHITECTS AND MAY NOT BE REPRODUCED OR USED FOR ANY PURPOSE WITHOUT THE ARCHITECTS WRITTEN CONSENT. AS INSTRUMENTS OF SERVICE, THESE DOCUMENTS ARE NOT FINAL AND READY FOR USE, AND THEREFORE NOT VALID, UNLESS THEY ARE SEALED, SIGNED AND DATED.

Copyright, Ltd 2024

Consultant

PLEASE RECYCLE

Project
SPARKS Fire Station #6

6963 SCHEIDBAR ROAD, SPARKS NEVADA 89436

Job No: 22-043

Owner
CITY OF SPARKS

BID SET

JANUARY 4, 2024

CITY OF SPARKS APPROVAL

1/5/2024

JON R. ERICSON, P.E., PTOE
City Engineer

ABBREVIATIONS

A	
A.D.	Area Drain
A.V.	Audio/Visual
ACC.	Accessible
ACOUS.	Acoustical
ADJ.	Adjustible
AGGR.	Aggregate
AL.	Aluminum
APPROX.	Approximate
ARCH	Architectural
ASPH.	Asphalt
B	
B.O.F.	Bottom of Fixture
BD.	Board
BITUM.	Bituminous
BLDG.	Building
BLK.	Block
BLKG.	Blocking
BM.	Beam
BOT.	Bottom
C	
C.B.	Catch Basin
C.F.C.I.	Contractor Furnished Contractor Installed
C.F.O.I.	Contractor Furnished Owner Installed
C.G.	Corner Guard
C.I.	Cast Iron
C.J.	Control Joint
C.M.U.	Concrete Masonry Unit
CAB.	Cabinet
CEM.	Cement
CER.	Ceramic
CLG.	Ceiling
CLKG.	Caulking
CLO.	Closet
CLR.	Clear
CNTR.	Counter
COL.	Column
CONC.	Concrete
CONN.	Connection
CONST.	Construction
CONT.	Continuous
CORR.	Corridor
CPT.	Carpet
CT.	Ceramic Tile
CTR.	Center
CTSK.	Countersunk
D	
D.F.	Drinking Fountain
D.O.	Door Opening
D.S.P.	Dry Standpipe
DBL.	Double
DEPT.	Department
DET.	Detail
DIA.	Diameter
DIM.	Dimension
DISP.	Dispenser
DN.	Down
DR.	Door
DS.	Downspout
DWG.	Drawing
DWR.	Drawer
E	
(E)	Existing
E.	East
E.I.F.S.	Exterior Insulation Finish System
E.J.	Expansion Joint
E.P.	Electrical Panelboard
E.P.D.M.	Single Ply Roof Membrane
E.W.C.	Electric Water Cooler
EA.	Each
ELEC.	Electrical
ELEV.	Elevation
EMER.	Emergency
ENCL.	Enclosure
EQ.	Equal
EQUIP.	Equipment
EXIST.	Existing Exposed
EXP.	Expansion
EXT.	Exterior
F	
F.A.	Fire Alarm
F.B.	Flat Bar
F.D.	Floor Drain
F.E.	Fire Extinguisher
F.E.C.	Fire Extinguisher Cabinet
F.H.C.	Fire Hose Cabinet
F.O.C.	Face of Concrete
F.O.F.	Face of Finish
F.O.S.	Face of Stud
F.S.	Fulll Size
FDN.	Fountain
FIN.	Finish
FLASH.	Flashing
FLOUR.	Flourescent
FLR.	Floor
FPRF.	Fireproof
FT.	Foot or Feet
FTG.	Footing
FURR.	Furring
FUT.	Future
G	
G.B.	Grab Bar
G.F.R.C.	Glass Fiber Reinforced Concrete
GA.	Guage
GALV.	Galvanized
GL.	Glass
GND.	Ground
GR.	Grade
GYP.	Gypsum
H	
H.B.	Hose Bibb
H.M.	Hollow Metal
HDWD.	Hardwood
HDWE.	Hardware
HGT.	Height
HORIZ.	Horizontal
HR.	Hour
I	
I.D.	Inside Diameter (Dim.)
INSUL.	Insulation
INT.	Interior
J	
JAN.	Janitor
JT.	Joint
K	
KIT.	Kitchen
L	
LAB.	Laboratory
LAM.	Laminate
LAV.	Lavatory
LKR.	Locker
LT.	Light
M	
M.C.	Medicine Cabinet
M.O.	Masonry Opening
MAX.	Maximum
MECH.	Mechanical
MEMB.	Membrane
MFGR.	Manufacturer
MH.	Manhole
MIN.	Minimum
MIR.	Mirror
MISC.	Miscellaneous
MTD.	Mounted
MTL.	Metal
MUL.	Mullion
N	
N.	North
N.I.C.	Not in Contract
N.T.S.	Not to Scale
NO. OR #	Number
NOM.	Nominal
O	
O.A.	Overall
O.C.	On Center
O.D.	Outside DIameter (Dim.)
O.F.C.I.	Owner Furnished Contractor Installed
O.F.O.I.	Owner Furnished Owner Installed
O.H.	Opposite Hand
O.R.D.	Overflow Roof Drain
OBS.	Obscure
OFF.	Office
OPNG.	Opening
OPP.	Opposite
P	
P.LAM.	Plastic Laminate
P.T.D.	Paper Towel Dispenser
P.T.D./R.	Combination Paper Towel Dispencer and Receptacle
P.T.R.	Paper Towel Receptacle
PL.	Plate
PLAS.	Plaster
PLYWD	Plywood
PR.	Pair
PRCST.	Pre-cast
PT.	Point
PTN.	Partition
Q	
Q.T.	Quarry Tile
R	
R.	Riser
R.D.	Roof Drain
R.O.	Rough Opening
R.W.L.	Rain Water Leader
RAD.	Radius
REF.	Reference
REFR.	Refrigerator
REINF.	Reinforce
REQD	Required
RESIL.	Resilient
RGTR.	Register
RM.	Room
RRM	Restroom
RWD	Redwood
S	
S.	South
S.C.	Solid Core
S.C.D.	Seat Cover Dispenser
S.D.	Soap Dispenser
S.N.D.	Sanitary Napkin Dispensr
S.SK.	Service Sink
SCHED.	Schedule
SECT.	Section
SH.	Shelf
SHR.	Shower
SHT.	Sheet
SIM.	Similar
SPEC.	Specification
SQ.	Square
SST.	Stainless Steel
STA.	Station
STD.	Standard
STL.	Steel
STO.	Storage
STRL.	Structural
SUSP.	Suspended
SYM.	Symmetrical
T	
T.&G.	Tongue and Groove
T.B.	Towel Bar
T.C.	Top of Curb
T.O.W.	Top of Wall
T.P.	Top of Pavement
T.P.D.	Toilet Paper Dispenser
T.V.	Television
TEL.	Telephone
TER.	Terazzo
THK.	Thick
TRD.	Tread
TYP.	Typical
U	
U.N.O.	Unless Noted Otherwise
UNIF.	Unfinished
UR.	Urinal
V	
V.B.	Vapor Barriers
V.C.G.	Vinyl Corner Guard
V.T.	Vinyl Tile
VAR.	Varies
VERT.	Vertical
VEST.	Vestibule
W	
W.	West
W.C.	Water Closet
W/	With
W/O	Without
WD.	Wood
WK.P.	Working Point
WP.	Waterproof
WSCT.	Wainscot
WT.	Weight

SYMBOL LEGEND

NORTH ARROW
- PROJECT NORTH
- TRUE NORTH
- NORTH

BENCHMARKS
- 1 — GRID LINE
- LEVEL 1 100' - 0" — LEVEL
- NOTE: 100' - 0" ELEVATION IS EQUAL TO FINISH FLOOR ELEVATION SHOWN ON CIVIL DRAWINGS.

SECTIONS
- SIM / 1 / A1.01 — BUILDING, WALL
- SECTION NUMBER
- SIMILAR (IF APPLICABLE)
- SHEET NUMBER

ELEVATIONS
- A6.01 — EXTERIOR; A5.01 — INTERIOR
- ELEVATION NUMBER
- SHEET NUMBER

ROOM TAG
- ROOM NAME 101 — ROOM NUMBER

LIFE SAFETY ROOM TAG
- ROOM NAME 1001 | 15,250 SF | 15 | 888
- OCCUPANCY LOAD
- OCCUPANCY FACTOR
- SQUARE FOOTAGE
- ROOM NUMBER

- REVISION TAG
- REVISION CLOUD

- X ; 5' - 8 3/4" — DIMENSION
- NOTE: ALL DIMENSION ARE TO FACE OF STUD, U.N.O.

- ℄ — CENTER LINE AND SYMBOL

DETAIL BUBBLE
- DETAIL NUMBER
- SIM — SIMILAR (IF APPLICABLE)
- 1 / A1.01 — SHEET NUMBER

- DATUM POINT
- 1 — KEYNOTE
- TA-1 — ACCESSORY TAG
- GYP — FINISH TAG
- ACT 12' - 0" — CEILING TAG
- 8888 — DOOR TAG
- A-A44i — WALL TAG
- W-1A — APPLIED WALL TREATMENT TAG
- W8 — WINDOW TAG
- 1 — GLAZING TAG

MATERIALS LEGEND

- EARTH
- CONCRETE
- MASONRY
- METAL
- PLYWOOD
- FINISH WOOD
- ROUGH WOOD
- BLOCKING
- RIGID INSULATION
- THERMAL INSULATION
- ACOUSTIC INSULATION

VICINITY MAP

CODE ANALYSIS

APN: 528-010-57

ZONING
Land use: 100 / Land zoning: PF

FEMA
Flood Zone: AE

Applicable Codes:
- **IBC -** 2018
- **IECC -** 2018
- **IFGC -** 2018
- **ICC/ANSI** 117.1 - 2009
- **ADA** 2010
- **IFC -** 2018
- **NFPA (54 and 58)** - STANDARDS
- **NEC** - 2017
- **UMC** - 2018
- **UPC** - 2018
- **NORTHERN NEVADA AMENDMENTS 2018**
- **NAC** - 477

Occupancy Classifications:
- S-2 Occupancy (Section 311.3) - Main occupancy
- R-2 Occupancy (Section 310.3) - Single Dwelling Unit
- B Occupancy (Section 304.1) - Accessory to "R-2" Occupancy, per section 508.2
- A-3 Occupancy (Section 303.1)

Fire Sprinklers Provided: **Yes - Installed in accordance with Section 903.3.1.1**

- Construction Type: **Type V-B**
- Allowable Height: 3 Story (Table 504.4) / 60'(Table 504.3)
- Actual Height: **28'- 0" / 1 Story**
- Allowable Area factor: 54,000 (with S-2) (Table 506.2)
- Frontage increase (If): 75% (Section 506)
- Allowable Area with Increase: Aa = At + (NS x If) --> {54,000+ [13,500 x 0.75]} = 64,125 sf
- Actual Area: 14,072 SF

Required separation of occupancies: 1-Hour (Table 508.4)

Fire Resistance Rating Requirements: (Table 601)

- Structural Frame: 0-hr
- Bearing Exterior Walls: 0-hr
- Bearing Interior Walls: 0-hr
- Non-Bearing Exterior Walls: 0-hr
- Non-Bearing Interior Walls: 0-hr
- Floor: 0-hr
- Roof: 0-hr

Maximun area of exterior wall openings: No Limit
(Table 705.8)

Means of Egress

- Spaces with One Exit: (Table 1006.2.1)

Occupant count up to and including **20** allowed on 1 exit for "R-2" occupancy with maximun common path of egress **125 ft.**, and **29** allowed on 1 exit for "S" occupancy with maximun common patch of **100ft.**

- Exit access travel distace: (Table 1017.2)
  S-2: 400 ft.
  R-2: 250 ft.
- Corridor fire-resistance rating (Table 1020.1)
  S: 0-hr
  R-2: N/A; Single Dwelling Unit

Total occupant load: (Table 1004.5 and sheet AE1.01 with the Life Safety Plan)
R: 62 occupants / S:36 occupants / B:36 occupants

IECC – 2018 (International Energy Conservation Code)
Nevada is Climate **Zone 5B**

Table 402.1.3 – Building Envelope Minimum Requirements (opaque Assemblies)

Item:	Required:	Provided:
Roof (Continuous above Deck)	R-30ci	R-30
Mass Walls (CMU)	R-11.4ci	R-12
Metal Framed Walls	R-13 + R-7.5ci	R-13 + R-9ci
Slab on Grade Floors	R-10 for 24" below	R-12
Opaque Doors (non-swinging)	R-4.75	R- 4.75

Table C402.4 – Building Envelope Requirements: Fenestration

Fixed fenestration	U- 0.31
Operable fenestration	U- 0.31
Metal Entry Doors	U- 0.16
Over Head Door	U-0.33
SHGC	SEW: 0.38 N: 0.51

Section C402.5 – Air Leakage (Mandatory)
Continuous Air Barrier is required

Section: C402.5.1 – Air Barriers
A continuous air barrier is required and must comply with C402.5.1.2.1
Roof: Extruded polystyrene insulation board ½" thick min.
Foil-back polyisocyanurate insulation board having a thickness of not less than ½"
Fully adhered single-ply roof membrane
Walls: Exterior or Interior Gypboard having a thickness of not lesss than ½".
Fully Grouted Concrete Block or Masonry.

Plumbing Fixtures Count

Section 2902 The number of fixtures shall be determined by this code' (Based on Table 2902.1 requirements). see Calculations below.

Table 2902.1 Minimum Number of Required Plumbing Fixtures

FIXTURE REQUIREMENTS	OCCUPANCY	WATER CLOSETS M	WATER CLOSETS F	LAVATORIES M	LAVATORIES F	BATHTUBS OR SHOWERS	DRINKING FOUNTAINS	SERVICE SINK
	GROUP S-2	1 per 100		1 per 100		-	1 per 1000	
	36 OCCUPANTS TOTAL FOR (S-2)	18	18	18	18	n/a	0.036	
		0.18	0.18	0.18	0.18			
	GROUP R-2	1 per 10		1 per 10		1 per 8	1 per 100	
	62 OCCUPANTS TOTAL FOR (R-2)	31	31	31	31	7.75	0.62	
		3.10	3.10	3.10	3.10			
	GROUP B	1 per 25 for first 50		1 per 40 for first 80		-	1 per 100	
	36 OCCUPANTS TOTAL FOR (B)	18	18	18	18	n/a	0.36	
		0.72	0.72	0.45	0.45			
	REQUIRED:	4	4	4	4	8	1	1
	PROVIDED:	5	6	5	6	11	1	2

DEFERRED SUBMITTALS:
1. SPRINKLERS
2. ALARM
3. KITCHEN HOOD SUPPRESSION SYSTEM
4. TANKS/FUEL DISPENSING

SCOPE OF WORK

THE NEW FIRE STATION #6 FOR THE CITY OF SPARKS FIRE DEPARTMENT PROVIDES EXPANDED COVERAGE FOR THE GENERAL VICINITY BETWEEN PYRAMID WAY AND THE RED HAWK GOLF & RESORT, NORTH OF LOS ALTOS PARKWAY AND SOUTH OF LA POSADA DRIVE. THIS 14,072SF, SINGLE-STORY, TYPE II-B PUBLIC FACILITY IS LOCATED AT THE SOUTHWEST CORNER OF THE ROLLING MEADOWS ROUND-ABOUT. IT IS EXPECTED THAT THIS FACILITY WILL SERVE THIS REGION FOR THE NEXT 30+ YEARS.

THE FACILITY IS ORIENTED EAST-WEST TO MAXIMIZE ENVIRONMENTAL CONTROL AND IS DIVIDED INTO 3 MAIN COMPONENTS: MAIN BUILDING (OFFICE & RESIDENTIAL FUNCTIONS), APPARATUS BAY (ENCLOSED GARAGE BAYS FOR FIRE APPARATUS), AND APPARATUS SUPPORT (TECHNICAL SPACES). THIS STATION IS DESIGNED TO SUPPORT 9 CREW MEMBERS PER SHIFT AND HOUSE UP TO 6 FIRE APPARATUS WITHIN THE BAYS. ON-SITE VEHICLE CLEANING OCCURS WITHIN THE BAYS AND TRENCH DRAINS WILL BE CONNECTED TO A SAND-OIL INTERCEPTOR.

PUBLIC ACCESS TO THE FACILITY IS LIMITED TO THE MAIN ENTRY VESTIBULE FOR SECURITY AND STAFF CAN ACCESS THE FACILITY THROUGH DESIGNATED SECURE DOORWAYS. THE PRIMARY FIRE TRUCK ACCESS IS LOCATED ALONG THE EASTERN EDGE OF THE PROPERTY AND IT IS ANTICIPATED THAT THE MAIN POINTS OF UTILITY CONNECTIONS WILL BE LOCATED IN THIS ZONE AS WELL. INITIAL TURNING-RADII STUDIES ACCOUNT FOR VEHICLES UP TO THE SIZE OF A LADDER TRUCK BUT ACTUAL VEHICLE DESIGNATIONS FOR THIS STATION ARE STILL UNDER REVIEW AS NOTED ON THE ARCHITECTURAL SITE PLAN. STAFF AND VISITOR PARKING ARE CO-LOCATED ALONG THE NORTH PORTION OF THE SITE TO SERVE AS A BUFFER BETWEEN THE ROUND-ABOUT AND THE FIRE STATION.

MECHANICAL EQUIPMENT IS PRIMARILY LOCATED AT THE GROUND LEVEL AND WILL BE ON THE REAR (WEST) OF THE FACILITY AND WILL BE SCREENED BY A DECORATIVE FENCE. THE MATERIALITY OF THE STRUCTURE IS PRIMARILY COMPOSED OF MIXED-SIZE CMU BLOCK, WITH CORRUGATED METAL, EIFS, AND PHENOLIC PANEL ACCENTS. EACH ELEVATION IS ARTICULATED USING RECESSED WINDOWS AND DOORWAYS, AS DEPICTED IN THE BUILDING ELEVATIONS.

DRAWING INDEX

#	SHEET NAME	60% DD (01.24.2023)	90% CD (04.12.2023)	PERMIT SET (04/12/2023)	BUD SET (01/04/2024)
00_COVER SHEET					
0.0	COVER SHEET	■	■	■	■
01_GENERAL					
G0.00	GENERAL SHEET	■	■	■	■
G0.10	IECC COMPLIANCE REPORT		■	■	■
G1.01	GENERAL ACCESSIBILITY DETAILS	■	■	■	■
G1.02	GENERAL ACCESSIBILITY DETAILS	■	■	■	■
G1.03	GENERAL ACCESSIBILITY DETAILS	■	■	■	■
G1.11	LIFE SAFETY FIRE RESISTIVE LISTINGS		■	■	■
G1.12	LIFE SAFETY FIRE RESISTIVE LISTINGS		■	■	■
G1.13	LIFE SAFETY FIRE RESISTIVE LISTINGS		■	■	■
AE1.01	LIFE SAFETY PLAN	■	■	■	■
AE2.01	LIFE SAFETY DETAILS	■	■	■	■
02_CIVIL					
T-1	TITLE SHEET	■	■	■	■
N-1	CIVIL NOTES	■	■	■	■
N-2	CIVIL NOTES	■	■	■	■
DE-1	DEMOLITION PLAN	■	■	■	■
S-1	CIVIL SITE PLAN	■	■	■	■
U-1	UTILITY PLAN	■	■	■	■
G-1	GRADING PLAN	■	■	■	■
D-1	DETAIL SHEET		■	■	■
D-2	DETAIL SHEET		■	■	■
D-3	DETAIL SHEET		■	■	■
EC-1	EROSION CONTROL PLAN		■	■	■
03_LANDSCAPE					
L0.01	LANDSCAPE NOTES & OVERALL SCHEDULES	■	■	■	■
L1.01	PLANTING PLAN	■	■	■	■
L1.02	PLANTING DETAILS	■	■	■	■
L2.01	IRRIGATION PLAN	■	■	■	■
L2.02	IRRIGATION DETAILS	■	■	■	■
L2.03	IRRIGATION DETAILS (CONT'D)		■	■	■
04_ARCHITECTURAL SITE					
AS1.01	OVERALL SITE PLAN	■	■	■	■
AS1.11	ARCHITECTURAL SITE PLAN (ENLARGED)		■	■	■
AS2.01	ARCHITECTURAL SITE DETAILS		■	■	■
05_ARCHITECTURAL					
A0.01	SLAB PLAN	■	■	■	■
A1.01	OVERALL FLOOR PLAN	■	■	■	■
A1.11	DIMENSION PLAN	■	■	■	■
A1.21	ENLARGED PLANS AND ELEVATIONS	■	■	■	■
A1.31	FLOOR FINISH PLAN	■	■	■	■
A1.41	FURNITURE AND EQUIPMENT PLAN	■	■	■	■
A2.01	BUILDING MATERIAL SCHEDULES & ROOM FINISH SCHEDULE	■	■	■	■
A2.11	DOOR SCHEDULE, PANEL AND FRAME TYPES	■	■	■	■
A2.12	DOOR DETAILS		■	■	■
A2.13	DOOR DETAILS		■	■	■
A2.21	WINDOW TYPES AND DETAILS	■	■	■	■
A2.22	WINDOW DETAILS		■	■	■
A2.31	PARTITION TYPES	■	■	■	■
A2.32	PARTITION TYPES	■	■	■	■
A2.35	PARTITION AND PLAN DETAILS		■	■	■
A2.51	SIGNAGE PLAN	■	■	■	■
A2.52	SIGNAGE SCHEDULE, SIGNAGE TYPES & DETAILS	■	■	■	■
A3.01	REFLECTED CEILING PLAN	■	■	■	■
A3.11	CEILING DETAILS	■	■	■	■
A3.12	CEILING DETAILS		■	■	■
A4.01	OVERALL ROOF PLAN	■	■	■	■
A4.11	ROOF DETAILS	■	■	■	■
A4.12	ROOF DETAILS		■	■	■
A4.13	ROOF DETAILS		■	■	■
A5.01	INTERIOR ELEVATIONS	■	■	■	■
A5.02	INTERIOR ELEVATIONS		■	■	■
A5.03	INTERIOR ELEVATIONS		■	■	■
A5.11	INTERIOR FINISH DETAILS		■	■	■
A6.01	EXTERIOR ELEVATIONS	■	■	■	■
A6.02	EXTERIOR ELEVATIONS	■	■	■	■
A7.01	BUILDING SECTIONS	■	■	■	■
A7.02	BUILDING SECTIONS	■	■	■	■
A7.11	WALL SECTIONS	■	■	■	■
A7.12	WALL SECTIONS	■	■	■	■
A7.13	WALL SECTIONS	■	■	■	■
A7.21	SECTION DETAILS		■	■	■
A8.01	CASEWORK PLAN AND ELEVATIONS	■	■	■	■
A8.02	CASEWORK PLAN AND ELEVATIONS	■	■	■	■
A8.03	CASEWORK PLAN AND ELEVATIONS	■	■	■	■
A8.11	CASEWORK SECTIONS AND DETAILS		■	■	■
A9.01	MISCELLANEOUS DETAILS		■	■	■

#	SHEET NAME	60% DD (01.24.2023)	90% CD (04.12.2023)	PERMIT SET (04/12/2023)	BUD SET (01/04/2024)
06_STRUCTURAL					
S0	STRUCTURAL GENERAL NOTES	■	■	■	■
S0.1	SPECIAL INSPECTIONS & QUALITY ASSURANCE	■	■	■	■
S0.2	TYP. CONC. & FOUNDATION DETAILS	■	■	■	■
S0.3	TYP. CONC. & CMU DETAILS	■	■	■	■
S0.4	TYP. MASONRY DETAILS	■	■	■	■
S0.5	TYP. STEEL DETAILS	■	■	■	■
S0.6	TYP. ROOF FRAMING DETAILS	■	■	■	■
S0.7	TYP. ROOF FRAMING DETAILS	■	■	■	■
S0.8	TYP. INTERIOR COLD-FORMED STEEL DETAILS	■	■	■	■
S0.9	TYP. INTERIOR COLD-FORMED STEEL DETAILS	■	■	■	■
S0.10	TYP. SITE DETAILS	■	■	■	■
S2	FOUNDATION PLAN	■	■	■	■
S3	LOW ROOF FRAMING PLAN	■	■	■	■
S4	HIGH ROOF FRAMING PLAN	■	■	■	■
S5	LOW ROOF JOIST LOADING PLAN		■	■	■
S6	HIGH ROOF JOIST LOADING PLAN		■	■	■
S7	STRUCTURAL SECTIONS	■	■	■	■
S8	STRUCTURAL SECTIONS	■	■	■	■
S9	STRUCTURAL WALL ELEVATIONS	■	■	■	■
S10	CANOPY ENLARGED PLANS AND SECTIONS		■	■	■
SD1	STRUCTURAL DETAILS		■	■	■
SD2	CLERESTORY TRUSS ELEVATIONS AND DETAILS		■	■	■
08_MECHANICAL					
M0.00	MECHANICAL COVER SHEET	■	■	■	■
M0.10	MECHANICAL DIAGRAMS		■	■	■
M0.11	MECHANICAL DIAGRAMS		■	■	■
M0.12	MECHANICAL DIAGRAMS		■	■	■
M0.13	MECHANICAL CALCULATIONS		■	■	■
M0.20	MECHANICAL SCHEDULES	■	■	■	■
M0.21	MECHANICAL SCHEDULES	■	■	■	■
M0.22	MECHANICAL SCHEDULES	■	■	■	■
M2.00	OVERALL FLOOR PLAN - MECHANICAL	■	■	■	■
M2.01	OVERALL FLOOR PLAN - MECHANICAL PRESSURIZATION		■	■	■
M3.00	OVERALL ROOF PLAN - MECHANICAL	■	■	■	■
M4.00	MECHANICAL ENLARGED PLANS	■		■	■
M4.01	MECHANICAL ENLARGED PLANS	■	■	■	■
M4.02	MECHANICAL ENLARGED PLANS	■	■	■	■
M4.03	MECHANICAL ENLARGED PLANS	■	■	■	■
M4.04	MECHANICAL ENLARGED PLAN	■	■	■	■
M5.01	MECHANICAL SCHEMATICS		■	■	■
M5.02	APPARATUS BAY VEHICLE EXHAUST SCHEMATIC		■	■	■
M6.01	CONTROL DIAGRAMS		■	■	■
M6.02	CONTROL DIAGRAMS		■	■	■
M6.03	CONTROL DIAGRAMS		■	■	■
M8.01	MECHANICAL IECC		■	■	■
M8.02	MECHANICAL IECC		■	■	■
M8.03	MECHANICAL IECC		■	■	■
M9.01	HOOD SHOP DRAWINGS		■	■	■
M9.02	HOOD SHOP DRAWINGS		■	■	■
M9.03	HOOD SHOP DRAWINGS		■	■	■
M9.04	HOOD SHOP DRAWINGS		■	■	■
09_PLUMBING					
P0.00	PLUMBING COVER SHEET	■	■	■	■
P0.10	PLUMBING DIAGRAMS		■	■	■
P0.11	PLUMBING DIAGRAMS		■	■	■
P0.12	PLUMBING DIAGRAMS		■	■	■
P0.20	PLUMBING SCHEDULES	■	■	■	■
P1.00	SITE PLAN - PLUMBING			■	■
P2.00	OVERALL FLOOR PLAN - WASTE & VENT	■	■	■	■
P2.10	OVERALL FLOOR PLAN - WATER & GAS	■	■	■	■
P3.00	OVERALL ROOF PLAN - PLUMBING	■	■	■	■
10_ELECTRICAL					
E0.00	ELECTRICAL COVER SHEET	■	■	■	■
E0.10	ELECTRICAL DIAGRAMS	■	■	■	■
E0.11	ELECTRICAL DIAGRAMS		■	■	■
E0.20	PANEL SCHEDULES	■	■	■	■
E0.21	ELECTRICAL SCHEDULES		■	■	■
E0.30	LUMINAIRE SCHEDULE		■	■	■
E1.00	SITE PLAN - ELECTRICAL	■	■	■	■
E1.01	SITE PLAN - LIGHTING	■		■	■
E2.00	OVERALL FLOOR PLAN - LIGHTING	■	■	■	■
E2.10	OVERALL FLOOR PLAN - POWER	■	■	■	■
E3.00	OVERALL ROOF PLAN - POWER	■	■	■	■
E8.01	ELECTRICAL IECC		■	■	■
11_TECHNOLOGY					
T0.00	TECHNOLOGY COVER SHEET	■	■	■	■
T0.10	TECHNOLOGY DIAGRAMS	■	■	■	■
T0.11	TECHNOLOGY DIAGRAMS	■	■	■	■
T0.12	TECHNOLOGY DIAGRAMS		■	■	■
T0.20	TECHNOLOGY SCHEDULES	■	■	■	■
T1.00	SITE PLAN - TECHNOLOGY	■	■	■	■
T2.00	FLOOR PLAN - VOICE/DATA	■	■	■	■
T2.10	FLOOR PLAN - AUDIO/VIDEO	■	■	■	■
T2.20	FLOOR PLAN - SECURITY	■	■	■	■
T3.00	ROOF PLAN - TECHNOLOGY	■	■	■	■
T4.01	TECHNOLOGY ENLARGED PLANS	■	■	■	■

GENERAL NOTES

1 ALL CONSTRUCTION SHALL CONFORM TO THE AMERICANS WITH DISABILITIES ACT (ADA), LOCAL GOVERNING FIRE, SAFETY, AND BUILDING CODES, REQUIREMENTS AND REGULATIONS, 2018 IBC, ANSI A117.1 -2009.
2 ALL DIMENSIONS ARE TO THE FACE OF CONCRETE OR MASONRY, FACE OF STUD WALLS, OR CENTERLINE OF COLUMNS UNLESS NOTED OTHERWISE.
3 COORDINATE ALL DISCIPLINES AND ALL ASPECTS OF WORK. CONFLICTS AND DISCREPANCIES SHALL BE BROUGHT TO THE ATTENTION OF THE ARCHITECT IMMEDIATELY.
4 ALL FINISH ELEVATIONS ARE TO TOP OF WALKS, GRADE, PAVING, WALLS, ROOFS, AND SLABS ETC., UNLESS NOTED OTHERWISE
5 ALL SOIL BERMS SHALL BE CONSTRUCTED TO DRAIN AWAY FROM VERTICAL SURFACES
6 ALL GROUND PREPARATION SHALL BE IN CONFORMANCE WITH THE RECOMMENDATIONS OF THE GEOTECHNICAL REPORT. THE CONTRACTOR SHALL BE RESPONSIBLE TO OBTAIN A COPY OF THIS REPORT. ALL RECOMMENDATIONS AND REQUIREMENTS CONTAINED WITHIN THE SOILS REPORT ARE TO BE FOLLOWED UNLESS SPECIFICALLY NOTED OTHERWISE IN THE DRAWINGS OR TECHNICAL SPECIFICATIONS
7 ALL CONCRETE SURFACES WHICH RECEIVE A SPECIAL FINISH, FLOOR COVERING, COATINGS, HARDENERS, ETC. SHALL BE CONSTRUCTED IN ACCORDANCE WITH THE SPECIFIC FINISH MANUFACTURER'S SPECIFICATIONS AND INSTRUCTIONS. PRIOR TO APPLICATION OF A SPECIAL FINISH, A WRITTEN ACCEPTANCE OF THE SURFACE SHALL BE SUBMITTED TO THE ARCHITECT BY THE GENERAL CONTRACTOR
8 SLOPE ALL CONCRETE SURFACES ADJACENT TO THE BUILDING AWAY FROM THE BUILDING
9 ALL CONCRETE SURFACES UPON WHICH PEDESTRIANS CAN WALK SHALL BE FINISHED SUCH THAT THE MINIMUM STATIC COEFFICIENT OF SLIDING FRICTION BETWEEN THE SURFACE AND NORMAL HARD-SOLED SHOES = 0.60 AND 0.80 FOR RAMPS
10 ALL CONCRETE AND MASONRY CONNECTIONS AND JOINTS SHALL BE COMPLETELY SEALED AND WATERPROOFED WITH BACKER ROD AND SEALANT AS RECOMMENDED AND SPECIFIED BY EACH SPECIFIC APPLICATION
11 ALL EXPANSION JOINTS IN CONCRETE FLOORS SHALL BE COMPLETELY CAULKED AND SEALED
12 CONTRACTOR SHALL COORDINATE ALL CONCRETE SLABS TO SLOPE AWAY FROM BUILDING, TO SLOPE TOWARD DRAINS, ETC., IN ACCORDANCE WITH THE ARCHITECTURAL AND STRUCTURAL DRAWINGS
13 ALL CONCRETE BLOCK SURFACES ADJACENT TO SOIL BERMS AND PLANTERS SHALL BE PROVIDED WITH A MONOLITHIC WATERPROOF SYSTEM EXTENDING FROM TOP OF FOOTING TO 2" ABOVE SOIL
14 ALL PLANTER AND RETAINING WALLS SHALL BE CONSTRUCTED WITH 3/4" DIAMETER PVC WEEP HOLES AT 6'-0" O.C. MAXIMUM
15 ALL EXPOSED WELDS SHALL BE GROUND SMOOTH AND FINISHED WITH NO PITS FOR ARCHITECTURAL APPEARANCE
16 ALL EXPOSED METAL SURFACES THAT ARE NOT PREFINISHED ARE TO BE PAINTED
17 PROVIDE METAL STRAPPING AND ANCHORAGE FOR CEILING AND WALL MOUNTED EQUIPMENT
18 ALL SHEET METAL FLASHINGS ARE TO BE IN ACCORDANCE WITH ARCHITECTURAL SHEET METAL MANUAL AS PRODUCED BY SHEET METAL AND AIR CONDITIONING CONTRACTORS NATIONAL ASSOCIATION (SMACNA)
19 PROVIDE SEPARATION AND/OR APPROPRIATE COATING BETWEEN ALL DISSIMILAR METALS. ALL TRANSITIONS BETWEEN SIMILAR OR DISSIMILAR MATERIALS, EQUIPMENT, ACCESSORIES, ETC. SHALL BE CAULKED AND/OR SEALED AS REQUIRED
20 CONTRACTOR SHALL FIELD VERIFY DIMENSIONALLY ALL OPENINGS PRIOR TO MANUFACTURING WINDOW AND DOOR FRAMES
21 ALL DOOR AND FRAME ASSEMBLIES AND INSTALLATIONS SHALL BE IN STRICT ACCORDANCE WITH UNIFORM LIFE SAFETY CODES GOVERNING EDITION. ALL EXTERIOR DOORS SHALL BE COMPLETE WITH PROPER THRESHOLDS, ASTRAGALS, WEATHERSTRIPPING, HOLDS AND DOOR BOTTOMS
22 ALL FIRE EXTINGUISHER FINISH ELEVATIONS ARE TO TOP OF WALKS, GRADE, PAVING, WALLS, ROOFS, ETC., UNLESS NOTED OTHERWISE. LOCATIONS TO BE FINALIZED BY THE STATE FIRE MARSHAL. LOCATIONS SHOWN ON THE DRAWINGS ARE FOR REFERENCE ONLY
23 COATINGS MUST COMPLY WITH ALL LOCAL AND FEDERAL LAWS GOVERNING VOLATILE ORGANIC COMPOUNDS, AND ALL ENVIRONMENTAL PROTECTION AGENCY RECOMMENDATIONS
24 CONTRACTOR SHALL NOT SCALE ANY DRAWING IN THIS BID SET
25 THE AUTOMATIC FIRE SPRINKLER DRAWINGS, THE HYDRAULIC CALCULATIONS AND THE MATERIAL SPECIFICATIONS SHALL BE SUBMITTED TO THE STATE OF NEVADA, OFFICE OF THE STATE FIRE MARSHAL BY A LICENSED FIRE SPRINKLER CONTRACTOR FOR REVIEW PRIOR TO INSTALLATION
26 THE FIRE ALARM DRAWINGS AND MATERIAL SPECIFICATIONS SHALL BE SUBMITTED TO THE STATE OF NEVADA OFFICE OF THE STATE FIRE MARSHAL BY A LICENSED CONTRACTOR FOR REVIEW PRIOR TO INSTALLATION. "...THESE DEFERRED SUBMITTAL ITEMS SHALL BE SUBMITTED TO THE REGISTERED DESIGN PROFESSIONAL IN RESPONSIBLE CHARGE WHO SHALL REVIEW THEM AND FORWARD THEM TO THE BUILDING OFFICIAL WITH A NOTATION INDICATING THAT THE DEFERRED SUBMITTAL DOCUMENTS HAVE BEEN REVIEWED AND THAT THEY HAVE BEEN FOUND TO BE IN GENERAL CONFORMANCE WITH THE DESIGN OF THE BUILDING. THE DEFERRED SUBMITTAL ITEMS SHALL NOT BE INSTALLED UNTIL THEIR DESIGN AND SUBMITTAL DOCUMENTS HAVE BEEN APPROVED BY THE BUILDING OFFICIAL..." SEE MECHANICAL, ELECTRICAL, PLUMBING AND STRUCTURAL FOR ADDITIONAL DEFERRED SUBMITTAL REQUIREMENTS
27 CONTRACTOR IS RESPONSIBLE FOR COORDINATING THE LOCATION OF THE ACCESS DOORS FOR PLUMBING VALVES, CLEAN OUTS, WATER HAMMER ARRESTORS ETC. TO ENSURE SERVICEABILITY OF THE EQUIPMENT. ALL ACCESS DOORS LOCATED ON WALLS SHALL BE PAINTED TO MATCH WALL. ALL ACCESS PANELS LOCATED IN CEILINGS SHALL BE PAINTED TO MATCH CEILING. ALL ACCESS DOORS EASILY ACCESSIBLE TO THE PUBLIC SHALL BE LOCKABLE. PROVIDE A CYLINDER LOCK WITH LATCH AND TWO KEYS FOR EACH DOOR
28 ALL NOTES, DETAILS, SPECIFICATIONS, AND OTHER PROVISIONS INCLUDED IN THESE CONTRACT DOCUMENTS, WHETHER CROSS REFERENCE OR NOT, ARE PART OF THIS PROJECT. ALL WORK SHOWN HEREIN SHALL BE PERFORMED WITHOUT EXCEPTION

tsk
225 South Arlington Avenue,
Suite A
Reno NV, 89501
phone: 775.857.2949
fax: 775.857.2403
www.tska.com

KOLBY M HARPSTEAD REGISTERED ARCHITECT No. 8775 01/04/2024 STATE OF NEVADA

THESE DRAWINGS AND SPECIFICATIONS ARE THE PROPERTY OF TATE SNYDER KIMSEY ARCHITECTS AND MAY NOT BE REPRODUCED OR USED FOR ANY PURPOSE WITHOUT THE ARCHITECTS WRITTEN CONSENT.
AS INSTRUMENTS OF SERVICE, THESE DOCUMENTS ARE NOT FINAL AND READY FOR USE, AND THEREFORE NOT VALID, UNLESS THEY ARE SEALED, SIGNED AND DATED.
Copyright, Ltd 2024

Consultant

PLEASE RECYCLE

Project
SPARKS Fire Station #6

6963 SCHEIDBAR ROAD, SPARKS NEVADA 89436

Job No: 22-043

Owner
CITY OF SPARKS

CITY OF SPARKS FIRE DEPARTMENT Est. 1905

BID SET

REVISIONS		
REV	DATE	DESCRIPTION
A	05.18.23	Review Comments

Sheet Title
GENERAL SHEET

Date: JANUARY 4, 2024
Sheet No:
G0.00

COM*check* Software Version COMcheckWeb

Envelope Compliance Certificate

Project Information

Energy Code:	2018 IECC
Project Title:	Sparks Fire Station #6
Location:	Reno, Nevada
Climate Zone:	5b
Project Type:	New Construction
Vertical Glazing / Wall Area:	10%

Construction Site:
Wingfield Hills Road
Sparks, Nevada 89436

Owner/Agent:
City of Sparks

Designer/Contractor:
TSK Architects
225 South Arlington Avenue Suite A
Reno, Nevada 89501
775-857-2949
kolby.harpstead@tska.com

Additional Efficiency Package(s)

Credits: 1.0 Required 1.0 Proposed
Reduced Lighting Power, 1.0 credit

Building Area	Floor Area
1-Fire Station : Nonresidential	14072

Envelope Assemblies

Assembly	Gross Area or Perimeter	Cavity R-Value	Cont. R-Value	Proposed U-Factor	Budget U-Factor(a)
Floor: Unheated Slab-On-Grade, Vertical 2 ft., [Bldg. Use 1 - Fire Station] (c)	596	---	12.0	0.532	0.540
Roof: Insulation Entirely Above Deck, [Bldg. Use 1 - Fire Station]	14072	---	30.0	0.032	0.032
NORTH					
4/A6.01: Concrete Block, 8in., Solid Grouted, Normal Density, Furring: Metal, [Bldg. Use 1 - Fire Station]	1615	0.0	12.0	0.067	0.090
Door: Insulated Metal, Swinging, [Bldg. Use 1 - Fire Station]	21	---	---	0.310	0.370
Door: Insulated Metal, Swinging, [Bldg. Use 1 - Fire Station]	21	---	---	0.310	0.370
Door: Insulated Metal, Swinging, [Bldg. Use 1 - Fire Station]	21	---	---	0.310	0.370
4/A6.01: Concrete Block, 12in., Solid Grouted, Normal Density, Furring: Metal, [Bldg. Use 1 - Fire Station]	333	0.0	12.0	0.066	0.090
4/A6.01: Steel-Framed, 16in. o.c., [Bldg. Use 1 - Fire Station]	736	13.0	9.0	0.059	0.064
Window: Metal Frame with Thermal Break: Fixed, Perf. Specs.: Product ID FA-KAW-33979, SHGC 0.51, [Bldg. Use 1 - Fire Station] (b)	412	---	---	0.310	0.380
3/A6.01: Concrete Block, 8in., Solid Grouted, Normal Density, Furring: Metal, [Bldg. Use 1 - Fire Station]	126	0.0	12.0	0.067	0.090
Window: Metal Frame with Thermal Break: Fixed, Perf. Specs.: Product ID FA-KAW-33979, SHGC 0.51, [Bldg. Use 1 - Fire Station] (b)	16	---	---	0.310	0.380
6/A6.02: Concrete Block, 8in., Solid Grouted, Normal Density, Furring: Metal, [Bldg. Use 1 - Fire Station]	654	0.0	12.0	0.067	0.090
Window: Metal Frame with Thermal Break: Fixed, Perf. Specs.: Product ID FA-KAW-33979, SHGC 0.51, [Bldg. Use 1 - Fire Station] (b)	16	---	---	0.310	0.380

Assembly	Gross Area or Perimeter	Cavity R-Value	Cont. R-Value	Proposed U-Factor	Budget U-Factor(a)
Window: Metal Frame with Thermal Break: Fixed, Perf. Specs.: Product ID FA-KAW-33979, SHGC 0.51, [Bldg. Use 1 - Fire Station] (b)	16	---	---	0.310	0.380
Window: Metal Frame with Thermal Break: Fixed, Perf. Specs.: Product ID FA-KAW-33979, SHGC 0.51, [Bldg. Use 1 - Fire Station] (b)	16	---	---	0.310	0.380
EAST					
1/A6.01: Concrete Block, 8in., Solid Grouted, Normal Density, Furring: Metal, [Bldg. Use 1 - Fire Station]	790	0.0	12.0	0.067	0.090
Window: Metal Frame with Thermal Break: Fixed, Perf. Specs.: Product ID FA-KAW-33979, SHGC 0.38, [Bldg. Use 1 - Fire Station] (b)	16	---	---	0.310	0.380
Window: Metal Frame with Thermal Break: Fixed, Perf. Specs.: Product ID FA-KAW-33979, SHGC 0.38, [Bldg. Use 1 - Fire Station] (b)	16	---	---	0.310	0.380
Window: Metal Frame with Thermal Break: Fixed, Perf. Specs.: Product ID FA-KAW-33979, SHGC 0.38, [Bldg. Use 1 - Fire Station] (b)	16	---	---	0.310	0.380
Door: Glass (over 50% glazing): Metal Frame, Entrance Door, Perf. Specs.: Product ID FA-KAW-33979, SHGC 0.38, [Bldg. Use 1 - Fire Station] (b)	25	---	---	0.160	0.770
Window: Metal Frame with Thermal Break: Fixed, Perf. Specs.: Product ID FA-KAW-33979, SHGC 0.38, [Bldg. Use 1 - Fire Station] (b)	18	---	---	0.310	0.380
1/A6.01: Concrete Block, 8in., Solid Grouted, Normal Density, Furring: Metal, [Bldg. Use 1 - Fire Station]	167	0.0	12.0	0.067	0.090
1/A6.01: Concrete Block, 12in., Solid Grouted, Normal Density, Furring: Metal, [Bldg. Use 1 - Fire Station]	1663	0.0	12.0	0.066	0.090
Door: Insulated Metal, Swinging, [Bldg. Use 1 - Fire Station]	21	---	---	0.310	0.370
Door: Insulated Metal, Non-Swinging, [Bldg. Use 1 - Fire Station]	196	---	---	0.330	0.179
Door: Insulated Metal, Non-Swinging, [Bldg. Use 1 - Fire Station]	196	---	---	0.330	0.179
Door: Insulated Metal, Non-Swinging, [Bldg. Use 1 - Fire Station]	196	---	---	0.330	0.179
SOUTH					
2/A6.01: Concrete Block, 8in., Solid Grouted, Normal Density, Furring: Metal, [Bldg. Use 1 - Fire Station]	120	0.0	12.0	0.067	0.090
8/A6.02: Concrete Block, 8in., Solid Grouted, Normal Density, Furring: Metal, [Bldg. Use 1 - Fire Station]	1900	0.0	12.0	0.067	0.090
Door: Insulated Metal, Swinging, [Bldg. Use 1 - Fire Station]	21	---	---	0.310	0.370
Door: Glass (over 50% glazing): Metal Frame, Entrance Door, Perf. Specs.: Product ID Nanowall, SHGC 0.38, [Bldg. Use 1 - Fire Station] (b)	118	---	---	0.310	0.770
Window: Metal Frame with Thermal Break: Fixed, Perf. Specs.: Product ID FA-KAW-33979, SHGC 0.38, [Bldg. Use 1 - Fire Station] (b)	16	---	---	0.310	0.380
Window: Metal Frame with Thermal Break: Fixed, Perf. Specs.: Product ID FA-KAW-33979, SHGC 0.38, [Bldg. Use 1 - Fire Station] (b)	16	---	---	0.310	0.380
Window: Metal Frame with Thermal Break: Fixed, Perf. Specs.: Product ID FA-KAW-33979, SHGC 0.38, [Bldg. Use 1 - Fire Station] (b)	16	---	---	0.310	0.380
Window: Metal Frame with Thermal Break: Fixed, Perf. Specs.: Product ID FA-KAW-33979, SHGC 0.38, [Bldg. Use 1 - Fire Station] (b)	16	---	---	0.310	0.380
Window: Metal Frame with Thermal Break: Fixed, Perf. Specs.: Product ID FA-KAW-33979, SHGC 0.38, [Bldg. Use 1 - Fire Station] (b)	16	---	---	0.310	0.380
Window: Metal Frame with Thermal Break: Fixed, Perf. Specs.: Product ID FA-KAW-33979, SHGC 0.38, [Bldg. Use 1 - Fire	16	---	---	0.310	0.380

Assembly	Gross Area or Perimeter	Cavity R-Value	Cont. R-Value	Proposed U-Factor	Budget U-Factor(a)
Station] (b)					
8/A6.02: Concrete Block, 12in., Solid Grouted, Normal Density, Furring: Metal, [Bldg. Use 1 - Fire Station]	333	0.0	12.0	0.066	0.090
8/A6.02: Steel-Framed, 16in. o.c., [Bldg. Use 1 - Fire Station]	736	13.0	9.0	0.059	0.064
Window: Metal Frame with Thermal Break: Fixed, Perf. Specs.: Product ID FA-KAW-33979, SHGC 0.38, [Bldg. Use 1 - Fire Station] (b)	412	---	---	0.310	0.380
7/A6.02: Concrete Block, 8in., Solid Grouted, Normal Density, Furring: Metal, [Bldg. Use 1 - Fire Station]	347	0.0	12.0	0.067	0.090
Door: Insulated Metal, Swinging, [Bldg. Use 1 - Fire Station]	21	---	---	0.310	0.370
Door: Insulated Metal, Swinging, [Bldg. Use 1 - Fire Station]	46	---	---	0.310	0.370
WEST					
5/A6.02: Concrete Block, 8in., Solid Grouted, Normal Density, Furring: Metal, [Bldg. Use 1 - Fire Station]	790	0.0	12.0	0.067	0.090
Door: Insulated Metal, Swinging, [Bldg. Use 1 - Fire Station]	30	---	---	0.310	0.370
Door: Insulated Metal, Swinging, [Bldg. Use 1 - Fire Station]	46	---	---	0.310	0.370
5/A6.02: Concrete Block, 8in., Solid Grouted, Normal Density, Furring: Metal, [Bldg. Use 1 - Fire Station]	167	0.0	12.0	0.067	0.090
5/A6.02: Concrete Block, 12in., Solid Grouted, Normal Density, Furring: Metal, [Bldg. Use 1 - Fire Station]	1663	0.0	12.0	0.066	0.090
Door: Insulated Metal, Non-Swinging, [Bldg. Use 1 - Fire Station]	196	---	---	0.330	0.179
Door: Insulated Metal, Non-Swinging, [Bldg. Use 1 - Fire Station]	196	---	---	0.330	0.179
Door: Insulated Metal, Non-Swinging, [Bldg. Use 1 - Fire Station]	196	---	---	0.330	0.179

(a) Budget U-factors are used for software baseline calculations ONLY, and are not code requirements.
(b) Fenestration product performance must be certified in accordance with NFRC and requires supporting documentation.
(c) Slab-On-Grade proposed and budget U-factors shown in table are F-factors.

Envelope PASSES: Design 8% better than code

Envelope Compliance Statement

Compliance Statement: The proposed envelope design represented in this document is consistent with the building plans, specifications, and other calculations submitted with this permit application. The proposed envelope systems have been designed to meet the 2018 IECC requirements in COM*check* Version COMcheckWeb and to comply with any applicable mandatory requirements listed in the Inspection Checklist.

Name - Title Signature Date

tsk
225 South Arlington Avenue,
Suite A
Reno NV, 89501
phone: 775.857.2949
fax: 775.857.2403
www.tska.com

KOLBY M HARPSTEAD REGISTERED No. 8775 01/04/2024 ARCHITECT STATE OF NEVADA

THESE DRAWINGS AND SPECIFICATIONS ARE THE PROPERTY OF TATE SNYDER KIMSEY ARCHITECTS AND MAY NOT BE REPRODUCED OR USED FOR ANY PURPOSE WITHOUT THE ARCHITECTS WRITTEN CONSENT. AS INSTRUMENTS OF SERVICE, THESE DOCUMENTS ARE NOT FINAL AND READY FOR USE, AND THEREFORE NOT VALID, UNLESS THEY ARE SEALED, SIGNED AND DATED.
Copyright, Ltd 2024

Consultant

PLEASE RECYCLE

Project
SPARKS Fire Station #6

6963 SCHEIDBAR ROAD, SPARKS NEVADA 89436

Job No: 22-043

Owner
CITY OF SPARKS

BID SET

REVISIONS		
REV	DATE	DESCRIPTION
A	05.18.23	Review Comments

Sheet Title
IECC COMPLIANCE REPORT

Date: JANUARY 4, 2024
Sheet No:
G0.10

GENERAL ACCESSIBILITY DETAIL NOTES:
DETAILS ARE BASED ON:
- "Guidance on the 2010 ADA Standards for Accessibility Design"; Department of Justice, September 15, 2010
- "Standard for Accessible and Usable Buildings and Facilities"; ICC A117.1 - 2009

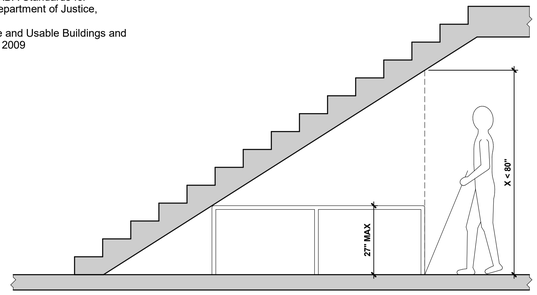

20 REDUCED VERTICAL CLEARANCE
SCALE: 1/2" = 1'-0"

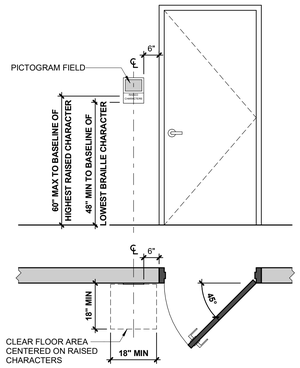

12 LOCATION OF SIGNS AT DOORS
SCALE: 1/2" = 1'-0"

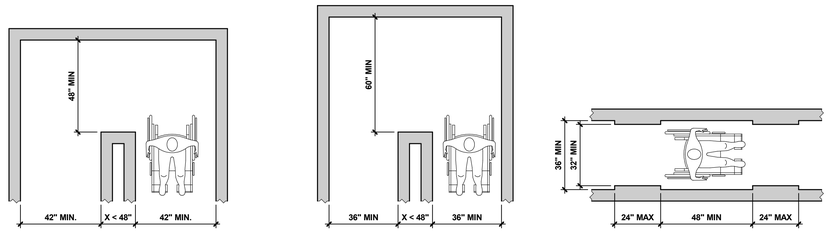

8 CLEAR WIDTH OF AN ACCESSIBLE ROUTE AND CLEAR WIDTH AT TURN
SCALE: 3/8" = 1'-0"

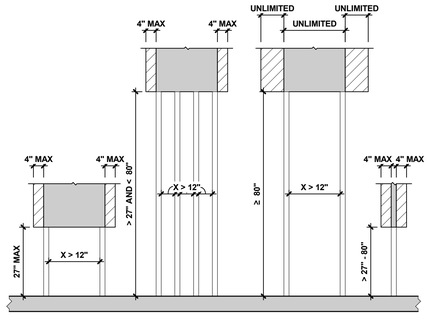

19 POST MOUNTED PROTRUDING OBJECTS
SCALE: 1/2" = 1'-0"

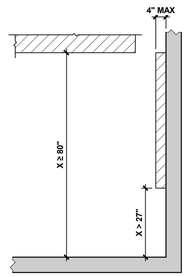

15 LIMITS OF PROTRUDING OBJECTS
SCALE: 1/2" = 1'-0"

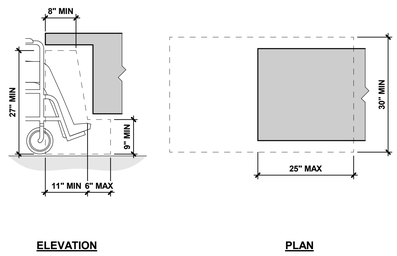

11 KNEE AND TOE CLEARANCE
SCALE: 3/4" = 1'-0"

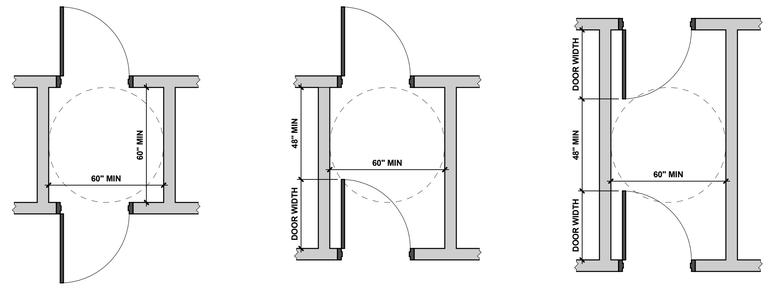

7 MANEUVERING CLEARANCE AT TWO DOORS IN SERIES
SCALE: 3/8" = 1'-0"

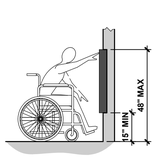

FORWARD REACH UNOBSTRUCTED

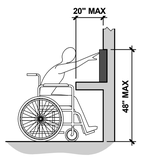

HIGH FORWARD REACH OBSTRUCTED (A)

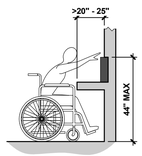

HIGH FORWARD REACH OBSTRUCTED (B)

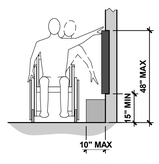

SIDE REACH UNOBSTRUCTED

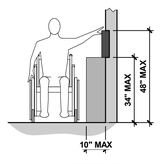

HIGH SIDE REACH OBSTRUCTED (A)

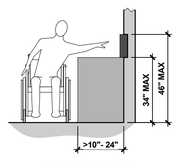

HIGH SIDE REACH OBSTRUCTED (B)

18 REACH RANGES
SCALE: 3/8" = 1'-0"

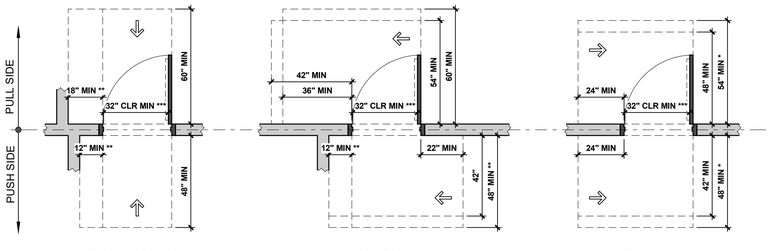

FRONT APPROACH

HINGE APPROACH

LATCH APPROACH

NOTES:
* IF CLOSER IS PROVIDED
** IF BOTH LATCH AND CLOSER ARE PROVIDED
*** CLEAR WIDTH SHALL COMPLY WITH LOCAL CODE AMENDMENT REQUIREMENTS

6 MANEUVERING CLEARANCE AT RECESSED DOORS
SCALE: 3/8" = 1'-0"

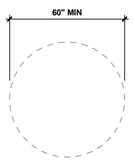

TURNING SPACE CIRCULAR

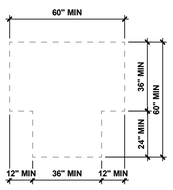

TURNING SPACE T-SHAPED

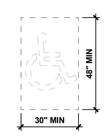

CLEAR FLOOR SPACE FOR WHEELCHAIR

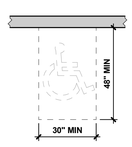

CLEAR FLOOR SPACE FORWARD APPROACH

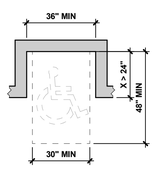

CLEAR FLOOR SPACE FORWARD APPROACH IN ALCOVE

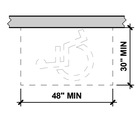

CLEAR FLOOR SPACE SIDE APPROACH

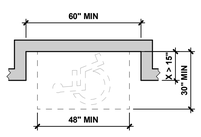

CLEAR FLOOR SPACE SIDE APPROACH IN ALCOVE

17 WHEELCHAIR TURNING SPACE
SCALE: 3/8" = 1'-0"

13 WHEELCHAIR CLEAR FLOOR SPACE
SCALE: 3/8" = 1'-0"

5 MANEUVERING CLEARANCE AT DOORS
SCALE: 3/8" = 1'-0"

tsk
225 South Arlington Avenue,
Suite A
Reno NV, 89501
phone: 775.857.2949
fax: 775.857.2403
www.tska.com

THESE DRAWINGS AND SPECIFICATIONS ARE THE PROPERTY OF TATE SNYDER KIMSEY ARCHITECTS AND MAY NOT BE REPRODUCED OR USED FOR ANY PURPOSE WITHOUT THE ARCHITECTS WRITTEN CONSENT. AS INSTRUMENTS OF SERVICE, THESE DOCUMENTS ARE NOT FINAL AND READY FOR USE, AND THEREFORE NOT VALID, UNLESS THEY ARE SEALED, SIGNED AND DATED.
Copyright, Ltd 2024

Consultant

PLEASE RECYCLE

Project
SPARKS Fire Station #6

6963 SCHEIDBAR ROAD, SPARKS NEVADA 89436

Job No: 22-043

Owner
CITY OF SPARKS

BID SET

REVISIONS		
REV	DATE	DESCRIPTION

Sheet Title
GENERAL ACCESSIBILITY DETAILS

Date: JANUARY 4, 2024
Sheet No:
G1.01

GENERAL ACCESSIBILITY DETAIL NOTES:
DETAILS ARE BASED ON:
- "Guidance on the 2010 ADA Standards for Accessibility Design"; Department of Justice, September 15, 2010
- "Standard for Accessible and Usable Buildings and Facilities"; ICC A117.1 - 2009

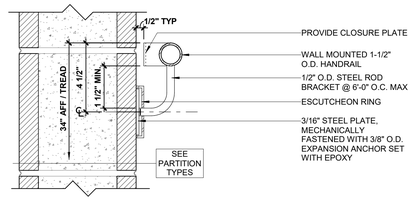

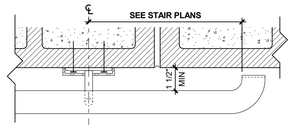

GENERAL NOTES:
1. ALL WELDS TO BE CONTINUOUS AND GROUND SMOOTH

12 WALL MOUNTED HANDRAIL - CMU WALL
SCALE: 3" = 1'-0"

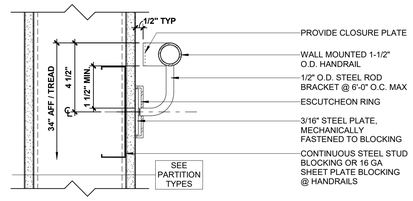

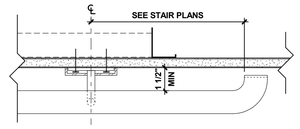

GENERAL NOTES:
1. ALL WELDS TO BE CONTINUOUS AND GROUND SMOOTH

8 WALL MOUNTED HANDRAIL - STUD WALL
SCALE: 3" = 1'-0"

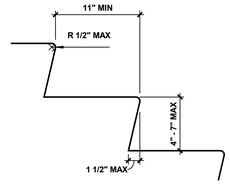

GENERAL NOTES:
1. ALL STEPS ON A FLIGHT OF STAIRS SHALL HAVE UNIFORM RISER HEIGHTS AND TREAD DEPTH
2. THE LEADING 2" OF TREAD SHALL HAVE VISUAL CONTRAST OF DARK-ON-LIGHT OR LIGHT-ON-DARK FROM THE REMAINDER OF THE TREAD

4 TREAD AND RISERS
SCALE: 1 1/2" = 1'-0"

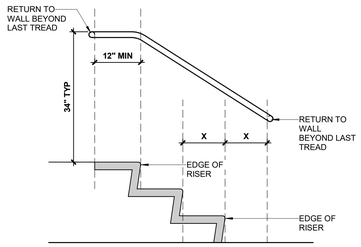

HANDRAIL EXTENSION AT STAIRS

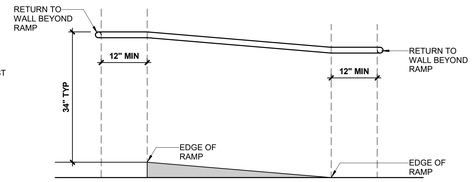

HANDRAIL EXTENSION AT RAMP

11 HANDRAIL EXTENSIONS
SCALE: 3/4" = 1'-0"

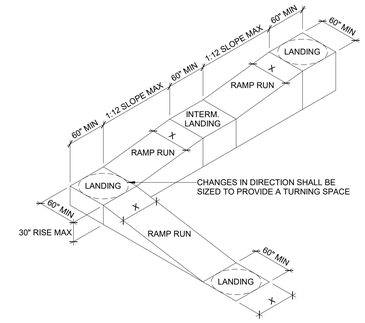

RAMP WITH TURNING PLATFORM

PERMITTED VERTICAL CHANGE

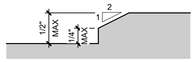

PERMITTED BEVELED CHANGE

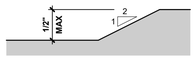

PERMITTED BEVELED CHANGE

10 CHANGES IN LEVEL
SCALE: 12" = 1'-0"

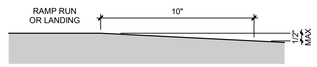

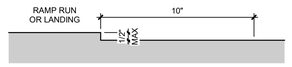

GENERAL NOTE:
1. EDGE PROTECTION SHALL NOT BE REQUIRED ON RAMPS OR LANDINGS HAVING A VERTICAL DROP-OFF OF 1/2" MAX WITHIN 10" HORIZONTALLY OF THE MINIMUM RAMP OR LANDING AREA.

6 RAMP EDGE PROTECTION EXCEPTION
SCALE: 3" = 1'-0"

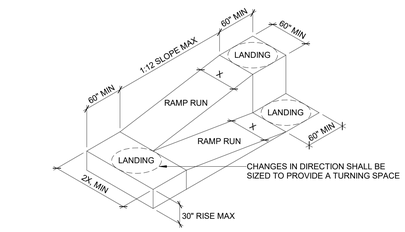

RAMP WITH INTERMEDIATE SWITCH-BACK PLATFORM

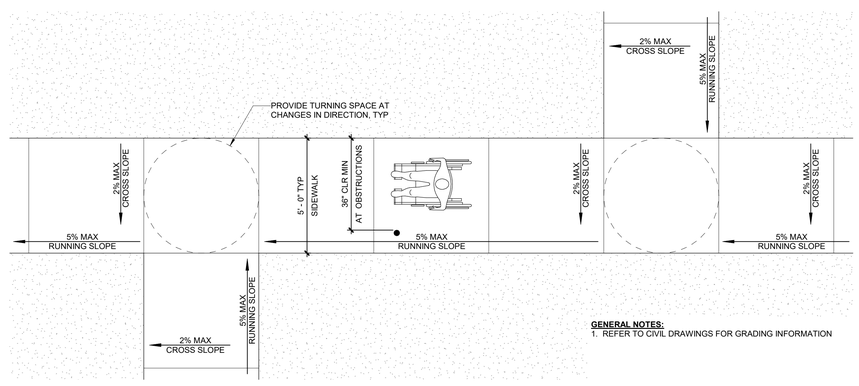

GENERAL NOTES:
1. REFER TO CIVIL DRAWINGS FOR GRADING INFORMATION

17 ACCESSIBLE ROUTE ON SITE
SCALE: 3/8" = 1'-0"

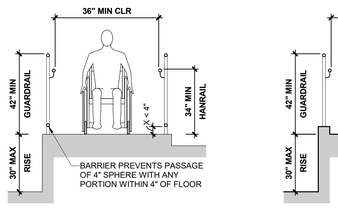

BARRIER EDGE PROTECTION

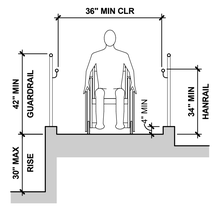

CURB EDGE PROTECTION

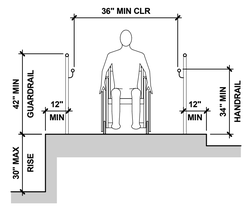

EXTENDED SURFACE EDGE PROTECTION

9 RAMP EDGE PROTECTION
SCALE: 3/8" = 1'-0"

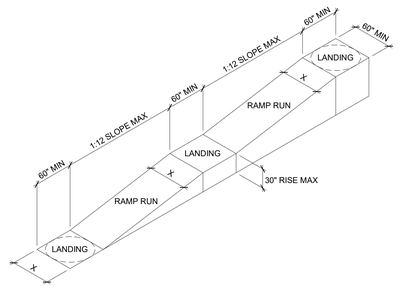

STRAIGHT RAMP

GENERAL NOTES:
1. ACCESSIBLE ROUTE WIDTH (SHOWN AS "X"), SHALL BE 36" MINIMUM
2. WHEN DOOR SWINGS ONTO LANDING, THE DOOR SWING SHALL NOT OVERLAP TURNING SPACE
3. RAMP RUNS WITH A RISE HIGHER THAN 6" SHALL HAVE HANDRAILS
4. EDGE PROTECTION SHALL BE PROVIDED ON EACH SIDE OF RAMP RUN AND LANDING

1 RAMP DETAILS
SCALE: 1/8" = 1'-0"

tsk
225 South Arlington Avenue,
Suite A
Reno NV, 89501
phone: 775.857.2949
fax: 775.857.2403
www.tska.com

THESE DRAWINGS AND SPECIFICATIONS ARE THE PROPERTY OF TATE SNYDER KIMSEY ARCHITECTS AND MAY NOT BE REPRODUCED OR USED FOR ANY PURPOSE WITHOUT THE ARCHITECTS WRITTEN CONSENT. AS INSTRUMENTS OF SERVICE, THESE DOCUMENTS ARE NOT FINAL AND READY FOR USE, AND THEREFORE NOT VALID, UNLESS THEY ARE SEALED, SIGNED AND DATED.

Copyright, Ltd 2024

Consultant

PLEASE RECYCLE

Project
SPARKS Fire Station #6

6963 SCHEIDBAR ROAD, SPARKS NEVADA 89436

Job No: 22-043

Owner
CITY OF SPARKS

BID SET

REVISIONS		
REV	DATE	DESCRIPTION

Sheet Title
GENERAL ACCESSIBILITY DETAILS

Date: JANUARY 4, 2024
Sheet No:
G1.02

DESIGN CRITERIA FOR ACCESSIBLE RESTROOMS

NOTE:
ALL HEIGHT DIMENSIONS ARE TO THE HIGHEST OPERATING CONTROL, INCLUDING COIN SLOT.
THIS INCLUDES ALL ACCESSORIES.

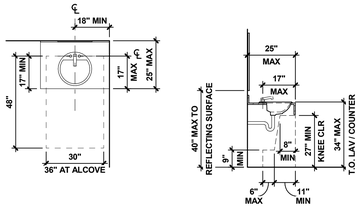

LAVATORY

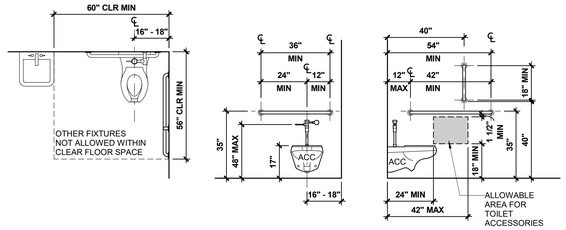

TOILET

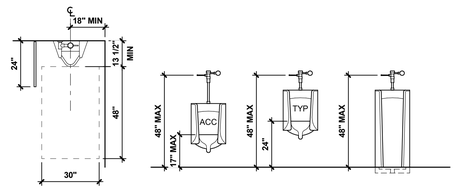

URINAL

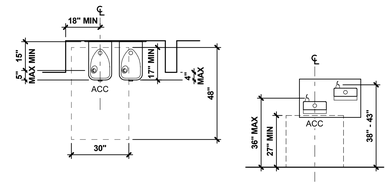

DRINKING FOUNTAIN

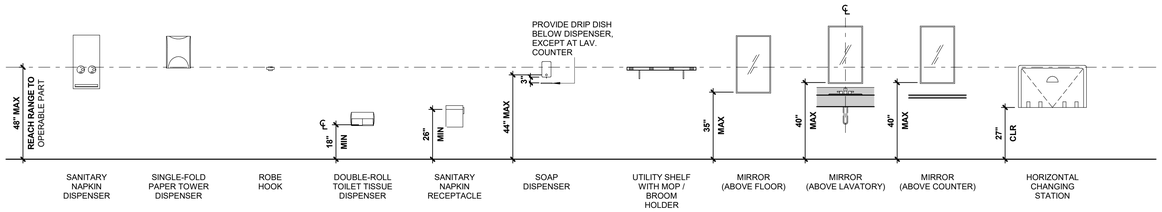

RESTROOM ACCESSORIES (ADULT)

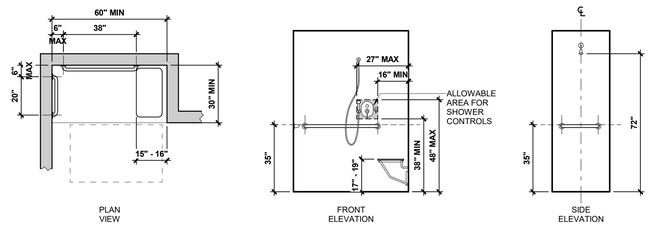

STANDARD ROLL-IN-TYPE SHOWER COMPARTMENT

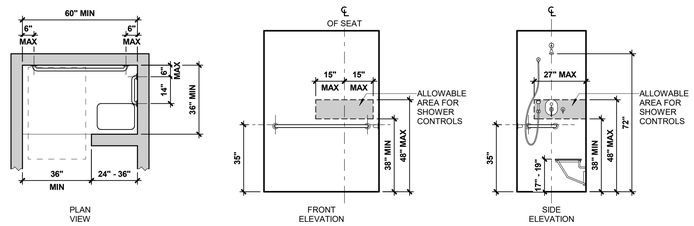

ALTERNATE ROLL-IN-TYPE SHOWER COMPARTMENT

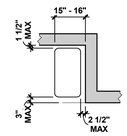

SHOWER COMPARTMENT SEAT

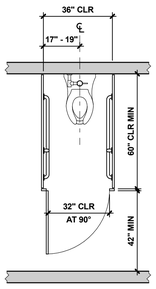

AMBULATORY STALL

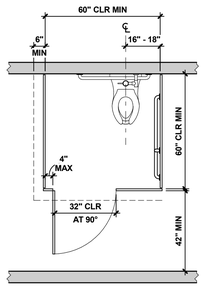

ACCESSIBLE STALL

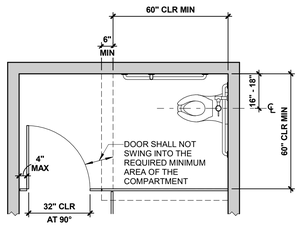

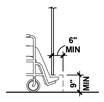

TOE CLEARANCE

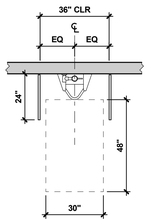

URINAL

18 TYPICAL FIXTURE AND ACCESSORY ELEVATIONS

SCALE: 3/8" = 1'-0"

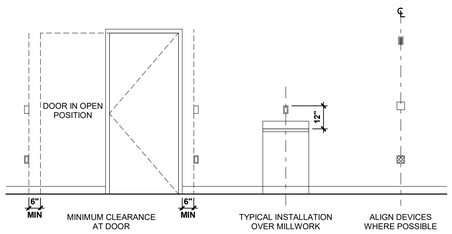

TYPICAL WALL MOUNTED DEVICE INSTALLATION

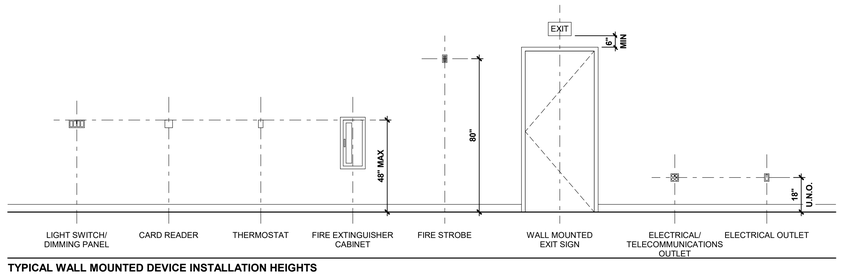

TYPICAL WALL MOUNTED DEVICE INSTALLATION HEIGHTS

17 WALL MOUNTED DEVICES - TYPICAL MOUNTING HEIGHTS

SCALE: 3/8" = 1'-0"

GENERAL ACCESSIBILITY DETAIL NOTES:

DETAILS ARE BASED ON:

- "Guidance on the 2010 ADA Standards for Accessibility Design"; Department of Justice, September 15, 2010
- "Standard for Accessible and Usable Buildings and Facilities"; ICC A117.1 - 2009

tsk

225 South Arlington Avenue,
Suite A
Reno NV, 89501
phone: 775.857.2949
fax: 775.857.2403
www.tska.com

KOLBY M HARPSTEAD REGISTERED No. 8775 01/04/2024 ARCHITECT STATE OF NEVADA

THESE DRAWINGS AND SPECIFICATIONS ARE THE PROPERTY OF TATE SNYDER KIMSEY ARCHITECTS AND MAY NOT BE REPRODUCED OR USED FOR ANY PURPOSE WITHOUT THE ARCHITECTS WRITTEN CONSENT. AS INSTRUMENTS OF SERVICE, THESE DOCUMENTS ARE NOT FINAL AND READY FOR USE, AND THEREFORE NOT VALID, UNLESS THEY ARE SEALED, SIGNED AND DATED.

Copyright, Ltd 2024

Consultant

PLEASE RECYCLE

Project

SPARKS Fire Station #6

6963 SCHEIDBAR ROAD, SPARKS NEVADA 89436

Job No: 22-043

Owner

CITY OF SPARKS

BID SET

REVISIONS		
REV	DATE	DESCRIPTION

Sheet Title

GENERAL ACCESSIBILITY DETAILS

Date: JANUARY 4, 2024

Sheet No:

G1.03

UL Product iQ™

BXUV.U415 - Fire-resistance Ratings - ANSI/UL 263

Design/System/Construction/Assembly Usage Disclaimer

- Authorities Having Jurisdiction should be consulted in all cases as to the particular requirements covering the installation and use of UL Certified products, equipment, system, devices, and materials.
- Authorities Having Jurisdiction should be consulted before construction.
- Fire resistance assemblies and products are developed by the design submitter and have been investigated by UL for compliance with applicable requirements. The published information cannot always address every construction nuance encountered in the field.
- When field issues arise, it is recommended the first contact for assistance be the technical service staff provided by the product manufacturer noted for the design. Users of fire resistance assemblies are advised to consult the general Guide Information for each product category and each group of assemblies. The Guide Information includes specifics concerning alternate materials and alternate methods of construction.
- Only products which bear UL's Mark are considered Certified.

BXUV - Fire Resistance Ratings - ANSI/UL 263 Certified for United States
BXUV7 - Fire Resistance Ratings - CAN/ULC-S101 Certified for Canada

See General Information for Fire-resistance Ratings - ANSI/UL 263 Certified for United States
Design Criteria and Allowable Variances

See General Information for Fire Resistance Ratings - CAN/ULC-S101 Certified for Canada
Design Criteria and Allowable Variances

Design No. U415

December 22, 2020

Nonbearing Wall Ratings — 1, 2, 3 or 4 Hr

*** Indicates such products shall bear the UL or cUL Certification Mark for jurisdictions employing the UL or cUL Certification (such as Canada), respectively.**

System A – 1 Hr.

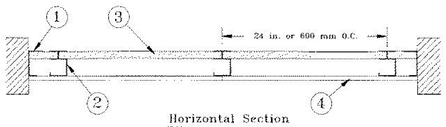

Horizontal Section

System B – 2 Hr.

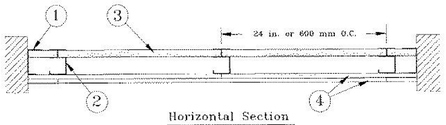

Horizontal Section

System C – 2 Hr.

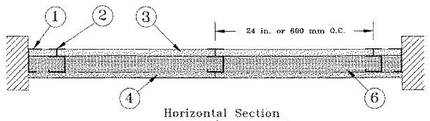

Horizontal Section

System D – 2 Hr.

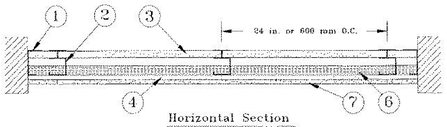

Horizontal Section

System E – 2 Hr.

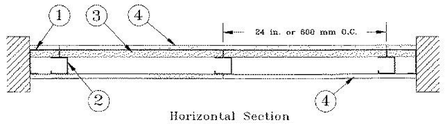

Horizontal Section

Horizontal Section

System I – 4 Hr.

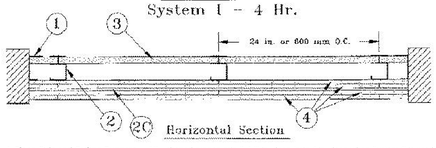

Horizontal Section

1. **Floor, Side and Ceiling Runners —** "J" - shaped runner, min 2-1/2 in. deep (min 4 in. deep when System C is used), with unequal legs of 1 in. and 2 in., fabricated from min 24 MSG (min 20 MSG when Item 4A, 4B, 4C, 4D or 7 are used) galv steel. Runners positioned with short leg toward finished side of wall. Runners attached to structural supports with steel fasteners located not greater than 2 in. from ends and not greater than 24 in. OC. "E" - shaped studs (Item 2A) may be used as side runners in place of "J" - shaped runners.

2. **Steel Studs —** "C-H" - shaped studs, min 2-1/2 in. deep (min 4 in. deep when System C is used), fabricated from min 25 MSG (min 20 MSG when Items 2D, 4A, 4B, 4C, 4D or 7 is used) galv steel. Cut to lengths 3/8 to 1/2 in. less than floor-to-ceiling height and spaced 24 in. or 600 mm OC (max 16 in. OC when Items 4A, 4B, 4C, or 4D are used).

2A. **Steel Studs —** (Not Shown) — "E" - shaped studs installed back to back in place of "C-H" - shaped studs (Item 2) "E" - shaped studs secured together with steel screws spaced a maximum 12 in. OC. Fabricated from min 25 MSG (min 20 MSG when Item 2D, 4A, 4B or 7 is used) galv steel, min 2-1/2 in. deep (min 4 in. deep when System C is used), with one leg 1 in. long and two legs 3/4 in. long. Shorter legs 1 in. apart to engage gypsum liner panels. Cut to lengths 3/8 to 1/2 in. less than floor to ceiling heights.

2B. **Furring Channels —** (Optional, Not Shown) — For use with single or double layer systems. Resilient furring channels fabricated from min 25MSG corrosion protected steel, installed horizontally, and spaced vertically a max 24 in. OC. Flange portion of channel attached to each intersecting "C-H" or "E" stud on side of stud opposite the 1 in. liner panels with 1/2 in. long Type S or S-12 pan-head steel screws. When furring channels are used, wallboard to be installed vertically only. . Not to be used with Type FRX-G gypsum board, lead backed gypsum boards (Items 4A-4D), or cementitious backer units (Item 7).

2C. **Furring Channels —** For use with System I - "Hat" - shaped, 25 MSG galv steel furring channels attached directly over the inner layers of wallboard to each stud with 2 in. long Type S pan head steel screws. Screws alternate from top flange to bottom flange at each stud intersection. Furring channels spaced vertically max 24 in. OC.

2D. **Steel Framing Members* —** (Optional, Not Shown) — For use with single or double layer systems. Furring channels and Steel Framing Members as described below. Not to be used with Type FRX-G gypsum board, lead backed gypsum boards (Items 4A-4D), or cementitious backer units (Item 7).

a. **Furring Channels —** Formed of No. 25 MSG galv steel. 2-9/16 in. or 2-23/32 in. wide by 7/8 in. deep, spaced max. 24 in. OC perpendicular to studs. Channels secured to studs as described in Item b. Gypsum board installed vertically only and attached to furring channels as described in Item 4.

b. **Steel Framing Members* —** Used to attach furring channels (Item 2Da) to studs (Item 2 or 2A). Clips spaced max. 24 in. OC., and secured to studs with No. 8 x 1-1/2 in. minimum self-drilling, S-12 steel screw through the center grommet. Furring channels are friction fitted into clips. RSIC-1 clip for use with 2-9/16 in. wide furring channels. RSIC-1 (2.75) clip for use with 2-23/32 in. wide furring channels.
PAC INTERNATIONAL L L C — Types RSIC-1, RSIC-1 (2.75)

2E. **Steel Framing Members* —** (Optional, Not Shown) — Furring channels and Steel Framing Members as described below. . Not to be used with Type FRX-G gypsum board, lead backed gypsum boards (Items 4A-4D), or cementitious backer units (Item 7).

a. **Furring Channels —** Formed of No. 25 MSG galv steel. Spaced 24 in. OC perpendicular to studs. Channels secured to studs as described in Item b. Ends of adjoining channels overlapped 6 in. and tied together with double strand of No. 18 AWG galvanized steel wire.Gypsum board attached to furring channels as described in Item 4.

b. **Steel Framing Members* —** Used to attach furring channels (Item 2Ea) to studs. Clips spaced 24 in. OC., and secured to studs with 2 in. coarse drywall screw with 1 in. diam washer through the center hole. Furring channels are friction fitted into clips.
STUDCO BUILDING SYSTEMS — RESILMOUNT Sound Isolation Clips - Type A237R

2F. **Steel Framing Members* —** (Optional, Not Shown) — For use with single or double layer systems. Furring channels and Steel Framing Members as described below. Not to be used with Type FRX-G gypsum board, lead backed gypsum boards (Items 4A-4D), or cementitious backer units (Item 7).

a. **Furring Channels —** Formed of No. 25 MSG galv steel. 2-3/8 in. wide by 7/8 in. deep, spaced max. 24 in. OC perpendicular to studs. Channels secured to studs as described in Item b. Gypsum board installed vertically only and attached to furring channels as described in Item 3.

b. **Steel Framing Members* —** Used to attach furring channels (Item 2Da) to studs (Item 2 or 2A). Clips spaced max. 24 in. OC. GENIECLIPS secured to studs with No. 8 x 1-1/2 in. minimum self-drilling, S-12 steel screw through the center grommet. Furring channels are friction fitted into clips.
PLITEQ INC — Type GENIECLIP

2G. **Steel Framing Members* —** (Optional, Not Shown) — Furring channels and Steel Framing Members as described below. Not to be used with Type FRX-G gypsum board, lead backed gypsum boards (Items 4A-4D), or cementitious backer units (Item 7).

a. **Furring Channels —** Formed of No. 25 MSG galv steel. Spaced 24 in. OC perpendicular to studs. Channels secured to studs as described in Item 2Gb. Ends of adjoining channels overlapped 6 in. and tied together with double strand of No. 18 AWG galvanized steel wire. Gypsum board attached to furring channels as described in Item 4.

b. **Steel Framing Members* —** Used to attach furring channels (Item 2Ga) to studs. Clips spaced 24 in. OC., and secured to studs with No. 8 x 2-1/2 in. coarse drywall screw through the center hole. Furring channels are friction fitted into clips.
REGUPOL AMERICA — Type SonusClip

2H. **Steel Framing Members* —** (Optional, Not Shown) — Resilient channels and Steel Framing Members as described below. Not to be used with Type FRX-G gypsum board, lead backed gypsum boards (Items 4A-4D), or cementitious backer units (Item 7).

a. **Resilient Channels —** Formed of No. 25 MSG galv steel, spaced 24 in. OC, and perpendicular to studs. Channels secured to studs as described in Item b. Ends of adjoining channels overlapped 6 in. and secured in place with two No. 8 15 x 1/2 in. Philips Modified Truss screws spaced 2-1/2 in. from the center of the overlap. Gypsum board attached to resilient channels as described in Item 4.

b. **Steel Framing Members* —** Used to attach resilient channels (Item 2Ha) to studs. Clips spaced 48 in. OC., and secured to studs with No. 8 x 2-1/2 in. coarse drywall screw through the center hole. Resilient channels are secured to clips with one No. 10 x 1/2 in. pan-head self-drilling screw.
KEENE BUILDING PRODUCTS CO INC — Type RC+ Assurance Clip

2I. **Steel Framing Members* —** (Optional, Not Shown) — For use with single or double layer systems. Furring channels and Steel Framing Members as described below. Not to be used with Type FRX-G gypsum board, lead backed gypsum boards (Items 4A-4D), or cementitious backer units (Item 7).

a. **Furring Channels —** Formed of No. 25 MSG galv steel. 2-23/32 in. wide by 7/8 in. or 1-1/2 in. deep, spaced max. 24 in. OC perpendicular to studs. Channels secured to studs as described in Item b. Gypsum board installed vertically only and attached to furring channels as described in Item 4.

b. **Steel Framing Members* —** Used to attach furring channels (Item 2Ia) to studs (Item 2 or 2A). Clips spaced max. 24 in. OC., and secured to studs with No. 8 x 1-1/2 in. minimum self-drilling, S-12 steel screw through the center grommet. Furring channels are friction fitted into clips.
CLARKDIETRICH BUILDING SYSTEMS — Type ClarkDietrich Sound Clip

3. **Gypsum Board* —** Gypsum liner panels, nom 1 in. thick, 24 in. or 600 mm (for metric spacing) wide. Panels cut 1 in. less in length than floor to ceiling height. Vertical edges inserted in "H" portion of "C-H" studs or the gap between the two 3/4 in. legs of the "E" studs. Free edge of end panels attached to long leg of vertical "J" - runners with 1-5/8 in. long Type S steel screws spaced not greater than 12 in. OC. When wall height exceeds liner panel length, liner panel may be butted to extend to the full height of the wall. Horizontal joints need not be backed by steel framing. In System I, butt joints in liner panels are staggered min 36 in. Butt joints backed with 6 in. by 22 in. strips of 3/4 in. thick gypsum wallboard (Item 4). Wallboard strips centered over butt joints and secured to liner panels with six 1-1/2 in. long Type G steel screws, three screws along the 22 in. dimension at the top and bottom of the strips.
CGC INC — Type SLX

UNITED STATES GYPSUM CO — Type SLX

USG BORAL DRYWALL SFZ LLC — Type SLX

USG MEXICO S A DE C V — Type SLX

4. **Gypsum Board* —**

System A — 1 Hr

Gypsum panels, with beveled, square or tapered edges, nom 5/8 in. thick, 48 in. or 1200 mm wide, applied vertically or horizontally, attached to studs with 1 in. long Type S steel screws spaced 12 in. when installed vertically or 8 in OC when installed horizontally. Horizontal joints need not be backed by steel framing.

CGC INC — Types AR, C, IP-AR, IP-X1, IP-X2, IPC-AR, SCX, SHX, ULIX, ULX, USGX, WRC, WRX

THE SIAM GYPSUM INDUSTRY (SONGKHLA) CO — Types C and SCX

UNITED STATES GYPSUM CO — Types AR, C, FRX-G, IP-AR, IP-X1, IP-X2, IPC-AR, SCX, SGX, SHX, ULIX, ULX, WRC, WRX, USGX.

USG BORAL DRYWALL SFZ LLC — Types C, SCX, SGX, USGX

USG MEXICO S A DE C V — Types AR, C, IP-AR, IP-X1, IP-X2, IPC-AR, SCX, SHX, ULX, USGX, WRC, WRX

System B — 2 Hr

Gypsum panels, with beveled, square or tapered edges, nom 1/2 in. or 5/8 in. thick, 48 in. or 1200 mm wide, applied vertically or horizontally in two layers. Inner or base layer attached to studs with 1 in. long Type S steel screws spaced 24 in. OC when installed vertically or 16 in. OC when installed horizontally. Outer or face layer attached to studs with 1-5/8 in. long Type S steel screws spaced 12 in. OC when installed vertically and staggered 12 in. from base layer screws or 8 in. OC when installed horizontally and staggered 8 in. from base layer screws. Horizontal joints between inner and outer layers staggered a min of 12 in. Horizontal joints need not be backed by steel framing. Vertical joints centered over studs and staggered 24 in.

CGC INC — 1/2 in. Type C, IP-X2, IPC-AR or WRC; 5/8 in. Types AR, C, IP-AR, IP-X1, IP-X2, IPC-AR, SCX, SHX, ULX, USGX, WRC, WRX

THE SIAM GYPSUM INDUSTRY (SONGKHLA) CO — Types C and SCX

UNITED STATES GYPSUM CO — 1/2 in. Types C, IP-X2, IPC-AR, or WRC; 5/8 in. Types AR, C, FRX-G, IP-AR, IP-X1, IP-X2, IPC-AR, SCX, SGX, SHX, ULIX, ULX, USGX, WRC, WRX.

USG BORAL DRYWALL SFZ LLC — 1/2 in. Type C; 5/8 in. Types C, SCX, SGX, USGX

USG MEXICO S A DE C V — 1/2 in. Types C, IP-X2, IPC-AR or WRC; 5/8 in. Types AR, C, IP-AR, IP-X1, IP-X2, IPC-AR, SCX, SHX, ULX, USGX, WRC, WRX

System C — 2 Hr

Gypsum panels, with beveled, square or tapered edges, nom 3/4 in. thick, 48 in. or 1200 mm wide, applied vertically or horizontally, secured with 1-1/4 in. long Type S steel screws spaced 8 in. OC along vertical edges and 12 in. OC in the field when installed vertically or 8 in. OC along the vertical edges and in the field when installed horizontally. Horizontal joints need not be backed by steel framing. Screws along side joints offset 4 in. Requires min 4 in. deep framing per Items 1, 2 and 3. Requires min 3 in. thick mineral wool batts per Item 6.

CGC INC — Types IP-X3 or ULTRACODE

UNITED STATES GYPSUM CO — Types IP-X3 or ULTRACODE

USG BORAL DRYWALL SFZ LLC — Type ULTRACODE

USG MEXICO S A DE C V — Types IP-X3 or ULTRACODE

System D — 2 Hr

Gypsum panels, with beveled, square or tapered edges, nom 5/8 in. thick, 48 in. or 1200 mm wide, applied vertically or horizontally, attached directly to studs with 1 in. long Type S steel screws spaced 24 in. when installed vertically or 16 in. OC when installed horizontally. Horizontal joints need not be backed by steel framing. Requires face layer of 1/2 or 5/8 in. thick cementitious backer units per Item 7 and min 1-1/2 in. thick mineral wool batts per Item 6.

CGC INC — Types AR, C, IP-AR, IP-X1, IP-X2, IPC-AR, SCX, SHX, ULX, USGX, WRC, WRX

THE SIAM GYPSUM INDUSTRY (SONGKHLA) CO — Types C and SCX

UNITED STATES GYPSUM CO — Types AR, C, FRX-G, IP-AR, IP-X1, IP-X2, IPC-AR, SCX, SGX, SHX, ULIX, ULX, USGX, WRC, WRX.

USG BORAL DRYWALL SFZ LLC — Types C, SCX, SGX, USGX

USG MEXICO S A DE C V — Types AR, C, IP-AR, IP-X1, IP-X2, IPC-AR, SCX, SHX, ULX, USGX, WRC, WRX

System E — 2 Hr

Gypsum panels, with beveled, square or tapered edges, nom 1/2 in. or 5/8 in. thick, 48 in. or 1200 mm wide, applied vertically or horizontally, attached to studs with 1 in. long Type S steel screws spaced 12 in. OC when installed vertically or 8 in. when installed horizontally. Horizontal joints need not be backed by steel framing.

CGC INC — 1/2 in. Types C, IP-X2, IPC-AR; 5/8 in. Types AR, C, IP-AR, IP-X1, IP-X2, IPC-AR, SCX, SHX, ULX, USGX, WRC, WRX

THE SIAM GYPSUM INDUSTRY (SONGKHLA) CO — Types C and SCX

UNITED STATES GYPSUM CO — 1/2 in. Types C, IP-X2, IPC-AR; 5/8 in. Types AR, C, FRX-G, IP-AR, IP-X1, IP-X2, IPC-AR, SCX, SGX, SHX, ULIX, ULX, USGX, WRC, WRX.

USG BORAL DRYWALL SFZ LLC — 1/2 in. Type C; 5/8 in. Types C, SCX, SGX, USGX

USG MEXICO S A DE C V — 1/2 in. Types C, IP-X2, IPC-AR; 5/8 in. Types AR, C, IP-AR, IP-X1, IP-X2, IPC-AR, SCX, SHX, ULX, USGX, WRC, WRX

System F — 2 Hr

Gypsum panels, with beveled, square or tapered edges, nom 1/2 in. or 5/8 in. thick, 48 in. or 1200 mm wide, applied vertically in two layers. Inner or base layer attached to resilient furring channels (Item 2B) with 1 in. long Type S steel screws spaced 24 in. Outer or face layer attached to resilient furring channels (Item 2B) with 1-5/8 in. long Type S steel screws spaced 12 in. OC and staggered 12 in. from base layer screws. Joints between inner and outer layers staggered 24 in.

CGC INC — 1/2 in. Type C, IP-X2, IPC-AR or WRC; 5/8 in. Types AR, C, FRX-G, IP-AR, IP-X1, IP-X2, IPC-AR, SCX, SHX, ULX, USGX, WRC, WRX

THE SIAM GYPSUM INDUSTRY (SONGKHLA) CO — Types C and SCX

UNITED STATES GYPSUM CO — 1/2 in. Type C, IP-X2, IPC-AR or WRC; 5/8 in. Types AR, C, FRX-G, IP-AR, IP-X1, IP-X2, IPC-AR, SCX, SGX, SHX, ULIX, ULX, USGX, WRC, WRX.

USG BORAL DRYWALL SFZ LLC — 1/2 in. Type C; 5/8 in. Types C, SCX

USG MEXICO S A DE C V — 1/2 in. Types C, IP-X2, IPC-AR or WRC; 5/8 in. Types AR, C, IP-AR, IP-X1, IP-X2, IPC-AR, SCX, SHX, ULX, USGX, WRC, WRX

tsk
225 South Arlington Avenue,
Suite A
Reno NV, 89501
phone: 775.857.2949
fax: 775.857.2403
www.tska.com

NOLBY M HARPSTEAD
REGISTERED
No. 8775
01/04/2024
ARCHITECT
STATE OF NEVADA

THESE DRAWINGS AND SPECIFICATIONS ARE THE PROPERTY OF TATE SNYDER KIMSEY ARCHITECTS AND MAY NOT BE REPRODUCED OR USED FOR ANY PURPOSE WITHOUT THE ARCHITECTS WRITTEN CONSENT. AS INSTRUMENTS OF SERVICE, THESE DOCUMENTS ARE NOT FINAL AND READY FOR USE, AND THEREFORE NOT VALID, UNLESS THEY ARE SEALED, SIGNED AND DATED.

Copyright, Ltd 2024

Consultant

PLEASE RECYCLE

Project
SPARKS Fire Station #6

6963 SCHEIDBAR ROAD, SPARKS NEVADA 89436

Job No: 22-043

Owner
CITY OF SPARKS

CITY OF SPARKS FIRE DEPARTMENT Est. 1905

BID SET

REVISIONS		
REV	DATE	DESCRIPTION

Sheet Title
LIFE SAFETY FIRE RESISTIVE LISTINGS

Date: JANUARY 4, 2024
Sheet No:
G1.11

UL Product iQ™

BXUV.U419

Design/System/Construction/Assembly Usage Disclaimer

- Authorities Having Jurisdiction should be consulted in all cases as to the particular requirements covering the installation and use of UL Certified products, equipment, system, devices, and materials.
- Authorities Having Jurisdiction should be consulted before construction.
- Fire resistance assemblies and products are developed by the design submitter and have been investigated by UL for compliance with applicable requirements. The published information cannot always address every construction nuance encountered in the field.
- When field issues arise, it is recommended the first contact for assistance be the technical service staff provided by the product manufacturer noted for the design. Users of fire resistance assemblies are advised to consult the general Guide Information for each product category and each group of assemblies. The Guide Information includes specifics concerning alternate materials and alternate methods of construction.
- Only products which bear UL's Mark are considered Certified.

BXUV - Fire Resistance Ratings - ANSI/UL 263 Certified for United States
BXUV7 - Fire Resistance Ratings - CAN/ULC-S101 Certified for Canada

See General Information for Fire-resistance Ratings - ANSI/UL 263 Certified for United States
Design Criteria and Allowable Variances

See General Information for Fire Resistance Ratings - CAN/ULC-S101 Certified for Canada
Design Criteria and Allowable Variances

Design No. U419

July 31, 2021

Nonbearing Wall Ratings — 1, 2, 3 or 4 Hr (See Items 4 & 5 through 5J)
*** Indicates such products shall bear the UL or cUL Certification Mark for jurisdictions employing the UL or cUL Certification (such as Canada), respectively.**

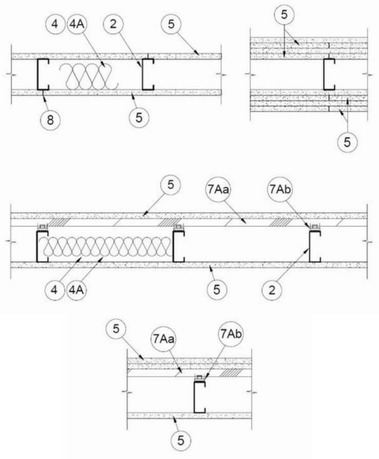

1. **Floor and Ceiling Runners —** (Not Shown) — For use with Item 2 — Channel shaped, fabricated from min 25 MSG corrosion-protected steel, min depth to accommodate stud size, with min 1-1/4 in. long legs, attached to floor and ceiling with fasteners 24 in. OC max.

1A. **Framing Members* — Floor and Ceiling Runner —** Not Shown — In lieu of Item 1 — For use with Item 2B, proprietary channel shaped runners, 3-5/8 in. deep attached to floor and ceiling with fasteners 24 in. OC max.
CALIFORNIA EXPANDED METAL PRODUCTS CO — Viper25™ Track

CRACO MFG INC — SmartTrack25™

MARINO/WARE, DIV OF WARE INDUSTRIES INC — Viper25™ Track
FUSION BUILDING PRODUCTS — Viper25™ Track

IMPERIAL MANUFACTURING GROUP INC — Viper25™ Track

1B. **Framing Members* — Floor and Ceiling Runner —** Not Shown — In lieu of Item 1 — For use with Item 2C, proprietary channel shaped runners, 1-1/4 in. wide by 3-5/8 in. deep fabricated from min 0.018 in. thick galv steel, attached to floor and ceiling with fasteners spaced 24 in. OC max.
CALIFORNIA EXPANDED METAL PRODUCTS CO — Viper20™ Track

MARINO/WARE, DIV OF WARE INDUSTRIES INC — Viper20™ Track

FUSION BUILDING PRODUCTS — Viper20™ Track

IMPERIAL MANUFACTURING GROUP INC — Viper20™ Track

1C. **Framing Members* — Floor and Ceiling Runners —** (Not Shown) — In lieu of Item 1 — Channel shaped, attached to floor and ceiling with fasteners 24 in. OC. max.
ALLSTEEL & GYPSUM PRODUCTS INC — Type SUPREME D24/30EQD and Type SUPREME D20

CONSOLIDATED FABRICATORS CORP, BUILDING PRODUCTS DIV — Type SUPREME D24/30EQD and Type SUPREME D20

QUAIL RUN BUILDING MATERIALS INC — Type SUPREME D24/30EQD and Type SUPREME D20

SCAFCO STEEL STUD MANUFACTURING CO — Type SUPREME D24/30EQD and Type SUPREME D20

STEEL CONSTRUCTION SYSTEMS INC — Type SUPREME D24/30EQD and Type SUPREME D20

TELLING INDUSTRIES L L C — Type SUPREME D24/30EQD and Type SUPREME D20

UNITED METAL PRODUCTS INC — Type SUPREME D24/30EQD and Type SUPREME D20

1D. **Floor and Ceiling Runners —** (Not Shown) — For use with Item 2A — Channel shaped, fabricated from min 20 MSG corrosion-protected or galv steel, min depth to accommodate stud size, with min 1 in. long legs, attached to floor and ceiling with fasteners spaced max 24 in. OC.

1E. **Framing Members* — Floor and Ceiling Runners —** (Not Shown, As an alternate to Item 1) — For use with Items 2E, 5F or 5G or 5I only, channel shaped, fabricated from min. 0.015 in. (min bare metal thickness) galvanized steel, attached to floor and ceiling with fasteners 24 in. OC. max.
CLARKDETRICH BUILDING SYSTEMS — CD ProTRAK

DMFCWBS L L L C — ProTRAK

MBA METAL FRAMING — ProTRAK

RAM SALES L L C — Ram ProTRAK

STEEL STRUCTURAL PRODUCTS L L C — Tri-S ProTRAK

1F. **Framing Members* — Floor and Ceiling Runner —** Not Shown — In lieu of Item 1 — For use with Item 2F, proprietary channel shaped runners, minimum width to accommodate stud size, with 1- 1/8 in. long legs fabricated from min 0.015 in. (min bare metal thickness) galv steel, attached to floor and ceiling with fasteners spaced 24 in. OC max.
SUPER STUD BUILDING PRODUCTS — The Edge

1G. **Framing Members* — Floor and Ceiling Runner —** For use with Item 2G, proprietary channel shaped runners, minimum width to accommodate stud size attached to floor and ceiling with fasteners 24 in. OC max.
STUDCO BUILDING SYSTEMS — CROCSTUD Track

1H. **Floor and Ceiling Runners —** (Not Shown) — Channel shaped, fabricated from min 0.02 in. galv steel, min width to accommodate stud size, with min 1 in. long legs, for use with studs specified below and fabricated from min 0.018 in. galv steel or thicker, attached to floor and ceiling with fasteners spaced max 24 in. OC.
MARINO/WARE, DIV OF WARE INDUSTRIES INC — Viper20™ Track VT100

FUSION BUILDING PRODUCTS — Viper20™ Track VT100

IMPERIAL MANUFACTURING GROUP INC — Viper20™ Track VT100

1I. **Framing Members* — Floor and Ceiling Runners —** (Not Shown, As an alternate to Item 1) — For use with Items 2H, channel shaped, fabricated from min. 0.015 in. (min bare metal thickness) galvanized steel, attached to floor and ceiling with fasteners 24 in. OC. max.
TELLING INDUSTRIES L L C — TRUE-TRACK™

1J. **Framing Members* — Floor and Ceiling Runner —** Not Shown — In lieu of Item 1 — For use with Item 2I, proprietary channel shaped runners, 3-5/8 in. deep attached to floor and ceiling with fasteners 24 in. OC max.

1K. **Framing Members* — Floor and Ceiling Runner —** Not Shown — In lieu of Item 1 — For use with Item 2J, proprietary channel shaped runners, 1-1/4 in. wide by 3-5/8 in. deep fabricated from min 0.018 in. thick galv steel, attached to floor and ceiling with fasteners spaced 24 in. OC max.

1L. **Framing Members* — Floor and Ceiling Runner —** Not Shown — In lieu of Item 1 — For use with Item 2N, proprietary channel shaped runners, 1-1/4 in. wide by min. 3-1/2 in. deep fabricated from min 0.018 in. thick galv steel, attached to floor and ceiling with fasteners spaced 24 in. OC max.
RESCUE METAL FRAMING, L L C — AlphaTRAK

1M. **Framing Members* — Floor and Ceiling Runners —** Not Shown — As an alternate to Item 1 — For use with Item 2O, proprietary channel shaped runners, min width to accommodate stud size, galv steel, attached to floor and ceiling with fasteners spaced 24 in. OC max.
RONDO BUILDING SERVICES PTY LTD — Rondo Wall Track

1N. **Framing Members* — Floor and Ceiling Runners —** Not Shown — As an alternate to Item 1 — For use with Item 2P, proprietary channel shaped runners, min width to accommodate stud size, galv steel, attached to floor and ceiling with fasteners spaced 24 in. OC max.
OEG BUILDING MATERIALS — OEG Track

1O. **Framing Members* — Floor and Ceiling Runner —** Not Shown — In lieu of Item 1 — For use with Item 2Q, proprietary channel shaped runners, min width to accommodate stud size, fabricated from min. 25 MSG (0.018 in. min. bare metal thickness), attached to floor and ceiling with fasteners spaced 24 in. OC max.
CALIFORNIA EXPANDED METAL PRODUCTS CO — Viper X Track

2. **Steel Studs —** Channel shaped, fabricated from min 25 MSG corrosion-protected steel, min depth as indicated under Item 5, spaced a max of 24 in. OC. Studs to be cut 3/8 in. 3/4 in. less than assembly height.

2A. **Steel Studs —** (As an alternate to Item 2, For use with Items 5B, 5E, 5H, 5J or Type ULIX) **—** Channel shaped, fabricated from min 20 MSG corrosion-protected or galv steel, 3-1/2 in. min depth, spaced a max of 16 in. OC. Studs friction-fit into floor and ceiling runners. Studs to be cut 5/8 to 3/4 in. less than assembly height.

2B. **Framing Members* - Steel Studs —** (As an alternate to Item 2, For use with Items 5C, 5I or Type ULIX) **—** Proprietary channel shaped studs, 3-5/8 in. deep spaced a max of 24 in. OC. Studs to be cut 3/4 in less than the assembly height and installed with a 1/2 in. gap between the end of the stud and track at the bottom of the wall. For direct attachment of gypsum board only.
CALIFORNIA EXPANDED METAL PRODUCTS CO — Viper25™

CRACO MFG INC — SmartStud25™

MARINO/WARE, DIV OF WARE INDUSTRIES INC — Viper25™

FUSION BUILDING PRODUCTS — Viper25™

IMPERIAL MANUFACTURING GROUP INC — Viper25™

2C. **Framing Members* — Steel Studs —** Not Shown **—** In lieu of Item 2 **—** proprietary channel shaped steel studs, min depth as indicated under Item 5, spaced a max if 24 in. OC, fabricated from min 0.018 in. thick galv steel. Studs cut 3/8 in. to 3/4 in. less in lengths than assembly heights.
CALIFORNIA EXPANDED METAL PRODUCTS CO — Viper20™

MARINO/WARE, DIV OF WARE INDUSTRIES INC — Viper20™

FUSION BUILDING PRODUCTS — Viper20™

IMPERIAL MANUFACTURING GROUP INC — Viper20™

2D. **Framing Members* — Steel Studs —** In lieu of Item 2 **—** Channel shaped studs, min depth as indicated under Item 5, spaced a max of 24 in. OC. Studs to be cut 3/4 in. less than assembly height.
ALLSTEEL & GYPSUM PRODUCTS INC — Type SUPREME D24/30EQD and Type SUPREME D20

CONSOLIDATED FABRICATORS CORP, BUILDING PRODUCTS DIV — Type SUPREME D24/30EQD and Type SUPREME D20

QUAIL RUN BUILDING MATERIALS INC — Type SUPREME D24/30EQD and Type SUPREME D20

SCAFCO STEEL STUD MANUFACTURING CO — Type SUPREME D24/30EQD and Type SUPREME D20

STEEL CONSTRUCTION SYSTEMS INC — Type SUPREME D24/30EQD and Type SUPREME D20

TELLING INDUSTRIES L L C — Type SUPREME D24/30EQD and Type SUPREME D20

UNITED METAL PRODUCTS INC — Type SUPREME D24/30EQD and Type SUPREME D20

2E. **Framing Members* — Steel Studs —** (Not Shown, As an alternate to Item 2) **—** For use with Items 5F or 5G or 5I or Type ULIX only, channel shaped studs, min depth as indicated under Item 5F, 5G or 5I, fabricated from min. 0.015 in. (min bare metal thickness) galvanized steel, spaced a max of 24 in. OC. Studs to be cut 3/4 in. less than assembly height.
CLARKDETRICH BUILDING SYSTEMS — CD ProSTUD

DMFCWBS L L L C — ProSTUD
MBA METAL FRAMING — ProSTUD

RAM SALES L L C — Ram ProSTUD

STEEL STRUCTURAL PRODUCTS L L C — Tri-S ProSTUD

2F. **Framing Members* — Steel Studs —** Not Shown — In lieu of Item 2 — proprietary channel shaped steel studs, minimum width indicated under Item 5, 1-1/4 in. deep fabricated from min 0.015 in. (min bare metal thickness) galvanized steel. Studs 3/8 in. to 3/4 in. less in lengths than assembly heights.
SUPER STUD BUILDING PRODUCTS — The Edge

2G. **Framing Members* — Steel Studs —** Not Shown — In lieu of Item 2 — proprietary channel shaped studs, minimum width indicated under Item 5, Studs to be cut 3/8 to 3/4 in less than the assembly height.
STUDCO BUILDING SYSTEMS — CROCSTUD

2H. **Framing Members* — Steel Studs —** (Not Shown, As an alternate to Item 2) **—** Fabricated from min. 0.015 in. (min bare metal thickness) galvanized steel, spaced a max of 24 in. OC. Studs to be cut 3/4 in. less than assembly height.
TELLING INDUSTRIES L L C — TRUE-STUD™

2I. **Framing Members* — Steel Studs —**

2J. **Framing Members* — Metal Studs —** Not Shown **—** In lieu of Item 2 **—** proprietary channel shaped steel studs, min depth as indicated under Item 5, spaced a max if 24 in. OC, fabricated from min 0.018 in. thick galv steel. Studs cut 3/8 in. to 3/4 in. less in lengths than assembly heights

2K. **Framing Members* — Steel Studs —** As an alternate to Item 2 **—** For use with Item 1, channel shaped studs, fabricated from min 25 MSG corrosion-protected steel, min depth as indicated under Item 5, spaced a max of 24 in. OC. Studs to be cut 3/8 to 3/4 in. less than assembly height.
EB METAL INC — NITROSTUD

2L. **Framing Members* — Steel Studs —** As an alternate to Item 2 **—** For use with Item 1, channel shaped studs, fabricated from min 25 MSG corrosion-protected steel, min depth as indicated under Item 5, spaced a max of 24 in. OC. Studs to be cut 3/8 to 3/4 in. less than assembly height.
OLMAR SUPPLY INC — PRIMESTUD

2M. **Framing Members* — Steel Studs —** As an alternate to Item 2 **—** For use with Item 1, channel shaped studs, fabricated from min 25 MSG corrosion-protected steel, min depth as indicated under Item 5, spaced a max of 24 in. OC. Studs to be cut 3/8 to 3/4 in. less than assembly height.
MARINO/WARE, DIV OF WARE INDUSTRIES INC — StudRite™

2N. **Framing Members*— Steel Studs —** As an alternate to Item 2 **—** proprietary channel shaped steel studs, min depth 3-1/2 in. and as indicated under Item 5, spaced a max of 24 in. OC, fabricated from min 0.018 in. thick galv steel. Studs cut 3/8 in. to 3/4 in. less in length than assembly height.
RESCUE METAL FRAMING, L L C — AlphaSTUD

2O. **Framing Members* — Steel Studs —** As an alternate to Item 2 **—** proprietary channel shaped steel studs, min width as indicated under Item 5, galv steel. Studs to be cut 3/8 to 3/4 in. less in lengths than assembly height. Spaced 24 in. OC max.
RONDO BUILDING SERVICES PTY LTD — Rondo Lipped Wall Stud

2P. **Framing Members* — Steel Studs —** As an alternate to Item 2 **—** proprietary channel shaped steel studs, min width as indicated under Item 5, min 25 MSG galv steel. Studs to be cut 3/8 to 3/4 in. less in lengths than assembly height. Spaced 24 in. OC max.
OEG BUILDING MATERIALS — OEG Stud

2Q. **Framing Members* — Steel Studs —** Not Shown — In lieu of Item 2 — For use with Item 1O, proprietary channel shaped steel studs, min depth as indicated under Item 5, spaced a max of 24 in. OC, fabricated from min 25 MSG (0.018 in. min. bare metal thickness). Studs cut 3/8 in. to 3/4 in. less in lengths than assembly heights.
CALIFORNIA EXPANDED METAL PRODUCTS CO — Viper X

3. **Wood Structural Panel Sheathing —** (Optional, For use with Item 5 Only) **—** (Not Shown) **—** 4 ft wide, 7/16 in. thick oriented strand board (OSB) or 15/32 in. thick structural 1 sheathing (plywood) complying with DOC PS1 or PS2, or APA Standard PRP-108, manufactured with exterior glue, applied horizontally or vertically to the steel studs. Vertical joints centered on studs, and staggered one stud space from wallboard joints. Attached to studs with flat-head self-drilling tapping screws with a min. head diam. of 0.292 in. at maximum 6 in. OC. in the perimeter and 12 in. OC. in the field. When used, gypsum panels attached over OSB or plywood panels and fastener lengths for gypsum panels increased by min. 1/2 in.

4. **Batts and Blankets* —** (Required as indicated under Item 5) **—** Mineral wool batts, friction fitted between studs and runners. Min nom thickness as indicated under Item 5.
See **Batts and Blankets** (BKNV or BZJZ) Categories for names of Classified companies.

4A. **Batts and Blankets* —** (Optional) — Placed in stud cavities, any glass fiber or mineral wool insulation bearing the UL Classification Marking as to Surface Burning Characteristics and/or Fire Resistance.
See **Batts and Blankets** (BKNV or BZJZ) Categories for names of Classified companies.

4B. **Fiber, Sprayed* —** (Optional, for use with Type ULIX) Where insulation is required - Spray applied granulated mineral fiber material. The fiber is applied with adhesive at a minimum density of 4.0 pcf to completely fill the wall cavity in accordance with the application instructions supplied with the product. See **Fiber, Sprayed** (CCAZ).
AMERICAN ROCKWOOL MANUFACTURING, LLC — Type Rockwool Premium Plus

4C. **Foamed Plastic* —** (Where Batts and Blankets*, Item 4, are optional, for use with Item 5K) **—** Spray applied, foamed plastic insulation, at any thickness from partial fill to completely filling stud cavity, for 2 hour rated assemblies only. When foamed plastic is used, minimum stud depth shall be 3-1/2 in.

CARLISLE SPRAY FOAM INSULATION — Types SealTite Pro Closed Cell (CC), SealTite Pro Open Cell (OC), SealTite Pro OCX, SealTite Pro No Trim 21, SealTite Pro One Zero, Foamsulate Closed Cell, Foamsulate OCX, Foamsulate 70, and Foamsulate HFO.

5. **Gypsum Board* —** Gypsum panels with beveled, square or tapered edges, applied vertically or horizontally. Vertical joints centered over studs and staggered one stud cavity on opposite sides of studs. Vertical joints in adjacent layers (multilayer systems) staggered one stud cavity. Horizontal joints need not be backed by steel framing. Horizontal edge joints and horizontal butt joints on opposite sides of studs need not be staggered. Horizontal edge joints and horizontal butt joints in adjacent layers (multilayer systems) staggered a min of 12 in. Horizontal edge joints and horizontal butt joints in adjacent layers (multilayer systems) with Type ULIX need not be staggered. The thickness and number of layers for the 1 hr, 2 hr, 3 hr and 4 hr ratings are as follows:

Gypsum Board Protection on Each Side of Wall

Rating, Hr	Min Stud Depth, in. Items 2, 2C, 2D, 2F, 2G, 2O	No. of Layers & Thkns of Panel	Min Thkns of Insulation (Item 4)
1	3-1/2	1 layer, 5/8 in. thick	Optional
1	2-1/2	1 layer, 1/2 in. thick	1-1/2 in.
1	1-5/8	1 layer, 3/4 in. thick	Optional
2	1-5/8	2 layers, 1/2 in. thick	Optional
2	1-5/8	2 layers, 5/8 in. thick	Optional
2	3-1/2	1 layer, 3/4 in. thick	3 in.
3	1-5/8	3 layers, 1/2 in. thick	Optional
3	1-5/8	2 layers, 3/4 in. thick	Optional
3	1-5/8	3 layers, 5/8 in. thick	Optional
4	1-5/8	4 layers, 5/8 in. thick	Optional
4	1-5/8	4 layers, 1/2 in. thick	Optional
4	2-1/2	2 layers, 3/4 in. thick	2 in.

CGC INC — 1/2 in. thick Type C, IP-X2 or IPC-AR; WRC, 5/8 in. thick Type AR, C, IP-AR, IP-X1, IP-X2, IPC-AR, SCX, SHX, ULIX, WRX or WRC; 3/4 in. thick Types IP-X3 or ULTRACODE

THE SIAM GYPSUM INDUSTRY (SONGKHLA) CO — 1/2 in. thick Type C and 5/8 in. thick Type SCX

UNITED STATES GYPSUM CO — 1/2 in. thick Type C, IP-X2, IPC-AR or WRC; 5/8 in. thick Type SCX, SGX, SHX, ULIX, WRX, IP-X1, AR, C, WRC, FRX-G, IP-AR, IP-X2, IPC-AR; 3/4 in. thick Types IP-X3 or ULTRACODE

USG BORAL DRYWALL SFZ LLC — 1/2 in. Type C; 5/8 in. Types C, SCX, SGX, ULTRACODE

USG MEXICO S A DE C V — 1/2 in. thick Type C, IP-X2, IPC-AR or WRC; 5/8 in. thick Type AR, C, IP-AR, IP-X1, IP-X2, IPC-AR, SCX, SHX, WRX, WRC or; 3/4 in. thick Types IP-X3 or ULTRACODE

When Item 7B, **Steel Framing Members***, is used, Nonbearing Wall Rating is limited to 1 Hr. Min. stud depth is 3-1/2 in., min. thickness of insulation (Item 4) is 3 in., and two layers of gypsum board panels (1/2 in. or 5/8 in. thick) shall be attached to furring channels as described in Item 6. One layer of gypsum board panels (1/2 in. or 5/8 in. thick) attached to opposite side of stud without furring channels as described in Item 6.

5A. **Gypsum Board* —** (As an alternate to Item 5) **—** 5/8 in. thick, 24 to 54 in. wide, applied horizontally as the outer layer to one side of the assembly. Secured as described in Item 6.
CGC INC — Type SHX.

UNITED STATES GYPSUM CO — Type FRX-G, SHX.

USG MEXICO S A DE C V — Type SHX.

5B. **Gypsum Board* —** (Not Shown) **—** As an alternate to Item 5 when used as the base layer on one or both sides of wall when 5/8 in or 3/4 in. thick products are specified. For direct attachment only to steel studs Item 2A, (not to be used with Item 3) **—** Nom 5/8 in. or 3/4 in. may be used as alternate to all 5/8 in. or 3/4 in. shown in Item 5, Wallboard Protection on Each Side of Wall table. Nom 5/8 in. or 3/4 in. thick lead backed gypsum panels with beveled, square or tapered edges, applied vertically. Vertical joints centered over studs and staggered min 1 stud cavity on opposite sides of studs. Gypsum board secured to 20 MSG steel studs Item 2A with 1-1/4 in. long Type S-12 steel screws spaced 8 in. OC at perimeter and 12 in. OC in the field. To be used with Lead Batten Strips (see Item 11) or Lead Discs or Tabs (see Item 12).
RAY-BAR ENGINEERING CORP — Type RB-LBG

5C. **Gypsum Board* —** (For Use With Item 2B) **—** Rating Limited to 1 Hour. 5/8 in. thick, 48 in. wide, Gypsum panels with beveled, square or tapered edges, applied vertically or horizontally. (Vertical Application) - The gypsum board is to be installed on each side of the studs with 1 in. long Type S coated steel screws spaced 8 in. OC starting 4 in. from the edge of the board at the vertical edges and 12 in. OC starting 6 in. from the edge of the board at the center of each board. Gypsum boards are to be secured to the top and bottom track with screws spaced 8 in. OC starting 4 in. from the edge of the board at the vertical edges and 12 in. OC starting 6 in. from the edge of the board at the center of each board. Vertical joints are to be centered over studs and staggered one stud cavity on opposite sides of studs. (Horizontal Application) - The gypsum board is to be installed on each side of the studs with 1 in. long Type S coated steel screws spaced 8 in. OC starting 4 in. from the edge of the board at the vertical edges and 12 in. OC starting 6 in. from the edge of the board at the center of each board. Gypsum boards are to be secured to the top and bottom track with screws spaced 8 in. OC starting 4 in. from the edge of the board. Fasteners shall not penetrate through both the stud and the track at the same time. All horizontal joints are to be backed as outlined under section VI of Volume 1 in the Fire Resistive Directory.
CGC INC — Type SCX, ULIX.

THE SIAM GYPSUM INDUSTRY (SONGKHLA) CO — Type SCX

UNITED STATES GYPSUM CO — Type SCX, SGX, ULIX.

USG BORAL DRYWALL SFZ LLC — Type SCX

USG MEXICO S A DE C V — Type SCX

5D. **Gypsum Board* —** (As an alternate to Item 5) **—** 5/8 in. thick, 48 in. wide, applied vertically or horizontally. Secured as described in Item 6. For use with Items 1 and 2 only.
CGC INC — Type USGX

UNITED STATES GYPSUM CO — Type USGX

USG BORAL DRYWALL SFZ LLC — Type USGX

USG MEXICO S A DE C V — Type USGX

5E. **Gypsum Board* —** (Not Shown) **—** (As an alternate to Item 5 when used as the base layer on one or both sides of wall when 1/2 in. or 5/8 in thick products are specified, For direct attachment only to steel studs Item 2A, not to be used with Item 3). Nominal 5/8 in. thick lead backed gypsum panels with beveled, square or tapered edges, applied vertically. Vertical joints centered over studs and staggered min 1 stud cavity on opposite sides of studs. Wallboard secured to studs with 1-1/4 in. long Type S-12 (or No. 6 by 1-1/4 in. long bugle head fine driller) steel screws spaced 8 in. OC at perimeter and 12 in. OC in the field.
NEW ENGLAND LEAD BURNING CO INC, DBA NELCO — Nelco

5F. **Gypsum Board* —** (As an alternate to Item 5) **—** For use with Items 1E and 2E and limited to 1 Hour Rating only, Gypsum panels with beveled, square or tapered edges, applied vertically, and fastened to the steel studs with 1 in. long Type S screws spaced 8 in. OC along vertical and bottom edges and 12 in. OC in the field. Vertical joints centered over studs and staggered one stud cavity on opposite sides of studs. Steel stud depth shall be a minimum 3-5/8 in.
THE SIAM GYPSUM INDUSTRY (SONGKHLA) CO — Type SCX

UNITED STATES GYPSUM CO — 5/8 in. thick Type SCX, SGX, ULIX

USG BORAL DRYWALL SFZ LLC — 5/8 in. thick Type SCX, SGX

5G. **Gypsum Board* —** (As an alternate to Item 5) **—** For use with Items 1E and 2E only, Gypsum panels with beveled, square or tapered edges, applied vertically or horizontally, as specified in the table below and fastened to the steel studs as described in Item 6. Vertical joints centered over studs and staggered one stud cavity on opposite sides of studs. Vertical joints in adjacent layers (multilayer systems) staggered one stud cavity. Horizontal joints need not be backed by steel framing. Horizontal edge joints and horizontal butt joints on opposite sides of studs need not be staggered. Horizontal edge joints and horizontal butt joints in adjacent layers (multilayer systems) staggered a min of 12 in. The thickness and number of layers for the 2 hr, 3 hr and 4 hr ratings are as follows:

Gypsum Board Protection on Each Side of Wall

Rating, Hr	Min Stud Depth, in. Item 2E	No. of Layers & Thickness of Panel	Min Thkns of Insulation (Item 4)
2	1-5/8	2 layers, 1/2 in. thick	Optional
2	1-5/8	2 layers, 5/8 in. thick	Optional
3	1-5/8	3 layers, 1/2 in. thick	Optional
3	1-5/8	3 layers, 5/8 in. thick	Optional
4	1-5/8	4 layers, 5/8 in. thick	Optional
4	1-5/8	4 layers, 1/2 in. thick	Optional

CGC INC — 1/2 in. thick Type C, IP-X2 or IPC-AR, 5/8 in. thick Type AR, C, IP-AR, IP-X1, IP-X2, IPC-AR, SCX, SHX, ULIX or 3/4 in. thick Types IP-X3 or ULTRACODE

THE SIAM GYPSUM INDUSTRY (SONGKHLA) CO — 1/2 in. thick Type C and 5/8 in. thick SCX

UNITED STATES GYPSUM CO — 1/2 in. thick Type C, IP-X2, IPC-AR or; 5/8 in. thick Type SCX, SGX, SHX, IP-X1, AR, C , FRX-G, IP-AR, IP-X2, IPC-AR, ULIX; 3/4 in. thick Types IP-X3 or ULTRACODE

USG BORAL DRYWALL SFZ LLC — 1/2 in. Type C; 5/8 in. Types C, SCX, SGX, ULTRACODE

USG MEXICO S A DE C V — 1/2 in. thick Type C, IP-X2, IPC-AR or; 5/8 in. thick Type AR, C, IP-AR, IP-X1, IP-X2, IPC-AR, SCX, SHX, or; 3/4 in. thick Types IP-X3 or ULTRACODE

5H. **Gypsum Board* —** (Not Shown) **—** (As an alternate to Item 5 when used as the base layer on one or both sides of wall when 5/8 or 3/4 in thick products are specified. For direct attachment only to steel studs Item 2A, (not to be used with Item 3) - Nom 5/8 or 3/4 in. may be used as alternate to all 5/8 or 3/4 in. shown in Item 5, Wallboard Protection on Each Side of Wall table. Nom 5/8 or 3/4 in. thick lead backed gypsum panels with beveled, square or tapered edges, applied vertically. Vertical joints centered over 20 MSG steel studs and staggered min 1 stud cavity on opposite sides of studs. Wallboard secured to studs with 1-1/4 in. long Type S-12 steel screws spaced 8 in. OC at perimeter and 12 in. OC in the field. Gypsum board secured to 20 MSG steel studs Item 2B with 1-1/4 in. long Type S-12 steel screws spaced 8 in. OC at perimeter and 12 in. OC in the field. For Joint Compound see Item 5. To be used with Lead Batten Strips (see Item 11A) or Lead Discs (see Item 12A).
MAYCO INDUSTRIES INC — Type X-Ray Shielded Gypsum

5I. **Gypsum Board* —** (As an alternate to Item 5) **—** Nom. 5/8 in. thick gypsum panels with beveled, square or tapered edges installed as described in Item 5. Steel stud minimum depth shall be as indicated in Item 5.
CGC INC — Type ULIX, ULX

tsk
225 South Arlington Avenue,
Suite A
Reno NV, 89501
phone: 775.857.2949
fax: 775.857.2403
www.tska.com

THESE DRAWINGS AND SPECIFICATIONS ARE THE PROPERTY OF TATE SNYDER KIMSEY ARCHITECTS AND MAY NOT BE REPRODUCED OR USED FOR ANY PURPOSE WITHOUT THE ARCHITECTS WRITTEN CONSENT. AS INSTRUMENTS OF SERVICE, THESE DOCUMENTS ARE NOT FINAL AND READY FOR USE, AND THEREFORE NOT VALID, UNLESS THEY ARE SEALED, SIGNED AND DATED.

Copyright, Ltd 2024

Consultant

PLEASE RECYCLE

Project
SPARKS Fire Station #6

6963 SCHEIDBAR ROAD, SPARKS NEVADA 89436

Job No: 22-043

Owner
CITY OF SPARKS

BID SET

REVISIONS		
REV	DATE	DESCRIPTION

Sheet Title
LIFE SAFETY FIRE RESISTIVE LISTINGS

Date: JANUARY 4, 2024
Sheet No:
G1.12

UL Product iQ™

BXUV.U937 - Fire-resistance Ratings - ANSI/UL 263

Design/System/Construction/Assembly Usage Disclaimer

- Authorities Having Jurisdiction should be consulted in all cases as to the particular requirements covering the installation and use of UL Certified products, equipment, system, devices, and materials.
- Authorities Having Jurisdiction should be consulted before construction.
- Fire resistance assemblies and products are developed by the design submitter and have been investigated by UL for compliance with applicable requirements. The published information cannot always address every construction nuance encountered in the field.
- When field issues arise, it is recommended the first contact for assistance be the technical service staff provided by the product manufacturer noted for the design. Users of fire resistance assemblies are advised to consult the general Guide Information for each product category and each group of assemblies. The Guide Information includes specifics concerning alternate materials and alternate methods of construction.
- Only products which bear UL's Mark are considered Certified.

BXUV - Fire Resistance Ratings - ANSI/UL 263 Certified for United States

BXUV7 - Fire Resistance Ratings - CAN/ULC-S101 Certified for Canada

See General Information for Fire-resistance Ratings - ANSI/UL 263 Certified for United States
Design Criteria and Allowable Variances

See General Information for Fire Resistance Ratings - CAN/ULC-S101 Certified for Canada
Design Criteria and Allowable Variances

Design No. U937

August 24, 2012

Bearing Wall Rating — 2 or 4 Hr. (See Item #1)

Nonbearing Wall Rating — 2 or 4 Hr. (See Item #1)

This design was evaluated using a load design method other than the Limit States Design Method (e.g., Working Stress Design Method). For jurisdictions employing the Limit States Design Method, such as Canada, a load restriction factor shall be used — See Guide BXUV or BXUV7

*** Indicates such products shall bear the UL or cUL Certification Mark for jurisdictions employing the UL or cUL Certification (such as Canada), respectively.**

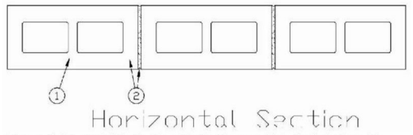

1. **Concrete Blocks* —** Nominal 8 by 8 by 16 in. or 12 by 8 by 16 in. concrete blocks. Classification 2 hr. and 4 hr.
CAROLINA PRESTRESS CORPORATION OF LAKE CITY INC — 8x8x16 Bottom Ash Fire Block, 12x8x16 Bottom Ash Fire Block

2. **Mortar —** Blocks laid in full bed of Type S mortar, nom. 3/8 in. thick. Vertical joints staggered.

*** Indicates such products shall bear the UL or cUL Certification Mark for jurisdictions employing the UL or cUL Certification (such as Canada), respectively.**

Last Updated on 2012-08-24

The appearance of a company's name or product in this database does not in itself assure that products so identified have been manufactured under UL's Follow-Up Service. Only those products bearing the UL Mark should be considered to be Certified and covered under UL's Follow-Up Service. Always look for the Mark on the product.

UL permits the reproduction of the material contained in the Online Certification Directory subject to the following conditions: 1. The Guide Information, Assemblies, Constructions, Designs, Systems, and/or Certifications (files) must be presented in their entirety and in a non-misleading manner, without any manipulation of the data (or drawings). 2. The statement "Reprinted from the Online Certifications Directory with permission from UL" must appear adjacent to the extracted material. In addition, the reprinted material must include a copyright notice in the following format: "© 2021 UL LLC"

UL Product iQ™

XHEZ.W-L-1001 - Through-penetration Firestop Systems

Design/System/Construction/Assembly Usage Disclaimer

- Authorities Having Jurisdiction should be consulted in all cases as to the particular requirements covering the installation and use of UL Certified products, equipment, system, devices, and materials.
- Authorities Having Jurisdiction should be consulted before construction.
- Fire resistance assemblies and products are developed by the design submitter and have been investigated by UL for compliance with applicable requirements. The published information cannot always address every construction nuance encountered in the field.
- When field issues arise, it is recommended the first contact for assistance be the technical service staff provided by the product manufacturer noted for the design. Users of fire resistance assemblies are advised to consult the general Guide Information for each product category and each group of assemblies. The Guide Information includes specifics concerning alternate materials and alternate methods of construction.
- Only products which bear UL's Mark are considered Certified.

XHEZ - Through-penetration Firestop Systems

See General Information for Through-penetration Firestop Systems

System No. W-L-1001

June 15, 2005

F Ratings — 1, 2, 3 and 4 Hr (See Items 2 and 3)

T Ratings — 0, 1, 2, 3, and 4 Hr (See Item 3)

L Rating At Ambient — less than 1 CFM/sq ft

L Rating At 400 F — less than 1 CFM/sq ft

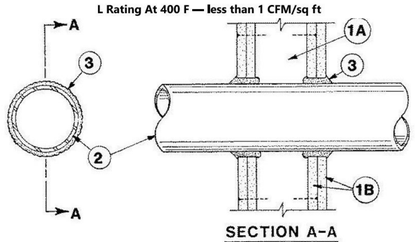

SECTION A-A

1. **Wall Assembly —** The 1, 2, 3 or 4 hr fire-rated gypsum wallboard/stud wall assembly shall be constructed of the materials and in the manner described in the individual U300 or U400 Series Wall or Partition Designs in the UL Fire Resistance Directory and shall include the following construction features:

A. **Studs —** Wall framing may consist of either wood studs (max 2 h fire rated assemblies) or steel channel studs. Wood studs to consist of nom 2 by 4 in. (51 by 102 mm) lumber spaced 16 in. (406 mm) OC with nom 2 by 4 in. (51 by 102 mm) lumber end plates and cross braces. Steel studs to be min 3-5/8 in. (92 mm) wide by 1-3/8 in. (35 mm) deep channels spaced max 24 in. (610 mm) OC.

B. **Gypsum Board* —** Nom 1/2 or 5/8 in. (13 or 16 mm) thick, 4 ft. (122 cm) wide with square or tapered edges. The gypsum wallboard type, thickness, number of layers, fastener type and sheet orientation shall be as specified in the individual U300 or U400 Series Design in the UL Fire Resistance Directory. Max diam of opening is 26 in. (660 mm).

2. **Through-Penetrant —** One metallic pipe, conduit or tubing installed either concentrically or eccentrically within the firestop system. The annular space between pipe, conduit or tubing and periphery of opening shall be min of 0 in / (0 mm). (point contact) to max 2 in. (51 mm) Pipe, conduit or tubing to be rigidly supported on both sides of wall assembly. The following types and sizes of metallic pipes, conduits or tubing may be used:

A. **Steel Pipe —** Nom 24 in. (610 mm) diam (or smaller) Schedule 10 (or heavier) steel pipe.

B. **Iron Pipe —** Nom 24 in. (610 mm) diam (or smaller) service weight (or heavier) cast iron soil pipe, nom 12 in (305 mm) diam (or smaller) or Class 50 (or heavier) ductile iron pressure pipe.

C. **Conduit —** Nom 6 in. (152 mm) diam (or smaller) steel conduit or nom 4 in (102 mm) diam (or smaller) steel electrical metallic tubing

D. **Copper Tubing —** Nom 6 in. (152 mm) diam (or smaller) Type L (or heavier) copper tubing

E. **Copper Pipe —** Nom 6 in. (152 mm) diam (or smaller) Regular (or heavier) copper pipe.

F. **Through Penetrating Product* —** Flexible Metal Piping The following types of steel flexible metal gas piping may be used:

1. Nom 2 in. (51 mm) diam (or smaller) steel flexible metal gas piping. Plastic covering on piping may or may not be removed on both sides of floor or wall assembly.
GASTITE, DIV OF TITEFLEX
2. Nom 1 in. (25 mm) diam (or smaller) steel flexible metal gas piping. Plastic covering on piping may or may not be removed on both sides of floor or wall assembly.
GASTITE, DIV OF TITEFLEX

3. Nom 1 in. (25 mm) diam (or smaller) steel flexible metal gas piping. Plastic covering on piping may or may not be removed on both sides of floor or wall assembly.
WARD MFG L L C

3. **Fill, Void or Cavity Material* — Caulk or Sealant —** Min 5/8 , 1-1/4,1-7/8 and 2-1/2 in. (16, 32, 48 and 64 mm) thickness of caulk for 1, 2, 3 and 4 hr rated assemblies, respectively, applied within annulus, flush with both surfaces of wall. Min 1/4 in. (6 mm) diam bead of caulk applied to gypsum board/penetrant interface at point contact location on both sides of wall. The hourly F Rating of the firestop system is dependent upon the hourly fire rating of the wall assembly in which it is installed, as shown in the following table. The hourly T Rating of the firestop system is dependent upon the type or size of the pipe or conduit and the hourly fire rating of the wall assembly in which it is installed, as tabulated below:

Max Pipe or Conduit Diam In (mm)	F Rating Hr	T Rating Hr
1 (25)	1 or 2	0+, 1 or 2
1 (25)	3 or 4	3 or 4
4 (102)	1 or 2	0
6 (152)	3 or 4	0
12 (305)	1 or 2	0

+When copper pipe is used, T Rating is 0 h.

3M COMPANY — CP 25WB+ or FB-3000 WT.

*** Indicates such products shall bear the UL or cUL Certification Mark for jurisdictions employing the UL or cUL Certification (such as Canada), respectively.**

Last Updated on 2005-06-15

The appearance of a company's name or product in this database does not in itself assure that products so identified have been manufactured under UL's Follow-Up Service. Only those products bearing the UL Mark should be considered to be Certified and covered under UL's Follow-Up Service. Always look for the Mark on the product.

UL permits the reproduction of the material contained in the Online Certification Directory subject to the following conditions: 1. The Guide Information, Assemblies, Constructions, Designs, Systems, and/or Certifications (files) must be presented in their entirety and in a non-misleading manner, without any manipulation of the data (or drawings). 2. The statement "Reprinted from the Online Certifications Directory with permission from UL" must appear adjacent to the extracted material. In addition, the reprinted material must include a copyright notice in the following format: "© 2021 UL LLC"

tsk

225 South Arlington Avenue,
Suite A
Reno NV, 89501
phone: 775.857.2949
fax: 775.857.2403
www.tska.com

THESE DRAWINGS AND SPECIFICATIONS ARE THE PROPERTY OF TATE SNYDER KIMSEY ARCHITECTS AND MAY NOT BE REPRODUCED OR USED FOR ANY PURPOSE WITHOUT THE ARCHITECTS WRITTEN CONSENT. AS INSTRUMENTS OF SERVICE, THESE DOCUMENTS ARE NOT FINAL AND READY FOR USE, AND THEREFORE NOT VALID, UNLESS THEY ARE SEALED, SIGNED AND DATED.

Copyright, Ltd 2024

Consultant

PLEASE RECYCLE

Project

SPARKS Fire Station #6

6963 SCHEIDBAR ROAD, SPARKS NEVADA 89436

Job No: 22-043

Owner

CITY OF SPARKS

BID SET

REVISIONS		
REV	DATE	DESCRIPTION

Sheet Title

LIFE SAFETY FIRE RESISTIVE LISTINGS

Date: JANUARY 4, 2024

Sheet No:

G1.13

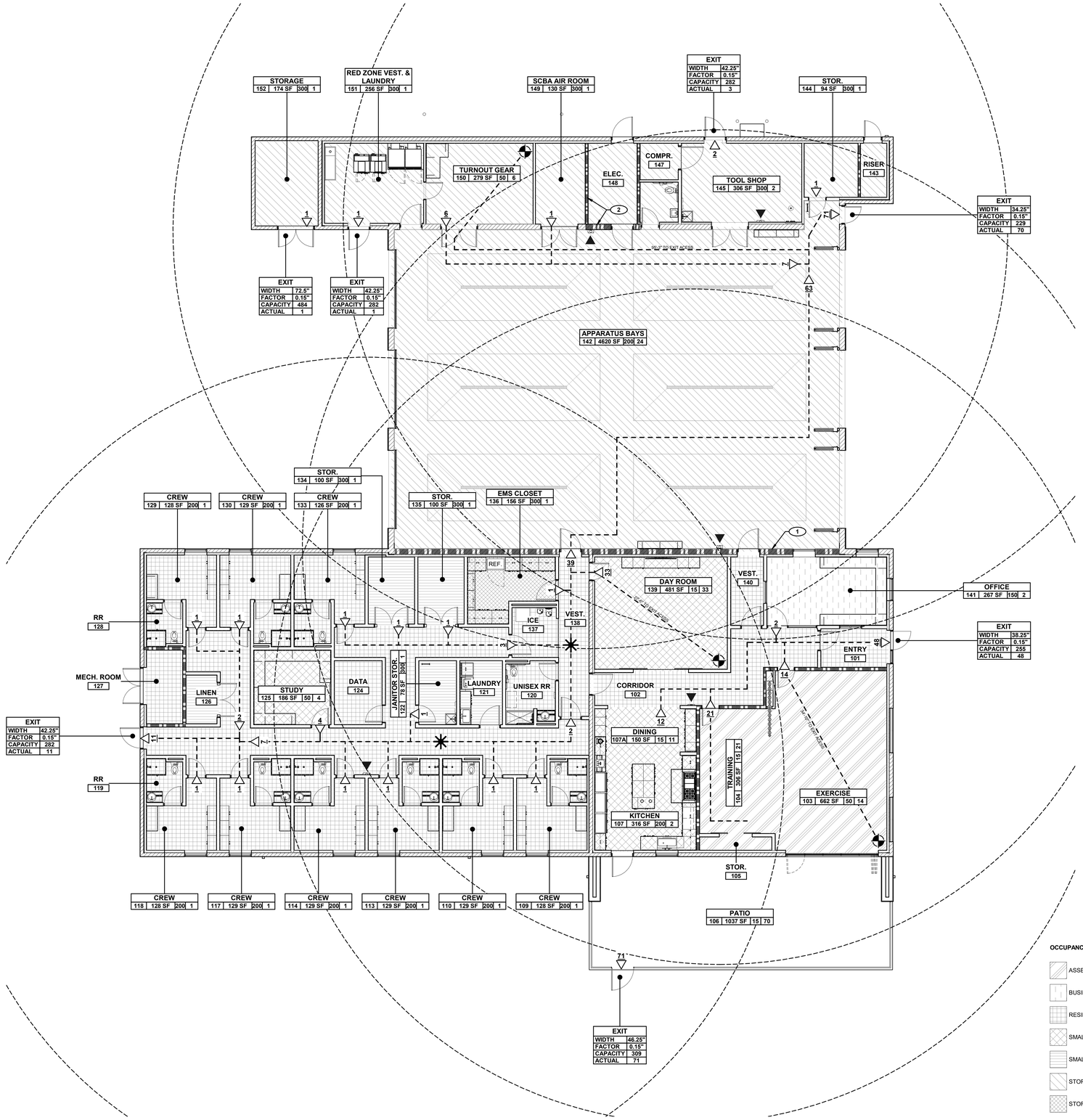

1 LIFE SAFETY PLAN
SCALE: 1/8" = 1'-0"

GENERAL NOTES

1. PER 2018 IBC SECTION 703.7: FIRE WALLS, FIRE BARRIERS, FIRE PARTITIONS, SMOKE BARRIERS, AND SMOKE PARTITIONS OR ANY OTHER WALL REQUIRED TO HAVE PROTECTED OPENINGS OR PENETRATIONS SHALL BE EFFECTIVELY AND PERMANENTLY IDENTIFIED WITH SIGNS OR STENCILING. SUCH IDENTIFICATION SHALL: (1) BE LOCATED IN ACCESSIBLE CONCEALED FLOOR, FLOOR-CEILING, OR ATTIC SPACES; (2) BE LOCATED WITHIN 15' OF THE END OF EACH WALL AND AT INTERVALS NOT EXCEEDING 30' MEASURED HORIZONTALLY ALONG THE WALL OR PARTITION; AND (3) INCLUDE LETTERING NOT LESS THAN 3" IN HEIGHT WITH A MINIMUM 3/8" STROKE IN A CONTRASTING COLOR INCORPORATING THE SUGGESTED WORDING: "FIRE AND/OR SMOKE BARRIER - PROTECT ALL OPENINGS" OR OTHER WORDING
2. FOR CLARITY PURPOSES; HALLWAYS, RESTROOMS, ACCESSORY SPACES, AND ALL OTHER SPACES WITH NO OCCUPANT LOAD ARE NOT LABELED.
3. ELECTRICAL ROOMS TO HAVE 1HR FIRE RATED WALLS, UNLESS NOTED OTHERWISE.
4. BUILDING IS FULLY SPRINKLERED, AND HAS AUDIBLE AND VISUAL FIRE ALARM SYSTEM THROUGHOUT.

KEYNOTES

1. 1-HOUR FIRE BARRIER, REFER TO SHEET LEGEND
2. 2-HOUR FIRE BARRIER, REFER TO SHEET LEGEND

LEGEND

ROOM NAME 1001 15,250 SF 15 888
- ROOM NAME
- OCCUPANT LOAD
- OCCUPANT LOAD FACTOR
- AREA
- ROOM NUMBER

1 HR RATED BARRIER
2 HR RATED BARRIER
PATH OF EGRESS TO EXIT DISCHARGE
POINT AT WHICH 2 EXIT PATHS BECOME AVAILABLE
42 EXIT DIRECTION AND NUMBER OF OCCUPANTS
MOST REMOTE POINT FOR TRAVEL DISTANCE
FIRE EXTINGUISHER CABINET. SEE LIFE SAFETY DETAILS AE2.XX

tsk
225 South Arlington Avenue,
Suite A
Reno NV, 89501
phone: 775.857.2949
fax: 775.857.2403
www.tska.com

NOLBY M HARPSTEAD REGISTERED No. 8775 01/04/2024 ARCHITECT STATE OF NEVADA

THESE DRAWINGS AND SPECIFICATIONS ARE THE PROPERTY OF TATE SNYDER KIMSEY ARCHITECTS AND MAY NOT BE REPRODUCED OR USED FOR ANY PURPOSE WITHOUT THE ARCHITECTS WRITTEN CONSENT. AS INSTRUMENTS OF SERVICE, THESE DOCUMENTS ARE NOT FINAL AND READY FOR USE, AND THEREFORE NOT VALID, UNLESS THEY ARE SEALED, SIGNED AND DATED.
Copyright, Ltd 2024

Consultant

PLEASE RECYCLE

Project
SPARKS Fire Station #6

6963 SCHEIDBAR ROAD, SPARKS NEVADA 89436

Job No: 22-043

Owner
CITY OF SPARKS

CITY OF SPARKS FIRE DEPARTMENT Est. 1905

BID SET

REVISIONS		
REV	DATE	DESCRIPTION

Sheet Title
LIFE SAFETY PLAN

Date: JANUARY 4, 2024
Sheet No:
AE1.01

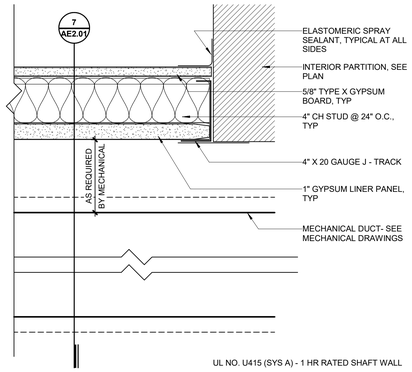

8 1HR RATED DUCT ENCLOSURE DETAIL
SCALE: 3" = 1'-0"

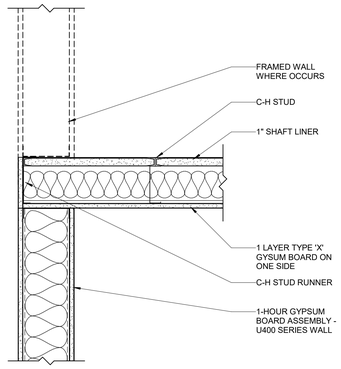

4 1-HOUR WALL TO 1-HOUR CEILING ENCLOSURE
SCALE: 1 1/2" = 1'-0"

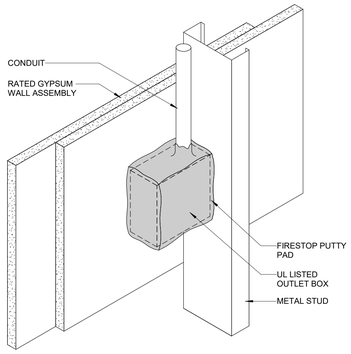

11 OUTLET BOX IN RATED WALL ASSEMBLY
SCALE: 3" = 1'-0"

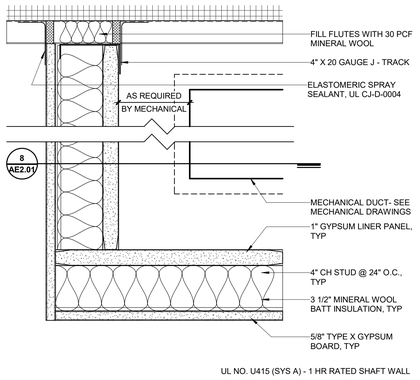

7 1HR RATED DUCT ENCLOSURE SECTION
SCALE: 3" = 1'-0"

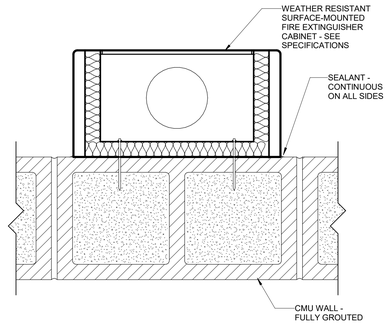

3 SURFACE MOUNTED FEC - CMU WALL
SCALE: 3" = 1'-0"

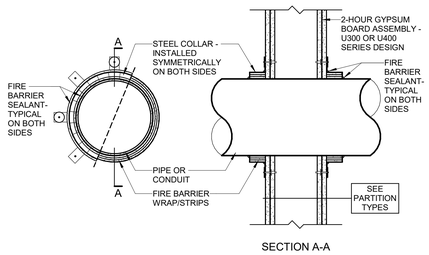

10 FIRESTOP SYSTEMS_WALL PENETRATION 02
SCALE: 1 1/2" = 1'-0"

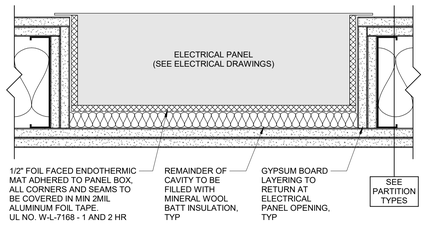

6 ELECTRICAL PANEL DETAIL
SCALE: 3" = 1'-0"

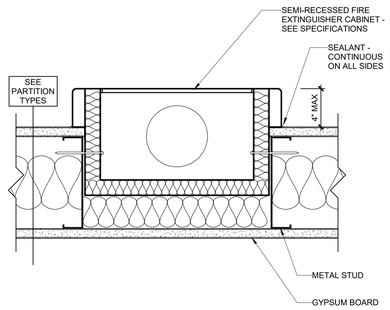

2 SEMI-RECESSED FEC - METAL STUD WALL
SCALE: 3" = 1'-0"

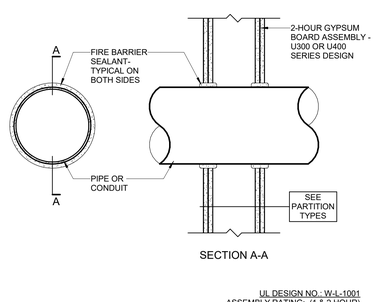

9 FIRESTOP SYSTEMS (1 & 2 HOUR WALLS)
SCALE: 1 1/2" = 1'-0"

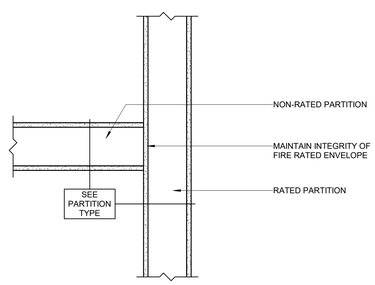

5 TYP. RATED/NON-RATED WALL CONNECTION
SCALE: 1 1/2" = 1'-0"

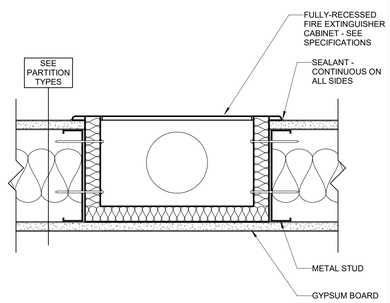

1 FULLY RECESSED FEC - METAL STUD WALL
SCALE: 3" = 1'-0"

tsk
225 South Arlington Avenue,
Suite A
Reno NV, 89501
phone: 775.857.2949
fax: 775.857.2403
www.tska.com

KOLBY M HARPSTEAD
REGISTERED
No. 8775
01/04/2024
ARCHITECT
STATE OF NEVADA

THESE DRAWINGS AND SPECIFICATIONS ARE THE PROPERTY OF TATE SNYDER KIMSEY ARCHITECTS AND MAY NOT BE REPRODUCED OR USED FOR ANY PURPOSE WITHOUT THE ARCHITECTS WRITTEN CONSENT. AS INSTRUMENTS OF SERVICE, THESE DOCUMENTS ARE NOT FINAL AND READY FOR USE, AND THEREFORE NOT VALID, UNLESS THEY ARE SEALED, SIGNED AND DATED.
Copyright, Ltd 2024

Consultant

PLEASE RECYCLE

Project
SPARKS Fire Station #6

6963 SCHEIDBAR ROAD, SPARKS NEVADA 89436

Job No: 22-043

Owner
CITY OF SPARKS

CITY OF SPARKS FIRE DEPARTMENT Est. 1905

BID SET

REVISIONS		
REV	DATE	DESCRIPTION

Sheet Title
LIFE SAFETY DETAILS

Date: JANUARY 4, 2024
Sheet No:
AE2.01

CIVL IMPROVEMENT PLANS FOR

SPARKS FIRE STATION #6

SPARKS NEVADA

OWNER:
CITY OF SPARKS
431 PRATER WAY
SPARKS, NV 89431
(775)-353-4083

BASIS OF BEARINGS

NEVADA STATE PLAN COORDINATE SYSTEM, WEST ZONE, NORTH AMERICAN DATUM OF 1983/1994, HIGH ACCURACY REFERENCE NETWORK (NAD 83/94-HARN), AS DETERMINED USING REAL TIME KINEMATIC (RTK) GPS OBSERVATIONS WITH CORRECTIONS TRANSMITTED BY NORTHERN NEVADA COOPERATIVE REAL TIME NETWORK GPS (NNCRN GPS) THE BEARING BETWEEN GPS REFERENCE STATION "SSB2"-S52SM10000 AND "RSTEAD"-N22SM01037 IS TAKEN AS NORTH 88°59'47" WEST. ALL DIMENSIONS SHOWN ARE GROUND DISTANCES. COMBINED GRID-TO-GROUND FACTOR= 1.000197939.

BASIS OF ELEVATION

THE BASIS OF ELEVATION IS BASED ON THE NORTH AMERICAN VERTICAL DATUM OF 1988 (NAVD 88) AS TAKEN FROM CITY OF SPARKS BENCHMARK 108, WITH A PUBLISHED ELEVATION OF 4459.32 FT. BENCHMARK 108 IS DESCRIBED AS BEING 1¼" BRASS CAP SET IN CONCRETE 1.0' EAST OF "T" POST, 10' SOUTH OF GATE POST AND 5' EAST OF THE RIGHT-OF-WAY FENCE, 0.6 MILES NORTH OF VISTA DEL RANCHO ON WEST SIDE OF VISTA BOULEVARD 33' WEST OF EDGE OF PAVEMENT, 0.1 FOOT ABOVE GROUND AND APPROXIMATE 18" NORTH OF CONCRETE HEADWALL.

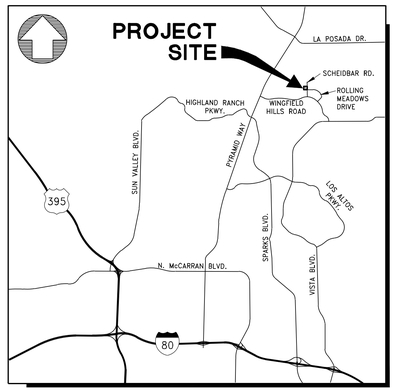

VICINITY MAP

NOT TO SCALE

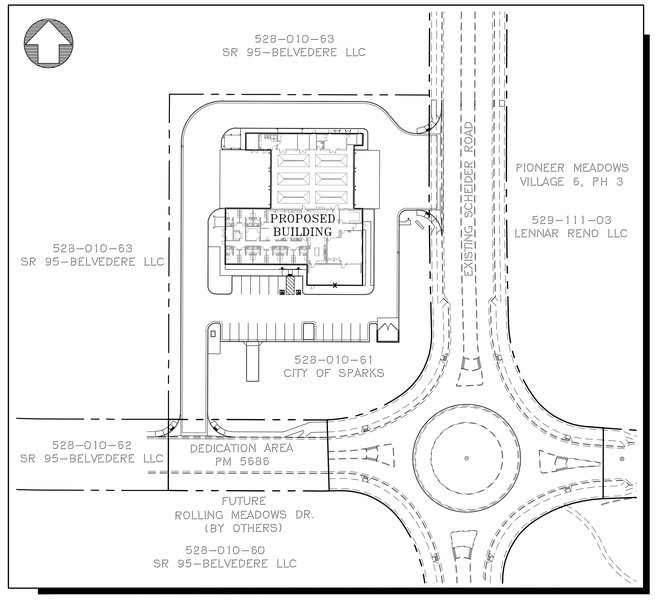

SITE PLAN

NOT TO SCALE

ENGINEER:

WOOD RODGERS
BUILDING RELATIONSHIPS ONE PROJECT AT A TIME
1361 Corporate Boulevard Tel 775.823.4068
Reno, NV 89502 Fax 775.823.4066

ENGINEERS STATEMENT:

THESE PLANS, SHEETS T-1 THROUGH G-1, HAVE BEEN PREPARED IN ACCORDANCE WITH ACCEPTED ENGINEERING PROCEDURES AND GUIDELINES, AND ARE IN SUBSTANTIAL COMPLIANCE WITH APPLICABLE STATUTES, CITY ORDINANCES, STANDARDS, TENTATIVE MAP CONDITIONS, AND CITY COUNCIL CONDITIONS. IN THE EVENT OF A CONFLICT BETWEEN ANY PORTION OF THESE PLANS AND CITY OF RENO STANDARDS, THE STANDARDS SHALL APPLY.

CIVIL SHEET INDEX

SHT No.	DWG ID	DRAWING DESCRIPTION
1	T-1	TITLE SHEET
2	N-1	CIVIL NOTES AND SPECIFICATIONS
3	N-2	CIVIL NOTES AND SPECIFICATIONS
4	D-1	DEMOLITION PLAN
5	CS-1	CIVIL SITE PLAN
6	U-1	UTILITY PLAN
7	G-1	GRADING PLAN
8	D-1	CIVIL DETAILS
9	D-2	CIVIL DETAILS
10	D-3	CIVIL DETAILS
11	EC-1	EROSION CONTROL PLAN

Matthew J. Roulias
Digitally signed by Matthew J. Roulias
DN: cn=Matthew J. Roulias, c=US, o="Wood Rodgers, Inc.", ou=Reno Civil, CN=Matthew J. Roulias
Date: 2024.01.04 11:42:39-08'00'

CONSTRUCTION CONTRACTOR AGREES THAT IN ACCORDANCE WITH GENERALLY ACCEPTED CONSTRUCTION PRACTICES, CONSTRUCTION CONTRACTOR WILL BE REQUIRED TO ASSUME SOLE AND COMPLETE RESPONSIBILITY FOR JOB SITE CONDITIONS DURING THE COURSE OF CONSTRUCTION OF THE PROJECT, INCLUDING SAFETY OF ALL PERSONS AND PROPERTY; THAT THIS REQUIREMENT SHALL BE MADE TO APPLY CONTINUOUSLY AND NOT BE LIMITED TO NORMAL WORKING HOURS, AND CONSTRUCTION CONTRACTOR FURTHER AGREES TO DEFEND, INDEMNIFY AND HOLD THE CITY OF SPARKS AND THE DESIGN CONSULTANT HARMLESS FROM ANY AND ALL LIABILITY, REAL OR ALLEGED, IN CONNECTION WITH THE PERFORMANCE OF WORK ON THIS PROJECT, EXCEPTING LIABILITY ARISING FROM THE SOLE NEGLIGENCE OF THE CITY OF SPARKS OR THE DESIGN CONSULTANT.

UNAUTHORIZED CHANGES & USES: THE DESIGN CONSULTANT PREPARING THESE PLANS WILL NOT BE RESPONSIBLE FOR, OR LIABLE FOR, UNAUTHORIZED CHANGES TO OR USES OF THESE PLANS. ALL CHANGES TO THE PLANS MUST BE IN WRITING AND MUST BE APPROVED BY THE PREPARER OF THESE PLANS.

CITY OF SPARKS APPROVAL

1/5/2024

JON R. ERICSON, P.E., PTOE
City Engineer

tsk
225 South Arlington Avenue,
Suite A
Reno NV, 89501
phone: 775.857.2949
fax: 775.857.2403
www.tska.com

THESE DRAWINGS AND SPECIFICATIONS ARE THE PROPERTY OF TATE SNYDER KIMSEY ARCHITECTS AND MAY NOT BE REPRODUCED OR USED FOR ANY PURPOSE WITHOUT THE ARCHITECTS WRITTEN CONSENT. AS INSTRUMENTS OF SERVICE, THESE DOCUMENTS ARE NOT FINAL AND READY FOR USE, AND THEREFORE NOT VALID, UNLESS THEY ARE SEALED, SIGNED AND DATED.

Copyright, Ltd 2023

Consultant

WOOD RODGERS
BUILDING RELATIONSHIPS ONE PROJECT AT A TIME
1361 Corporate Boulevard Tel 775.823.4068
Reno, NV 89502 Fax 775.823.4066

PLEASE RECYCLE

Project
SPARKS Fire Station #6

6963 SCHEIDBAR ROAD
SPARKS, NEVADA 89436

Job No: 22-043

Owner
CITY OF SPARKS

MATTHEW J. ROULIAS
Exp: 12-31-25
CIVIL
No. 18708
PROFESSIONAL ENGINEER
STATE OF NEVADA
01/04/2024

BID SET

REVISIONS		
REV	DATE	DESCRIPTION
1	05/31/23	CITY COMMENT REVISIONS
2	08/21/23	TMWA & NVEnergy REVISIONS
3	09/20/23	TMWA & NVEnergy REVISIONS
4	10/17/23	ADDED NEW PARCELS FROM PM 5686
5	01/03/24	BID SET REVIEW & COORDINATION

Sheet Title
TITLE SHEET

Date: APRIL 12, 2023
Sheet No:
T-1

GENERAL NOTES

1. THESE PLANS, SHEETS T-1 THROUGH H-1, HAVE BEEN PREPARED IN ACCORDANCE WITH ACCEPTED ENGINEERING PROCEDURES AND GUIDELINES, AND ARE IN SUBSTANTIAL COMPLIANCE WITH APPLICABLE STATUTES, CITY ORDINANCES OR STANDARDS. IN THE EVENT OF CONFLICT BETWEEN ANY PORTION OF THESE PLANS AND CITY OF SPARKS STANDARDS, THE STANDARDS SHALL APPLY AND THE ENGINEER SHALL BE CONTACTED IMMEDIATELY.

2. ALL CONSTRUCTION AND MATERIALS SHALL CONFORM TO THE ORANGE BOOK 2012 INCLUDING THE LATEST REVISION ADOPTED AND DISTRIBUTED BY WASHOE COUNTY, THE CITY OF SPARKS DESIGN MANUAL, AND INCLUDING ANY ADDITIONS AND MODIFICATIONS THAT ARE SET FORTH IN THE DRAWINGS AND SPECIFICATIONS AND OTHER ORDINANCES AND REGULATIONS THAT MAY APPLY.

3. A GEOTECHNICAL INVESTIGATION WAS PERFORMED FOR THE PROJECT BY WOOD RODGERS, INC. TITLED "GEOTECHNICAL DESIGN REPORT FOR SPARKS FIRE STATION" DATED MARCH, 2023. THE CONTRACTOR SHALL ATTENTIVELY EXAMINE THE SITE IN SUCH A MANNER THAT HE CAN CONFIRM EXISTING SURFACE CONDITIONS WITH THOSE PRESENTED IN THE GEOTECHNICAL REPORT. HE SHALL SATISFY HIMSELF THAT THE QUALITY AND QUANTITY OF EXPOSED MATERIALS AND SUBSURFACE SOIL OR ROCK DEPOSITS HAVE BEEN SATISFACTORILY REPRESENTED BY THE GEOTECHNICAL ENGINEER'S REPORT AND CIVIL ENGINEER'S DRAWINGS. ANY DISCREPANCY THAT MAY BE OF PRIOR KNOWLEDGE TO THE CONTRACTOR THAT IS REVEALED THROUGH HIS INVESTIGATIONS SHALL BE MADE AVAILABLE TO THE OWNER. IT IS THE CONTRACTOR'S RESPONSIBILITY TO REVIEW THE GEOTECHNICAL REPORT PRIOR TO CONSTRUCTION. RESULTS OF THE GEOTECHNICAL INVESTIGATION ALONG WITH THEIR RECOMMENDATIONS SHALL BECOME PART OF THE SPECIFICATIONS BUT DO NOT CONSTITUTE A GUARANTEE OF THE SUBSURFACE CONDITIONS IN ANY WAY.

4. THE CONTRACTOR SHALL ASSUME SOLE AND COMPLETE RESPONSIBILITY FOR JOB SITE CONDITIONS DURING THE COURSE OF CONSTRUCTION OF THIS PROJECT, INCLUDING SAFETY OF ALL PERSONS AND PROPERTY; AND THAT THIS REQUIREMENT SHALL APPLY CONTINUOUSLY, AND NOT BE LIMITED TO NORMAL WORKING HOURS; AND THAT THE CONTRACTOR SHALL DEFEND, INDEMNIFY, AND HOLD THE OWNER AND ENGINEER HARMLESS FROM ANY AND ALL LIABILITY, REAL OR ALLEGED, IN CONNECTION WITH THE PERFORMANCE OF WORK ON THIS PROJECT, EXCEPTING FOR LIABILITY ARISING FROM THE SOLE NEGLIGENCE OF THE OWNER OR ENGINEER.

5. THE CONTRACTOR SHALL BE RESPONSIBLE FOR ALL EXCAVATION AND SHORING PROCEDURES AND CONFORM TO THE LATEST O.S.H.A. REQUIREMENTS.

6. THE CONTRACTOR SHALL MAINTAIN AN ON-GOING DUST CONTROL PROGRAM, INCLUDING WATERING OF OPEN AREAS, IN ORDER TO CONFORM WITH THE LATEST STATE AND COUNTY AIR POLLUTION REGULATIONS. THE CONTRACTOR SHALL HAVE A DUST CONTROL PLAN APPROVED BY THE WASHOE COUNTY DISTRICT HEALTH DEPARTMENT AIR POLLUTION CONTROL DIVISION PRIOR TO COMMENCEMENT OF ANY WORK.

7. THE CONTRACTOR SHALL BE RESPONSIBLE FOR THE DAILY REMOVAL OF ALL CONSTRUCTION MATERIALS SPILLED ON PAVED STREETS, ONSITE AND OFFSITE.

8. THE CONTRACTOR SHALL PURSUE THE WORK IN A CONTINUOUS AND DILIGENT MANNER, CONFORMING TO ALL THE PERTINENT SAFETY REGULATIONS, TO INSURE A TIMELY COMPLETION OF THE PROJECT.

9. THE CONTRACTOR SHALL NOTIFY ALL ENTITIES INVOLVED (PUBLIC AND PRIVATE) 48 HOURS PRIOR TO BEGINNING CONSTRUCTION, AND PROVIDE 48 HOURS PRIOR NOTICE FOR ALL SURVEYING AND INSPECTIONS DURING CONSTRUCTION.

10. ALL AREAS DISTURBED AND LEFT UNDEVELOPED FOR A PERIOD OF MORE THAN 14 DAYS SHALL BE STABILIZED BY THE APPLICATION OF AN APPROVED DUST PALLATIVE AT THE COST OF THE CONTRACTOR.

11. THE CONTRACTOR SHALL BE RESPONSIBLE TO OBTAIN AND/OR COORDINATE WITH THE OWNER AND PAY FOR ALL NECESSARY PERMITS AND FEES REQUIRED FOR CONSTRUCTION. CONTRACTOR TO PROVIDE ALL NECESSARY TRAFFIC CONTROL, MAINTAIN ACCESS TO ALL PARCELS, PROVIDE ALL TEMPORARY AND/OR PERMANENT PATCHING AS REQUIRED BY THE CITY OF SPARKS ORDINANCES AND POLICY STANDARDS.

12. ALL EXISTING UTILITY LOCATIONS, SIZES, AND DESCRIPTIONS AS SHOWN ON THESE DRAWINGS ARE FROM SURFACE OBSERVATIONS USED IN CONJUNCTION WITH AVAILABLE RECORDS, REFERENCE MAPS, DRAWINGS, AND VERBAL STATEMENTS SUPPLIED BY UTILITY COMPANIES, AND MAY NOT BE WHOLLY ACCURATE OR RELIABLE. THE CONTRACTOR SHALL NOTIFY ALL UTILITY COMPANIES WHICH MAY BE AFFECTED BY THE WORK TO OBTAIN ASSISTANCE IN THE LOCATION OF EXISTING MAINS AND SERVICE CONNECTIONS. THE CONTRACTOR SHALL ALSO CALL U.S.A. (1-800-642-2444) PRIOR TO BEGINNING WORK.

13. THE CONTRACTOR SHALL BE RESPONSIBLE FOR ALL CONSTRUCTION SIGNING, BARRICADES AND TRAFFIC DELINEATION TO CONFORM TO THE "MANUAL ON UNIFORM TRAFFIC CONTROL DEVICES" (MUTCD), LATEST EDITION.

14. THE WORK IN THIS CONTRACT INCLUDES ALL ONSITE AND OFFSITE WORK SHOWN ON THESE DRAWINGS, DESCRIBED IN THE SPECIFICATIONS, OR REASONABLY IMPLIED.

15. SHOULD ANY PREHISTORIC OR HISTORIC REMAINS/ARTIFACTS BE DISCOVERED DURING SITE DEVELOPMENT, WORK SHALL TEMPORARILY BE HALTED AT THE SPECIFIC SITE AND THE DEPARTMENT OF CONSERVATION AND NATURAL RESOURCES, DIVISION OF HISTORIC PRESERVATION AND ARCHEOLOGY, SHALL BE NOTIFIED TO RECORD AND PHOTOGRAPH THE SITE. THE PERIOD OF TEMPORARY DELAY SHALL BE LIMITED TO A MAXIMUM OF TWO WORKING DAYS FROM THE DATE OF NOTIFICATION.

16. ALL DIMENSIONS AND DISTANCES ARE TO BACK OF CURB, CURB RETURN, FACE OF BUILDING, FACE OF WALL, FLOW LINE, PROPERTY LINE, CENTER OF STRIPING, CENTER LINE OF PIPE, OR END OF IMPROVEMENTS UNLESS OTHERWISE NOTED.

17. THE CONTRACTOR SHALL, AT ALL TIMES DURING CONSTRUCTION, PROTECT FROM DAMAGE EXISTING IMPROVEMENTS ON AND AROUND THE SITE, INCLUDING, BUT NOT LIMITED TO, PAVEMENT, CURB & GUTTER, SIDEWALK, LANDSCAPING, SIGNAGE, STORM & SANITARY SEWERS, AND ALL UTILITIES. THE CONTRACTOR SHALL ASSUME SOLE RESPONSIBILITY FOR THE REPAIR OF ANY IMPROVEMENTS (EXISTING OR PROPOSED) DAMAGED THROUGHOUT THE COURSE OF CONSTRUCTION.

18. THE CONTRACTOR SHALL PROVIDE AND MAINTAIN AT ALL TIMES EMERGENCY ACCESS TO THE PROJECT SITE TO THE SATISFACTION OF THE CITY OF SPARKS FIRE DEPARTMENT.

19. THE CONTRACTOR SHALL, UPON COMPLETION OF THE PROJECT, PREPARE AND SUBMIT TO THE OWNER RECORD DRAWINGS INDICATING BY DIMENSION AND DESCRIPTION ANY FACILITY CONSTRUCTED CONTRARY TO THAT SHOWN ON THESE PLANS.

20. THE CONTRACTOR SHALL SUBMIT SHOP DRAWINGS OF ALL MATERIALS TO BE USED ON THE SITE TO INCLUDE, BUT NOT BE LIMITED TO, A.C. AND P.C.C. MIX DESIGN, AGGREGATE BASE QUALIFICATIONS, PRECAST CONCRETE, CAST IRON GRATES AND COVERS, PIPING, FENCING, AND SIGNS TO THE PROJECT ENGINEER FOR APPROVAL PRIOR TO THE MANUFACTURE OR USE OF SUCH ITEMS.

21. ALL QUANTITIES SHOWN HEREIN ARE APPROXIMATE AND USED FOR PERMIT AND BOND PURPOSES ONLY. THEY SHALL NOT BE USED IN ANY WAY FOR BIDDING OR CONSTRUCTION. IT SHALL BE THE CONTRACTORS RESPONSIBILITY TO CONDUCT QUANTITY TAKE-OFFS FOR BIDDING AND CONSTRUCTION PURPOSES.

22. INSPECTION REQUIREMENTS SHALL BE IN ACCORDANCE WITH CITY OF SPARKS STANDARDS OR THE STANDARD SPECIFICATIONS, WHICH EVER IS THE MORE STRINGENT.

23. CONTRACTOR SHALL REVIEW THE STORM WATER POLLUTION PREVENTION PLANS (SWPPP) AND CONSTRUCT ALL REQUIRED ITEMS PRIOR TO COMMENCEMENT OF ANY CONSTRUCTION ACTIVITY. CONTRACTOR TO COORDINATE WITH OWNER/DEVELOPER FOR THE MAINTENANCE AND UPDATING OF REQUIREMENTS PER THE SWPPP.

24. THE CONTRACTOR SHALL ELIMINATE ALL MOSQUITO BREEDING PLACES WITHIN THE GRADED AREAS.

GENERAL NOTES (CONTINUED)

25. UNTIL A REGIONAL TESTING AND CERTIFICATION PROGRAM IS DEVELOPED AND IN-PLACE, A BITUMINOUS MIXING PLANT INSPECTION SHALL BE REQUIRED FOR EACH DAY OF ASPHALT PAVEMENT PLACEMENT OR PORTION THEREOF. THIS INSPECTION SHALL INCLUDE, BUT IS NOT LIMITED TO, THE FOLLOWING:
    A. COLLECTION OF SAMPLES-AGGREGATE AND ALPHALT CEMENT;
    B. VERIFICATION OF LIME ADDITION TO THE MIX;
    C. VERIFICATION OF TEMPERATURE OF MIX LEAVING PLANT;
    D. VERIFICATION OF ASPHALT CEMENT TYPE AND OBTAINANCE OF REFINERY CERTIFICATION.

26. SHOULD AN OBVIOUS PROBLEM BE OBSERVED, THE ENGINEER OF RECORD SHALL BE INFORMED IMMEDIATELY, AND THE ENGINEER OF RECORD SHALL REQUIRE CORRECTIVE ACTION.

27. NO CONSTRUCTION EQUIPMENT SHALL BE PARKED OR MATERIAL STORED ON CONCRETE OR ASPHALT SURFACES TO BE MAINTAINED BY THE CITY OF SPARKS.

28. ALL PAVEMENT MARKINGS SHALL BE 60 MIL. REFLECTIVE THERMOPLASTIC FOR ALL LEGEND MARKINGS AND WATERBORNE PAINT FOR ALL CENTERLINE STRIPING. INSTALLATION SHALL BE PER MANUFACTURER'S RECOMMENDATIONS.

UTILITY NOTES

1. ALL SANITARY SEWER LATERALS SHALL BE 4" PVC (SDR-35) AND SHALL HAVE A MINIMUM GRADE OF 2.00 %. ALL LATERALS SHALL EXTEND 10' BEYOND THE STREET RIGHT-OF-WAY.
2. ALL WATER AND SEWER LINES SHALL HAVE A MINIMUM OF A 10' HORIZONTAL SEPARATION OR AN 18" VERTICAL SEPARATION AT CROSSINGS. IN THE EVENT THAT THE WATER MAIN IS TO CROSS BELOW OR WITHIN 18' OF THE SANITARY SEWER MAIN, THE SEWER MAIN SHALL BE DUCTILE IRON OR ENCASED IN CONCRETE SLURRY FOR A MINIMUM OF 10' ON EITHER SIDE OF THE WATER MAIN. 5
3. ALL MANHOLES ARE TYPE 1-48" OR AS SHOWN ON THE PLANS. ALL CATCH BASINS ARE TYPE 4-R OR AS SHOWN ON THE PLAN AND PROFILE SHEETS.
4. PVC SEWER PIPE SHALL BE CLASS SDR-35 UNLESS OTHERWISE NOTED AND CONFORM TO ASTM D3034. INSTALLATION SHALL BE IN ACCORDANCE WITH UNIBELL PLASTIC PIPE ASSOCIATION STANDARDS AND RECOMMENDED PRACTICES.
5. ALL REINFORCED CONCRETE PIPE SHALL BE CLASS III UNLESS OTHERWISE NOTED.
6. ALL EXISTING UTILITIES BEING TIED INTO SHALL BE EXPOSED TO CHECK FOR GRADE CONFORMANCE TO THOSE SHOWN ON THE PLANS. IF A DISCREPANCY OCCURS, CONTACT THE ENGINEER IMMEDIATELY BEFORE PROCEEDING.
7. THE CONTRACTOR SHALL HAVE EXISTING UTILITIES LOCATED BY CALLING "USA" TOLL FREE AT 1-800-642-2444.
8. ALL FIRE HYDRANTS ARE PUBLIC. FIRE HYDRANTS SHALL BE INSTALLED, APPROVED AND OPERATIONAL PRIOR TO COMBUSTIBLE MATERIAL ALLOWED ON SITE.
9. THE GAS AND WATER SYSTEMS SHALL BE OWNED AND MAINTAINED BY NV ENERGY AND TMWA. CONSTRUCTION OF THE WATER SYSTEM SHALL BE COORDINATED WITH TMWA.
10. THE CONTRACTOR SHALL PERFORM AN AIR PRESSURE TEST FOR THE SANITARY SEWER MAINS PER THE CITY OF SPARKS REQUIREMENTS. THE TEST SHALL BE PERFORMED IN THE PRESENCE OF THE CITY ENGINEER.
11. ALL PVC SANITARY SEWER PIPE SHALL BE BALLED AND MANDREL TESTED PER CITY OF SPARKS REQUIREMENTS.
12. ALL STORM DRAINAGE FACILITIES ARE TO BE DEDICATED TO AND MAINTAINED BY THE CITY OF SPARKS. UNLESS OTHERWISE NOTED ON THE PLANS.
13. TELEPHONE, CABLE TELEVISION AND COMMUNICATION FACILITIES ARE NOT SHOWN ON THESE PLANS. THE DEVELOPER SHALL COORDINATE WITH THE APPROPRIATE UTILITY COMPANY FOR MAKING APPLICATION FOR THE DESIGN OF EACH UTILITY COMPANY'S FACILITIES.
14. ALL PVC WATER PIPE SHALL BE PRESSURE TESTED IN ACCORDANCE WITH AWWA C605-05.
15. ELECTRIC AND GAS SHOWN HEREON IS SCHEMATIC ONLY. DESIGN OF ELECTRIC AND GAS SHALL BE BY NV ENERGY.
16. ALL STORM DRAIN LATERALS 15" AND SMALLER SHALL CONNECT TO THE MAIN LINE USING AN INSERTA TEE, TEE FITTING OR AT A MANHOLE. CUTTING PIPE, INSERTING LATERAL, AND SEALING WITH CONCRETE SHALL NOT BE ALLOWED.
17. ALL EFFLUENT PIPE INSTALLED, REGARDLESS OF SIZE, SHALL HAVE A TRACER WIRE INSTALLED IN CONJUNCTION WITH IT TO PROVIDE FOR THE FUTURE LOCATING OF THE PIPE. THE TRACER WIRE SHALL TERMINATE IN VALVE BOXES TO PROVIDE FOR LOCATING THE SECTION OF PIPE BETWEEN RESPECTIVE VALVE BOXES.
18. ALL MANHOLE BARREL JOINTS TO BE WRAPPED WITH EXTERNAL JOINT WRAP M-860 OR APPROVED EQUAL.

GRADING NOTES:

1. ADD 4300' TO ALL FINISHED GRADE ELEVATIONS.
2. ALL GRADING SHALL BE PER THE GEOTECHNICAL REPORTS BY WOOD RODGERS, INC. RECOMMENDATIONS. CONTRACTOR SHALL FAMILIARIZE HIMSELF WITH SAID REPORT PRIOR TO CONSTRUCTION. ANY DISCREPANCIES SHALL BE BROUGHT TO THE ENGINEERS ATTENTION IMMEDIATELY IN ORDER FOR A DETERMINATION FOR A DETERMINATION TO BE MADE.
3. ELEVATIONS SHOWN ARE TOP OF CURB WHEN LOCATED AT THE CURB LINE, OR FINISH GRADE WHEN LOCATED AT STREET CENTERLINE OR WITHIN A LOT.
4. FINISH GRADE REPRESENTS THE ELEVATION OF THE FINISHED SURFACE. IF LOCATED IN A LOT OR COMMON AREA, THE GRADE REPRESENTS THE FINAL SURFACE. IF TOP SOIL IS TO BE PLACED, THE CONTRACTOR SHALL ADJUST THE GRADE SHOWN. IF SHOWN AT CENTERLINE, THE GRADE REPRESENTS THE FINISHED SURFACE GRADE OF THE AC. IF SHOWN AT A HOUSE PAD, THE GRADE REPRESENTS THE FINISHED GRADE AROUND THE EXTERIOR OF THE HOUSE, INCLUDING LANDSCAPING TREATMENTS. FINISH GRADE AT THE RADIUS POINT OF A CUL-DE-SAC OR A STREET WITH AN ISLAND WITH A PLANTER ISLAND IS THE ELEVATION AT WHICH THE ASPHALT WOULD BE PROJECTED TO; IT IS NOT THE ELEVATION OF THE SOIL FOR THE LANDSCAPE ISLAND.
5. CONTRACTOR SHALL USE EXTREME CARE WHEN WORKING AROUND EXISTING UTILITIES AND EXISTING ROADS.
6. CONTRACTOR SHALL HAVE APPROVED DUST CONTROL, GRADING PERMITS AND STORM WATER POLLUTION PREVENTION PLAN PRIOR TO STARTING CONSTRUCTION.
7. CONTRACTOR SHALL USE EXTREME CARE IN WORKING IN AREAS OUTSIDE THE SUBDIVISION BOUNDARY SO AS TO MINIMIZE DISTURBANCE OF EXISTING VEGETATION.
8. CONTRACTOR SHALL COMPLY WITH THE APPROVED STORM WATER DISCHARGE PERMIT BY NEVADA STATE DEPARTMENT OF ENVIRONMENTAL PROTECTION AND COMPLY WITH THE SWPPP.
9. CONTRACTOR SHALL PROVIDE THE NECESSARY CONSTRUCTION DE-WATERING TO PROPERLY CONSTRUCT THE IMPROVEMENTS.
10. CONTRACTOR SHALL CONSTRUCT BUILDING PADS TO THE PAD ELEVATION SHOWN. THE FINISH GRADE (FG) ELEVATION IS THE PROPOSED GRADE AT HOUSE CONSTRUCTION TIME.
11. INDIVIDUAL LOT OWNERS MUST SUBMIT A SITE AND GRADING PLAN, PREPARED BY A REGISTERED CIVIL ENGINEER WHEN APPLYING FOR A BUILDING PERMIT.
12. THE CONTRACTOR SHALL NOTIFY THE CITY OF SPARKS ENGINEERING DIVISION AT LEAST 48 HOURS PRIOR TO COMMENCEMENT OF WORK AND ONLY AFTER A PRE-CONSTRUCTION MEETING BETWEEN THE CITY OF SPARKS, ENGINEER OF RECORD, MATERIALS TESTING LABORATORY, AND GENERAL CONTRACTOR HAS OCCURRED.
13. THE INSPECTION AND TESTING OF SOILS AND ALL OTHER MATERIALS SHALL BE IN CONFORMANCE WITH THE CITY OF SPARKS QUALITY STANDARDS.
14. PIPE BEDDING MATERIAL SHALL CONFORM TO OWNING-UTILITY COMPANY REQUIREMENTS AS APPROVED BY THE CITY OF SPARKS. FOR CITY-OWNED UTILITIES, BEDDING MATERIAL SHALL BE CLASS A OR C, COMPACTED TO MINIMUM 90% RELATIVE COMPACTION. MATERIALS SHALL CONFORM TO SSPWC SECTION 200, AS ADOPTED BY CITY COUNCIL. CLASS C BEDDING REQUIRES INSTALLATION OF GEOTEXTILE FABRIC BETWEEN PIPE ZONE AND BACKFILL MATERIAL. GEOTEXTILE FABRIC SHALL BE MIRAFI 180N OR APPROVED EQUAL. TRENCH BACKFILL MATERIAL SHALL BE TYPE 2, CLASS B OR CLASS E AND COMPACTED TO MINIMUM 90% RELATIVE COMPACTION. MATERIALS SHALL CONFORM TO SSPWC SECTION 200, AS ADOPTED BY CITY COUNCIL. 5
15. PORTLAND CEMENT CONCRETE (P.C.C.) SHALL HAVE THE FOLLOWING CHARACTERISTICS:
    4000 PSI MIN. COMPRESSIVE STRENGTH AT 28 DAYS.
    MINIMUM OF 6 SACKS OF CEMENT PER CUBIC YARD.
    MAXIMUM WATER-CEMENT RATIO OF 0.45.
    6% AIR ENTRAINMENT ±1.5%.
    SLUMP AT 1 TO 4 INCHES.
    MIX DESIGN SHALL CONFORM TO THE REQUIREMENTS OF SECTION 337 OF STANDARD SPECIFICATIONS OF PUBLIC WORKS CONSTRUCTION (SSPWC), AS ADOPTED BY CITY COUNCIL. CEMENT SHALL BE TYPE II. ALL CEMENT CONCRETE SHALL HAVE A COARSE AGGREGATE GRADATION CONFORMING TO SIZE No. 67. POLYPROPYLENE OR CELLULOSE FIBERS SHALL BE ADDED TO THE P.C.C. AT 1.5 LBS. PER CUBIC YARD. ALL MATERIALS SHALL CONFORM TO SSPWC, AS ADOPTED BY CITY COUNCIL.

RESEEDING NOTES:

ALL AREAS TO BE RESEEDED SHALL USE THE MIX BELOW OR AN APPROVED EQUAL.

SPECIES	CULTIVAR	PLS #/ACRE
STREAMBANK WHEATGRASS	SODAR	8.00
SHEEP FESCUE	COVAR	4.00
CREEPING WILDRYE	NATIVE/SHOSHONIC	2.00
INDIAN BLANKETFLOWER	G. ARISTATA	0.25
SULFUR BUCKWHEAT		0.25
PENSTEMON BLEND		0.25
*WILDFLOWER BLEND	80/20	4.00
*CALIFORNIA POPPY	ANNUAL/PERENNIAL	
*BACHELOR BUTTONS		
*SWEET ALYSSUM		
*WALLFLOWER		
TOTAL PLS lbs/acre		18.75

FERTILIZER:

APPLY A NUTRITIOUS BONDED FIBER MATRIX HYDRAULIC SLURRY PER THE MANUFACTURERS RECOMMENDATIONS AND RATES AS FOLLOWS

KIWI POWDER	5 GALS/ACRE
FERTIL-FIBERS	2,000 LBS/ACRE
BIND I ATLAS SUPERDUTY	65 GALS/ACRE
TACKIFIBERS	40 LBS/ACRE

MAINTENANCE

A. EXCLUDE FOOT TRAFFIC AS MUCH AS POSSIBLE DURING PLANT ESTABLISHMENT.

B. AREAS THAT FAIL TO RESPOND OR BECOME DAMAGED SHOULD BE TREATED AGAIN USING THE SAME TREATMENT ORIGINALLY APPLIED.

CITY OF SPARKS APPROVAL

1/5/2024

JON R. ERICSON, P.E., PTOE
City Engineer

tsk

225 South Arlington Avenue,
Suite A
Reno NV, 89501
phone: 775.857.2949
fax: 775.857.2403
www.tska.com

THESE DRAWINGS AND SPECIFICATIONS ARE THE PROPERTY OF TATE SNYDER KIMSEY ARCHITECTS AND MAY NOT BE REPRODUCED OR USED FOR ANY PURPOSE WITHOUT THE ARCHITECTS WRITTEN CONSENT. AS INSTRUMENTS OF SERVICE, THESE DOCUMENTS ARE NOT FINAL AND READY FOR USE, AND THEREFORE NOT VALID, UNLESS THEY ARE SEALED, SIGNED AND DATED.

Copyright, Ltd 2023

Consultant

WOOD RODGERS
BUILDING RELATIONSHIPS ONE PROJECT AT A TIME
1361 Corporate Boulevard
Reno, NV 89502
Tel 775.823.4068
Fax 775.823.4066

PLEASE RECYCLE

Project

SPARKS Fire Station #6

6963 SCHEIDBAR ROAD
SPARKS, NEVADA 89436

Job No: 22-043

Owner

CITY OF SPARKS

STATE OF NEVADA
MATTHEW J. ROULIAS
Exp. 12-31-25
CIVIL
No. 18708
PROFESSIONAL ENGINEER

01/04/2024

BID SET

REVISIONS

REV	DATE	DESCRIPTION
1	05/31/23	CITY COMMENT REVISIONS
2	08/21/23	TMWA & NVEnergy REVISIONS
3	09/20/23	TMWA & NVEnergy REVISIONS
4	10/17/23	ADDED NEW PARCELS FROM PM 5686
5	01/03/24	BID SET REVIEW & COORDINATION

Sheet Title

CIVIL NOTES

Date: APRIL 12, 2023

Sheet No:

N-1

CONSTRUCTION NOTES:

1. CONSTRUCTION HOURS. CONSTRUCTION ACTIVITIES AT THE DEVELOPMENT MAY COMMENCE NO EARLIER THAN 8:00 A.M. AND MUST CEASE NO LATER THAN 7:00 P.M. MONDAY THROUGH FRIDAY, AND FROM 9:00 A.M. TO 5:00 P.M. ON SATURDAY. THERE WILL BE NO CONSTRUCTION ACTIVITIES PERMITTED ON SUNDAY. CONSTRUCTION ACTIVITIES INCLUDE ANY START-UP OF MACHINERY WHICH INVOLVES MATERIAL NOISE TO ANY ADJOINING RESIDENCE OR BUSINESS. THE FOREGOING LIMITATIONS SHALL NOT BE APPLICABLE TO ANY ACTIVITIES INVOLVING DUST CONTROL PROCEDURES PURSUANT TO THE DUST CONTROL PLAN, AS HEREINAFTER DEFINED, VEHICLE OR EQUIPMENT MAINTENANCE, DELIVERY OR MATERIAL (EXCLUDING, HOWEVER, HAULING OF FILL OR DIRT), OR IN THE EVENT OF AN ACTIVITY IN RESPONSE TO AN EMERGENCY SITUATION AT THE DEVELOPMENT. NOTWITHSTANDING THE FOREGOING, THE PARTIES ACKNOWLEDGE THAT THE CONTRACTOR MAY SUBMIT A PLAN TO THE CITY ENGINEER FOR APPROVAL FOR TEMPORARY PERIODS OF CONSTRUCTION ACTIVITIES ON A TWENTY-FOUR (24) HOUR, SEVEN (7) DAY A WEEK BASIS IN THE EVENT IT BECOMES NECESSARY IN ORDER TO COMPLETE PAVING ACTIVITIES PRIOR TO THE ONSET OF ADVERSE WEATHER CONDITIONS. SUCH PLAN MAY INCLUDE TEMPORARY CONSTRUCTION LIGHTING, BUT SHALL PROVIDE FOR REASONABLE MITIGATION FROM SUCH LIGHTING AND NOISE FOR SURROUNDING RESIDENCES AND/OR BUSINESSES. THE CONTRACTOR CAN SUBMIT FOR A TEMPORARY USE PERMIT TO REQUEST WORKING OUTSIDE THE ORDINARY WORKING HOURS. THE PERMIT CAN BE DOWNLOADED FROM THE CITY'S WEBSITE OR THE CITY'S BUILDING COUNTER. 5

2. TRAFFIC CONTROL PLAN. PRIOR TO THE COMMENCEMENT OF ANY CONSTRUCTION ACTIVITIES AT THE DEVELOPMENT, THE CONTRACTOR SHALL SUBMIT A PLAN FOR THE ORDERLY CONTROL AND REGULATION OF CONSTRUCTION RELATED TRAFFIC AT THE DEVELOPMENT, INCLUDING, WITHOUT LIMITATION, THE PROCEDURES RELATING TO SAFETY OF PUBLIC TRAFFIC. TO THE EXTENT THEREOF, AND EMERGENCY ACCESS THROUGH THE DEVELOPMENT, DURING THE COURSE OF CONSTRUCTION TO THE CITY ENGINEER FOR APPROVAL. CONTRACTOR SHALL USE REASONABLE EFFORTS TO MAINTAIN TWO-WAY TRAFFIC THROUGHOUT THE CONSTRUCTION PROCESS WITH A MAXIMUM DELAY OF FIFTEEN (15) MINUTES, EXCEPT TO THE EXTENT THE CITY ENGINEER APPROVES THE TEMPORARY CLOSURE OF PORTIONS OF THE ROADWAY DUE TO PUBLIC SAFETY CONSIDERATIONS. THE TRAFFIC CONTROL PLAN SHALL ALSO SET FORTH THE INTENDED HAUL ROUTES FROM TIME TO TIME FOR DIRT MOVING DURING THE COURSE OF CONSTRUCTION IN ORDER TO AVOID EXCESSIVE LOAD ON SEWER AND WATER LINES IN THE DEVELOPMENT AND THE AREAS ADJOINING THE DEVELOPMENT. NO CONSTRUCTION MAY OCCUR PRIOR TO THE APPROVAL OF THE TRAFFIC CONTROL PLAN. AS CONSTRUCTION PROGRESSES THROUGH THE VARIOUS PHASES OF THE DEVELOPMENT, IT IS ANTICIPATED THAT THE TRAFFIC CONTROL PLAN, INCLUDING HAUL ROUTES, WILL REQUIRE CERTAIN CHANGES FROM TIME TO TIME. PRIOR TO DEVIATION FROM THE APPROVED TRAFFIC PLAN OR HAUL ROUTES, CONTRACTOR SHALL SUBMIT A REVISED TRAFFIC PLAN TO THE CITY ENGINEER FOR ITS APPROVAL, WHICH SHALL, UPON SUCH APPROVAL BECOME THE GOVERNING TRAFFIC PLAN FOR THE DEVELOPMENT. THE CONTRACTOR SHALL MAINTAIN THE ROADWAY SURFACE IN A CONDITION SATISFACTORY TO THE CITY ENGINEER THROUGHOUT THE COURSE OF THE CONSTRUCTION.

3. DUST CONTROL. PRIOR TO THE COMMENCEMENT OF ANY CONSTRUCTION ACTIVITIES AT THE DEVELOPMENT, CONTRACTOR SHALL SUBMIT TO THE WASHOE COUNTY DISTRICT HEALTH DEPARTMENT (THE HEALTH DEPARTMENT) A PLAN FOR DUST CONTROL AT THE DEVELOPMENT. THE PLAN SHALL BE IN ACCORDANCE WITH THE REQUIREMENTS OF NEVADA LAW, INCLUDING, WITHOUT LIMITATION, THE POLLUTION CONTROL AND NPDES REGULATIONS OF THE NEVADA DEPARTMENT OF ENVIRONMENTAL PROTECTION. SUCH STORM WATER POLLUTION PREVENTION PLAN, WHEN APPROVED BY THE HEALTH DEPARTMENT, SHALL BE REFERRED TO HEREIN AS THE DUST CONTROL PLAN AND SHALL BE DEEMED A PART OF THIS AGREEMENT. CONTRACTOR SHALL, AND SHALL CAUSE ITS SUBCONTRACTORS TO AGREE TO, COMPLY IN ALL MATERIAL RESPECTS WITH THE DUST CONTROL PLAN AND ANY MODIFICATIONS, THERETO REQUIRED DURING THE COURSE OF CONSTRUCTION OF THE DEVELOPMENT SHALL BE SUBMITTED TO THE HEALTH DEPARTMENT FOR APPROVAL.

4. CONSTRUCTION YARD. CONTRACTOR SHALL BE RESPONSIBLE TO OBTAIN PERMISSION AND/OR RIGHT OF ENTRY FOR ANY OFF-SITE CONSTRUCTION YARD OR OFF-SITE MATERIAL AND/OR EQUIPMENT STORAGE THAT MAY BE NECESSARY. 1 5
PRIOR TO THE ESTABLISHMENT OF ANY CONSTRUCTION YARD AT THE PROJECT SITE OR OFF-SITE, CONTRACTOR SHALL SUBMIT TO THE CITY ENGINEER AND THE COMMUNITY DEVELOPMENT DIRECTOR A PLAN FOR EACH CONSTRUCTION YARD WHICH PLAN SHALL DESCRIBE THE LOCATION OF THE CONSTRUCTION YARD(S), THE FENCING AND SCREENING TO BE INSTALLED, CONSTRUCTION SITE BMPs USED AT THE CONSTRUCTION YARD TO LIMIT DUST AND SEDIMENT TRANSPORT FROM THE CONSTRUCTION YARD, AND THE ASPHALT APRON TO BE CONSTRUCTED AT THE JUNCTION OF THE PAVED ROAD ADJOINING THE CONSTRUCTION YARD. ANY CONSTRUCTION YARD EXCEEDING ONE ACRE IN SIZE WILL REQUIRE A DUST CONTROL PERMIT AND A CONSTRUCTION STORM WATER GENERAL PERMIT.
THE HOURS OF OPERATION OF THE CONSTRUCTION YARD SHALL BE NO EARLIER THAN 8:00 A.M. AND NO LATER THAN 7:00 P.M., MONDAY THROUGH FRIDAY; & NO EARLIER THAN 9:00 A.M. AND NO LATER THAN 5:00 P.M. ON SATURDAY. THE FOREGOING LIMITATIONS ON HOURS AND DAYS OF OPERATION SHALL NOT APPLY TO OPERATIONS RELATED TO DUST CONTROL.

SLOPE STABILIZATION NOTES:

ALL AREAS DISTURBED BY GRADING OPERATIONS ARE TO BE REVEGETATED PER THE SPECIFICATIONS BELOW. CONTRACTOR IS RESPONSIBLE TO PROTECT THE AREAS OF REVEGETATION DURING THE ESTABLISHMENT PERIOD OF THE PLANT GROWTH.

SLOPES 3:1 TO 5:1 SLOPE PREPARATION:

1. EXCEPT IN AREAS LOCATED WITHIN SINGLE FAMILY LOTS OR ALONG COMMON LOT LINES BETWEEN SINGLE FAMILY RESIDENCES, CUT AND FILL SLOPES BETWEEN 3:1 AND 5:1 SHALL BE STABILIZED BY HYDROSEEDING WITH MULCH AND TACKIFIER AND TEMPORARILY IRRIGATED (IF REQUIRED) UNTIL ESTABLISHED TO THE SATISFACTION OF THE CITY ENGINEER. SATISFACTION OF GROWTH MUST OCCUR WITHIN THE FIRST YEAR OF REVEGETATION. IF NOT ACHIEVED, CONTRACTOR SHALL REHYDROSEED UNACCEPTABLE AREAS AND PROVIDE IRRIGATION UNTIL SATISFACTION OF CITY ENGINEER IS MET.

SLOPES STEEPER THAN 3:1 SLOPE PREPARATION:

2. AFTER THE SLOPE HAS BEEN COMPACTED, THE TOP 3" OF SOIL SHALL BE DISCED AND THEN INSPECTED BY THE CITY ENGINEER. STABILIZE WITH EROSION CONTROL BLANKETS (BON TERRA C52 OR APPROVED EQUAL) AND REVEGETATED PER SPECIFICATIONS BELOW.

PLANTING:

3. THE SEED MIXTURE AND APPLICATION RATE FOR THE SLOPE STABILIZATION SHALL BE TO THE APPROVAL OF THE LANDSCAPE FIRM. SEED SHALL BE DRILLED TO THE SOIL TO A DEPTH RECOMMENDED BY THE SEED SUPPLIER AND LANDSCAPE FIRM.

ROCK RIP-RAP:

4. WHEN ROCK RIP-RAP IS USED FOR SLOPE STABILIZATION, IT SHALL CONTAIN A MINIMUM OF FOUR FRACTURED FACES UNLESS OTHERWISE APPROVED BY THE CITY ENGINEER AND SHALL BE PLACED TO A MINIMUM DEPTH OF 12 INCHES. A MINIMUM OF 75% OF THE RIP-RAP SHALL BE 8-INCH DIAMETER ROCK OR GREATER.

FIRE DEPARTMENT NOTES:

1. FIRE HYDRANTS TO BE PLACED AND DEEMED OPERATIONAL BEFORE COMBUSTIBLES ON SITE.
2. ALL ACCESS ROAD TO BE PAVED OR SIMILIAR.
3. FIRE ACCESS SHALL MEET THE APPROVAL OF THE FIRE MARSHAL PRIOR TO COMBUSTIBLES ALLOWED ON SITE.

LEGEND

EXISTING	PROPOSED	DESCRIPTION
		DRAIN MANHOLE
		SEWER MANHOLE
12" SD	12" SD	DRAIN LINE AND SIZE
		CATCH BASIN
8" SS	8" SS	SEWER LINE AND SIZE
		CLEAN OUT
0+00 EX.SS	0+00 SS	SEWER SERVICE
8" W	8" W	WATER LINE AND SIZE
8" RW	8" RW	RECLAIMED WATER LINE AND SIZE
		WATER LINE REDUCER
		WATER SERVICE
		RECLAIMED WATER IRRIGATION SERVICE
V	V	WATER GATE VALVE
		FIRE HYDRANT
		AIR RELEASE VALVE
		FLUSH VALVE ASSEMBLY
G T E	G T E	GAS, TELEPHONE OR ELECTRIC
		STREET LIGHT
		30" R1 SIGN (STOP)
		TRAFFIC SIGN AS NOTED
X	X	CHAIN LINK FENCE
X X	X X	CHAIN LINK GATE
		DRIVEWAY
		SIDEWALK RAMP
		PROPERTY LINE
		MONUMENT
		TREE TO BE REMOVED/RELOCATED
25 x 31	31.25 FG	SPOT ELEVATION
2.0 TW 44.6 BW 42.6	2.0 TW 44.6 BW 42.6	WALL HEIGHTS TW=TOP OF WALL BW=BOTTOM OF WALL; HEIGHT OF WALL
		CONCRETE SIDEWALK
		TEMPORARY AGGREGATE BASE
		AC PAVING - ACCESS ROADS
		RIPRAP

ABBREVIATIONS

AB	AGGREGATE BASE
AC	ASPHALT CONCRETE PAVEMENT
AVRV	AIR VACUUM RELIEF VALVE
BC	BEGIN CURVE
BM	BENCH MARK
BVC	BEGIN VERTICAL CURVE
BOW	BACK OF WALK
BW	BOTTOM OF WALL
CB	CATCH BASIN
℄	CENTER LINE
CONST	CONSTRUCT
CR	CURB RETURN
CT	COURT
DIP	DUCTILE IRON PIPE
SDMH	STORM DRAIN MANHOLE
DR	DRIVE
E	EAST
EC	END CURVE
ELEV	ELEVATION
EP	EDGE OF PAVEMENT
EX	EXISTING
EXIST	EXISTING
EVC	END OF VERTICAL CURVE
FES	FLARED END SECTION
FG	FINISH GRADE ELEVATION
FH	FIRE HYDRANT
FL	FLOW LINE
FLG	FLANGE
FM	FORCE MAIN
FVA	FLUSH VALVE ASSEMBLY
GR	GRATE
GB	GRADE BREAK
GV	GATE VALVE
HP	HIGH POINT
HDPE	HIGH DENSITY POLYETHYLENE
INV	INVERT
JP	JOINT POLE
L	LEFT
LF	LINEAR FEET
MAX	MAXIMUM
MH	MANHOLE
MIN	MINIMUM
MON	MONUMENT
N	NORTH
PCC	POINT OF COMPOUND CURVE
P.C.C.	PORTLAND CEMENT CONCRETE
PI	POINT OF INTERSECTION
PIVC	POINT OF INTERSECTION VERTICAL CURVE
PL	PROPERTY LINE
PP	POWER POLE
PRC	POINT OF REVERSE CURVATURE
PVC	POINT OF VERTICAL CURVE
PVI	POINT OF VERTICAL INTERSECTION
PVT	POINT OF VERTICAL TANGENT
R, R=	RADIUS
RCB	REINFORCED CONCRETE BOX
RCP	REINFORCED CONCRETE PIPE
RCW	RECLAIMED WATER
R	RIGHT
RW	RIGHT OF WAY
S	SOUTH
SE	SANITARY SEWER EASEMENT
SHT	SHEET
STA	STATION
SS	SANITARY SEWER SERVICE
SSMH	SANITARY SEWER MANHOLE
SW	SIDEWALK
T	TANGENT
TBC,TC	TOP BACK OF CURB
TYP	TYPICAL
TP	TELEPHONE POLE
TW	TOP OF WALL
W	WEST
WM	WATER MAIN

CITY OF SPARKS APPROVAL
1/5/2024
JON R. ERICSON, P.E., PTOE
City Engineer

tsk
225 South Arlington Avenue,
Suite A
Reno NV, 89501
phone: 775.857.2949
fax: 775.857.2403
www.tska.com

THESE DRAWINGS AND SPECIFICATIONS ARE THE PROPERTY OF TATE SNYDER KIMSEY ARCHITECTS AND MAY NOT BE REPRODUCED OR USED FOR ANY PURPOSE WITHOUT THE ARCHITECTS WRITTEN CONSENT. AS INSTRUMENTS OF SERVICE, THESE DOCUMENTS ARE NOT FINAL AND READY FOR USE, AND THEREFORE NOT VALID, UNLESS THEY ARE SEALED, SIGNED AND DATED.

Copyright, Ltd 2023

Consultant

WOOD RODGERS
BUILDING RELATIONSHIPS ONE PROJECT AT A TIME
1361 Corporate Boulevard Tel 775.823.4068
Reno, NV 89502 Fax 775.823.4066

PLEASE RECYCLE

Project
SPARKS Fire Station #6

6963 SCHEIDBAR ROAD
SPARKS, NEVADA 89436

Job No: 22-043

Owner
CITY OF SPARKS

MATTHEW J. ROULIAS
Exp: 12-31-25
CIVIL
No. 18708
PROFESSIONAL ENGINEER
STATE OF NEVADA
01/04/2024

BID SET

REVISIONS

REV	DATE	DESCRIPTION
1	05/31/23	CITY COMMENT REVISIONS
2	08/21/23	TWWA & NVEnergy REVISIONS
3	09/20/23	TWWA & NVEnergy REVISIONS
4	10/17/23	ADDED NEW PARCELS FROM PM 5686
5	01/03/24	BID SET REVIEW & COORDINATION

Sheet Title
CIVIL NOTES

Date: APRIL 12, 2023
Sheet No:
N-2

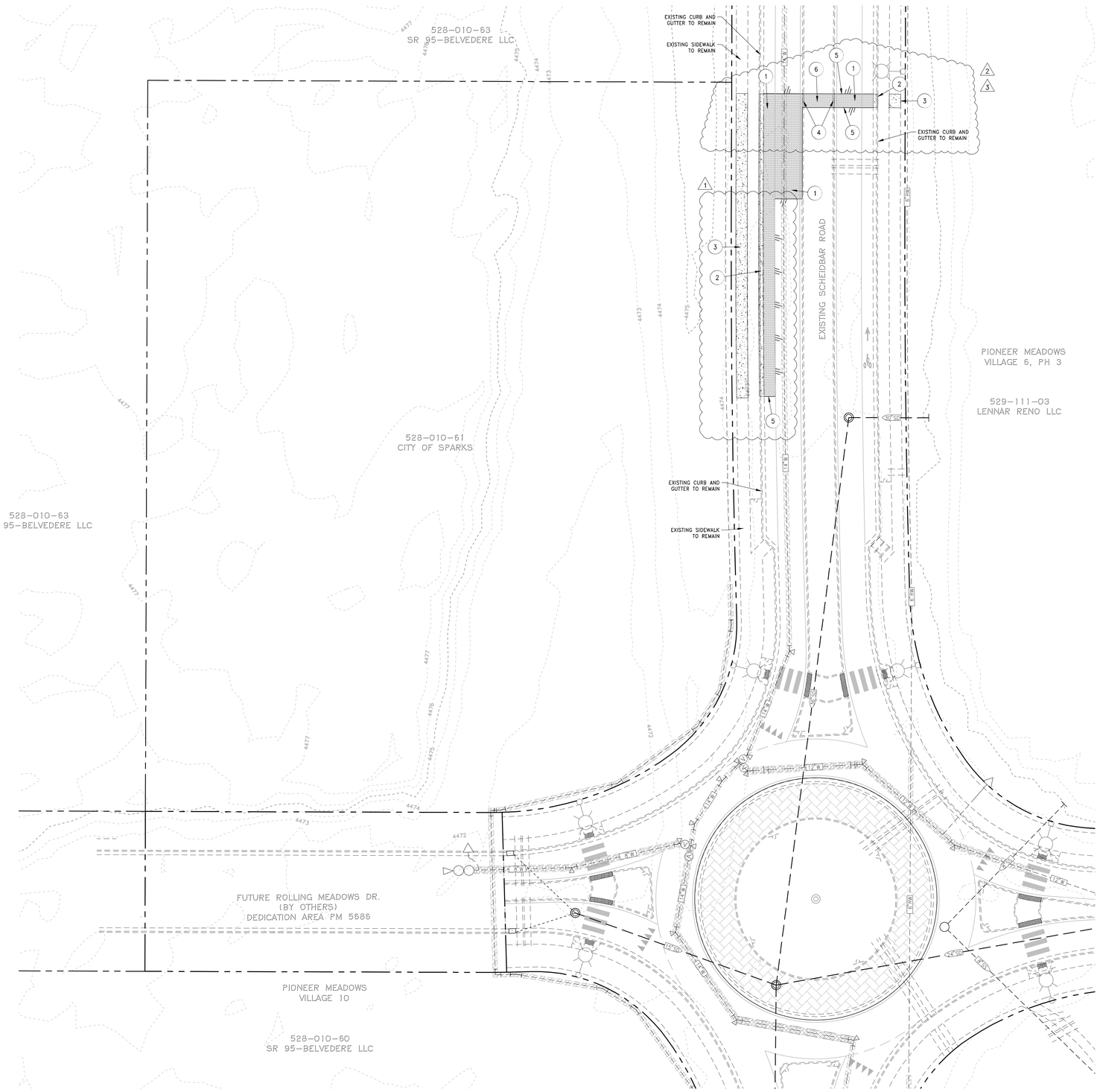

20' 10' 0 20'

SCALE: 1" = 20'

LEGEND:

- REMOVE EXISTING CONCRETE
- REMOVE EXISTING ASPHALT
- SAWCUT LINE (SEE NOTE 4)

NOTES:

1. THE EXISTING UTILITY LOCATIONS REPRESENTED ON THIS SHEET ARE A COMBINATION OF OBSERVED VISIBLE EVIDENCE AND RECORD INFORMATION PROVIDED BY THE RESPECTIVE UTILITY COMPANIES. THEY ARE TO BE CONSIDERED SCHEMATIC AND MUST BE FIELD VERIFIED BY THE CONTRACTOR BY POTHOLING PRIOR TO DEMOLITION.
3. CONTRACTOR SHALL OBTAIN ENCROACHMENT AND EXCAVATION PERMIT REQUIRED PRIOR TO ANY WORK IN THE CITY OF SPARKS RIGHT OF WAY.
4. SAWCUT AND PATCH LIMITS WITHIN CITY OF SPARKS RIGHT OF WAY ARE APPROXIMATE. FINAL DIMENSIONS TO BE DETERMINED WITH ENCROACHMENT AND EXCAVATION PERMIT SUBMITTED BY CONTRACTOR.

KEY NOTES:

1. REMOVE AND REPLACE EXISTING AC (MATCH EXISTING SECTION)
2. REMOVE EXISTING CURB AND GUTTER
3. REMOVE EXISTING SIDEWALK
4. REMOVE AND REPALCE EXISTING MEDIAN CURB
5. SAWCUT LINE
6. REMOVE AND REPLACE EXISTING MEDIAN LANDSCAPING

CITY OF SPARKS APPROVAL

1/5/2024

JON R. ERICSON, P.E., PTOE
City Engineer

tsk
225 South Arlington Avenue,
Suite A
Reno NV, 89501
phone: 775.857.2949
fax: 775.857.2403
www.tska.com

THESE DRAWINGS AND SPECIFICATIONS ARE THE PROPERTY OF TATE SNYDER KIMSEY ARCHITECTS AND MAY NOT BE REPRODUCED OR USED FOR ANY PURPOSE WITHOUT THE ARCHITECTS WRITTEN CONSENT. AS INSTRUMENTS OF SERVICE, THESE DOCUMENTS ARE NOT FINAL AND READY FOR USE, AND THEREFORE NOT VALID, UNLESS THEY ARE SEALED, SIGNED AND DATED.

Copyright, Ltd 2023

Consultant

WOOD RODGERS
BUILDING RELATIONSHIPS ONE PROJECT AT A TIME
1361 Corporate Boulevard
Reno, NV 89502
Tel 775.823.4068
Fax 775.823.4066

PLEASE RECYCLE

Project
SPARKS Fire Station #6

6963 SCHEIDBAR ROAD
SPARKS, NEVADA 89436

Job No: 22-043

Owner
CITY OF SPARKS

MATTHEW J. ROULIAS
Exp 12-31-25
CIVIL
No. 18708
STATE OF NEVADA
PROFESSIONAL ENGINEER
01/04/2024

BID SET

REVISIONS		
REV	DATE	DESCRIPTION
1	05/31/23	CITY COMMENT REVISIONS
2	08/21/23	TWWA & NVEnergy REVISIONS
3	09/20/23	TWWA & NVEnergy REVISIONS
4	10/17/23	ADDED NEW PARCELS FROM PM 5686
5	01/03/24	BID SET REVIEW & COORDINATION

Sheet Title
DEMOLITION PLAN

Date: APRIL 12, 2023
Sheet No:
DE-1

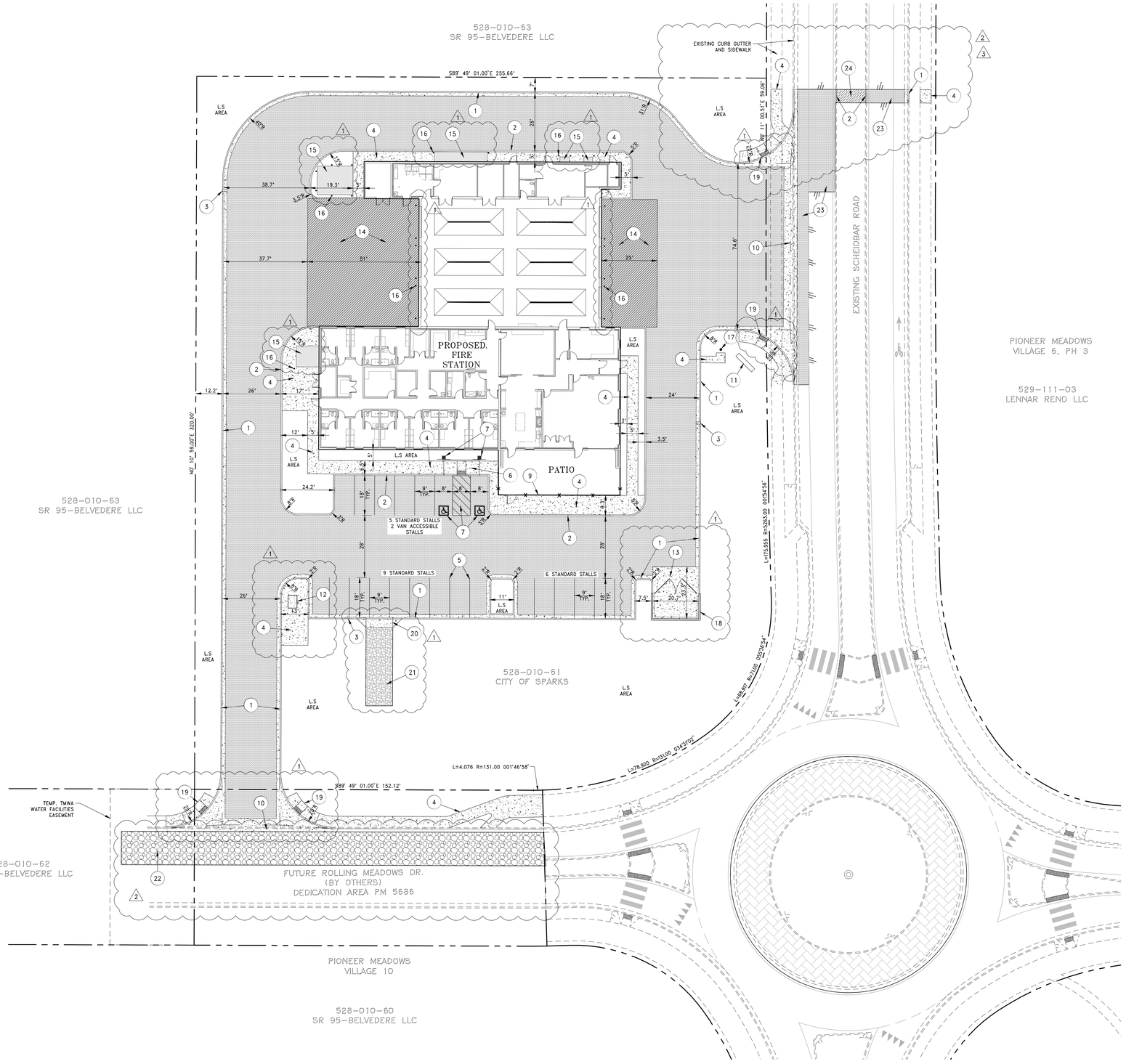

20' 10' 0 20'

SCALE: 1" = 20'

LEGEND:

- P.C.C. TRUCK BAY APRON PAVING (SEE SHEET D-1 FOR DETAILS)
- A.C PAVING (SEE SHEET D-1 FOR DETAILS)
- P.C.C. PAVING (SEE SHEET D-1 FOR DETAILS)
- SAWCUT LINE

NOTES:

1. ALL DIMENSIONS SHOWN ARE TO FRONT FACE OF CURB UNLESS NOTED OTHERWISE.
2. SEE SITE ELECTRICAL PLANS FOR DETAILED DESIGN OF SITE LIGHTING UNDER SEPARATE PERMIT.
3. CONTRACTOR TO REPAIR AND REPLACE ALL STRIPING DAMAGED DURING CONSTRUCTION ON ALL EXISTING ROADWAYS.
4. REFERENCE LANDSCAPE PLANS FOR DETAILS OF LANDSCAPE FEATURES.

KEY NOTES:

1. TYPE 1 P.C.C. CURB AND GUTTER
2. TYPE 2 P.C.C. MEDIAN CURB
3. 12" WIDE CURB OPENING
4. P.C.C. SIDEWALK/FLATWORK (TYP.)
5. PARKING STALL PAVEMENT MARKINGS (TYP.)
6. ACCESSIBLE RAMP
7. ACCESSIBLE PARKING MARKINGS
8. ACCESSIBLE PARKING SIGN
9. PATIO FENCE (TYP.) (SEE LANDSCAPE PLANS)
10. 6" P.C.C. VALLEY GUTTER
11. MONUMENT SIGN (SEE STRUCTURAL PLANS)
12. 3'x5'x4' INSIDE DIMENSIONS DRAFTING TRAINING TANK JENSEN PRECAST MODEL 3660-U-48 WITH TRAFFIC RATED HINGED ACCESS COVER (5)
13. P.C.C. TRASH ENCLOSURE PAVING
14. P.C.C. TRUCK BAY APRON PAVING
15. EXTERIOR EQUIPMENT PAD (SEE STRUCTURAL PLANS)
16. 6" CONCRETE BOLLARD (SEE ARCH PLANS) (TYP. OF 26)
17. FLAGPOLE (SEE ARCHITECTURAL PLANS)
18. TRASH ENCLOSURE (SEE ARCHITECTURAL PLANS)
19. PEDESTRIAN RAMP PER COS DETAIL S-106A (TYP.)
20. COMMERCIAL DRIVEWAY ENTRANCE PER COS DETAIL S-111A
21. 12' WIDE LANDSCAPE MAINTENANCE ACCESS ROAD
22. 15' WIDE, 6" TYPE 2 CLASS B AGG. BASE TEMP. WATER MAIN ACCESS ROAD
23. PERMANENT BITUMINOUS PAVEMENT PATCH PER CITY OF SPARKS STANDARD DETAIL S-115 WITHIN EXISTING SCHEIDBAR RD. (5)
24. REPLACE LANDSCAPING IN MEDIAN AS NECESSARY MATCH EXISTING ADJACENT MEDIAN LANDSCAPING

1/5/2024

tsk

225 South Arlington Avenue,
Suite A
Reno NV, 89501
phone: 775.857.2949
fax: 775.857.2403
www.tska.com

THESE DRAWINGS AND SPECIFICATIONS ARE THE PROPERTY OF TATE SNYDER KIMSEY ARCHITECTS AND MAY NOT BE REPRODUCED OR USED FOR ANY PURPOSE WITHOUT THE ARCHITECTS WRITTEN CONSENT. AS INSTRUMENTS OF SERVICE, THESE DOCUMENTS ARE NOT FINAL AND READY FOR USE, AND THEREFORE NOT VALID, UNLESS THEY ARE SEALED, SIGNED AND DATED.

Copyright, Ltd 2023

Consultant

WOOD RODGERS
BUILDING RELATIONSHIPS ONE PROJECT AT A TIME
1361 Corporate Boulevard Tel 775.823.4068
Reno, NV 89502 Fax 775.823.4066

PLEASE RECYCLE

Project

SPARKS Fire Station #6

6963 SCHEIDBAR ROAD
SPARKS, NEVADA 89436

Job No: 22-043

Owner

CITY OF SPARKS

MATTHEW J. ROULIAS
Expr 12-31-25
CIVIL
No. 18706
STATE OF NEVADA
01/04/2024

BID SET

REVISIONS

REV	DATE	DESCRIPTION
1	05/31/23	CITY COMMENT REVISIONS
2	08/21/23	TMWA & NVEnergy REVISIONS
3	09/20/23	TMWA & NVEnergy REVISIONS
4	10/17/23	ADDED NEW PARCELS FROM PM 5686
5	01/03/24	BID SET REVIEW & COORDINATION

Sheet Title

CIVIL SITE PLAN

Date: APRIL 12, 2023

Sheet No:

S-1

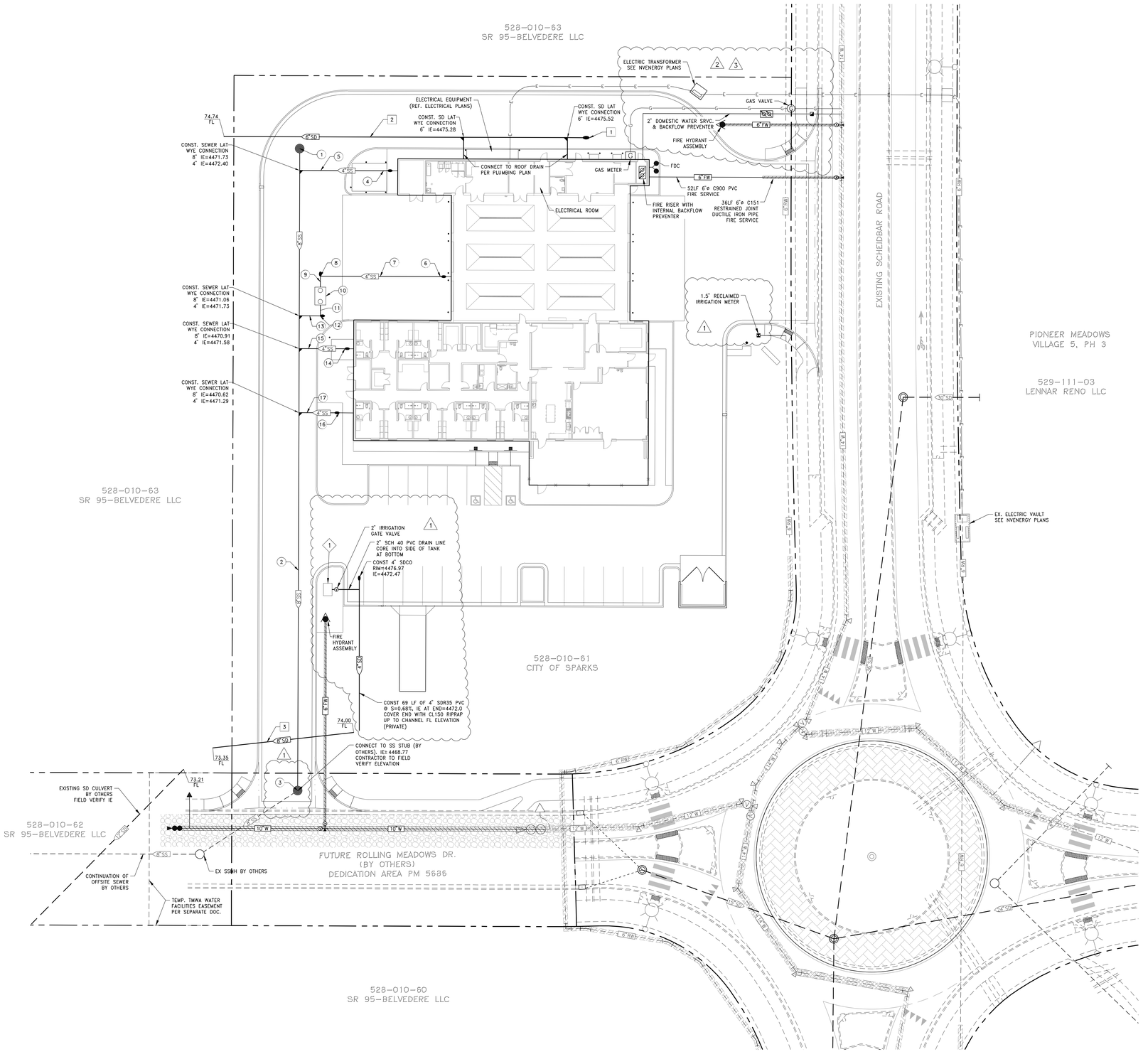

20' 10' 0 20'

SCALE: 1" = 20'

NOTES:

1. ALL STREETS ARE PUBLIC UNLESS NOTED OTHERWISE.
2. ALL STORM DRAIN IS PUBLIC UNLESS NOTED OTHERWISE.
3. ALL SANITARY SEWER IS PUBLIC UNLESS NOTED OTHERWISE. SEWER PIPE TO BE PVC SDR35 UNLESS NOTED OTHERWISE.
4. TMWA WATER FACILITIES EXTEND TO AND INCLUDE THE METER ON DOMESTIC SERVICE. ALL WATER DOWN STREAM OF THE METER IS CITY OF SPARKS. TMWA WATER FACILITIES EXTEND TO AND INCLUDE THE TAPPING SLEEVE OR TEE AND VALVE ON FIRE SERVICES AND FIRE HYDRANTS. ALL WATER DOWN STREAM OF THE VALVE ON FIRE SERVICE AND FIRE HYDRANTS IS CITY OF SPARKS. SEE TMWA PLANS FOR MATERIALS OF TMWA WATER FACILITIES. (3)
5. CITY OF SPARKS WATER MATERIALS SHALL BE:
   - 5.1. AWWA C901 CTS HDPE FOR DOMESTIC SERVICE
   - 5.2. AWWA C900 PVC OR AWWA C151 RESTRAINED JOINT DUCTILE IRON PIPE PER PLAN LOCATION FOR FIRE SERVICE
   - 5.3. ALL MATERIALS FOR CITY OF SPARKS FIRE HYDRANTS SHALL CONFORM TO SPARKS STANDARD DETAILS S-301A THROUGH S-301D
6. MAINTAIN 10' MINIMUM SEPARATION FROM FIRE HYDRANT BARREL TO ANY SEWER OR STORM DRAIN
7. CONTRACTOR SHALL COORDINATE THE RECLAIMED IRRIGATION CONNECTION WITH KEVIN PORTER, P.E., UTILITY MANAGER AT 775-353-7864 OR KPORTER@CITYOFSPARKS.US (1)

LEGEND:

D.E.	DRAINAGE EASEMENT
S.S.E.	SANITARY SEWER EASEMENT
R=XX'	RADIUS

REFERENCE TMWA W SHEETS FOR PLAN VIEW WATER SYSTEM IMPROVEMENTS.

ELECTRIC AND GAS TO BUILDING SHOWN FOR REFERENCE ONLY ELECTRIC AND GAS TO BUILDING SHALL CONFORM TO PLANS BY NVEnergy

STORM DRAIN NOTES:

1. CONST. 4" SDCO RIM=4478.24 INV.=4475.57 (1)
2. CONST. 168 LF OF 6" PVC SDR35 DRAIN PIPE S=0.5% (PRIVATE) FL(IN)=4475.52 FL(OUT)=4474.74
3. CONST. 65 LF OF 8" PVC SDR35 DRAIN PIPE S=1.0% (PRIVATE) FL(IN)=4474.00 FL(OUT)=4473.35

SEWER NOTES:

1. CONST. 48" ø TYPE 1 SSMH RIM=4477.51 INV.=4471.83 (OUT)
2. CONST. 295 LF OF 8" SDR35 PVC SEWER PIPE S=1.0% (PRIVATE)
3. CONST. 48" ø TYPE 1 SSMH WITH ECCENTRIC CONE ROTATE CONE AWAY FROM VALLEY GUTTER RIM=4475.66 INV.=4468.89 (IN) INV.=4468.79 (OUT)
4. CONST. 4" SSCO RIM=4478.72 INV.=4473.90
5. CONST. 42 LF OF 4" SDR35 PVC SEWER PIPE S=3.5% (PRIVATE)
6. CONST. 4" SSCO RIM=4478.87 INV.=4475.07
7. CONST. 58 LF OF 4" SDR35 PVC SEWER PIPE S=4.7% (PRIVATE)
8. CONST. 4" SSCO RIM=4477.99 INV.=4472.39
9. CONST. 5 LF OF 4" SDR35 PVC SEWER PIPE S=2.0% (PRIVATE)
10. CONST. 1000 GAL SAND OIL INTERCEPTOR RIM=4478.01 INV.=4472.29 (IN) INV.=4472.04 (OUT)
11. CONST. 5 LF OF 4" SDR35 PVC SEWER PIPE S=2.0% (PRIVATE)
12. CONST. 4" SSCO RIM=4478.11 INV.=4471.94
13. CONST. 10 LF OF 4" SDR35 PVC SEWER PIPE S=2.2% (PRIVATE)
14. CONST. 4" SSCO RIM=4478.87 INV.=4473.90
15. CONST. 23 LF OF 4" SDR35 PVC SEWER PIPE S=10.1% (PRIVATE)
16. CONST. 4" SSCO RIM=4478.76 INV.=4474.65
17. CONST. 18 LF OF 4" SDR35 PVC SEWER PIPE S=18.2% (PRIVATE)

MISC. UTILITY KEYNOTES (5)

1. 3'x5'x4' PRECAST DRAFT TRAINING TANK
   JENSEN PRECAST MODEL 5660-U-48
   WITH 3'x5' TRAFFIC RATED HINGED ACCESS COVER
   TOP OF ACCESS COVER = 4477.45
   OUTSIDE BOTTOM OF BOX = 4472.70
   INSIDE BOTTOM OF BOX = 4473.20

CITY OF SPARKS APPROVAL

1/5/2024

JON R. ERICSON, P.E., PTOE
City Engineer

tsk

225 South Arlington Avenue,
Suite A
Reno NV, 89501
phone: 775.857.2949
fax: 775.857.2403
www.tska.com

THESE DRAWINGS AND SPECIFICATIONS ARE THE PROPERTY OF TATE SNYDER KIMSEY ARCHITECTS AND MAY NOT BE REPRODUCED OR USED FOR ANY PURPOSE WITHOUT THE ARCHITECTS WRITTEN CONSENT. AS INSTRUMENTS OF SERVICE, THESE DOCUMENTS ARE NOT FINAL AND READY FOR USE, AND THEREFORE NOT VALID, UNLESS THEY ARE SEALED, SIGNED AND DATED.

Copyright, Ltd 2023

Consultant

WOOD RODGERS
BUILDING RELATIONSHIPS ONE PROJECT AT A TIME
1361 Corporate Boulevard
Reno, NV 89502
Tel 775.823.4068
Fax 775.823.4066

PLEASE RECYCLE

Project

SPARKS Fire Station #6

6963 SCHEIDBAR ROAD
SPARKS, NEVADA 89436

Job No: 22-043

Owner

CITY OF SPARKS

MATTHEW J. ROULIAS
Exp: 12-31-25
CIVIL
No. 18708
STATE OF NEVADA
01/04/2024

BID SET

REVISIONS

REV	DATE	DESCRIPTION
1	05/31/23	CITY COMMENT REVISIONS
2	08/21/23	TMWA & NVEnergy REVISIONS
3	09/20/23	TMWA & NVEnergy REVISIONS
4	10/17/23	ADDED NEW PARCELS FROM PM 5686
5	01/03/24	BID SET REVIEW & COORDINATION

Sheet Title

UTILITY PLAN

Date: APRIL 12, 2023

Sheet No:

U-1

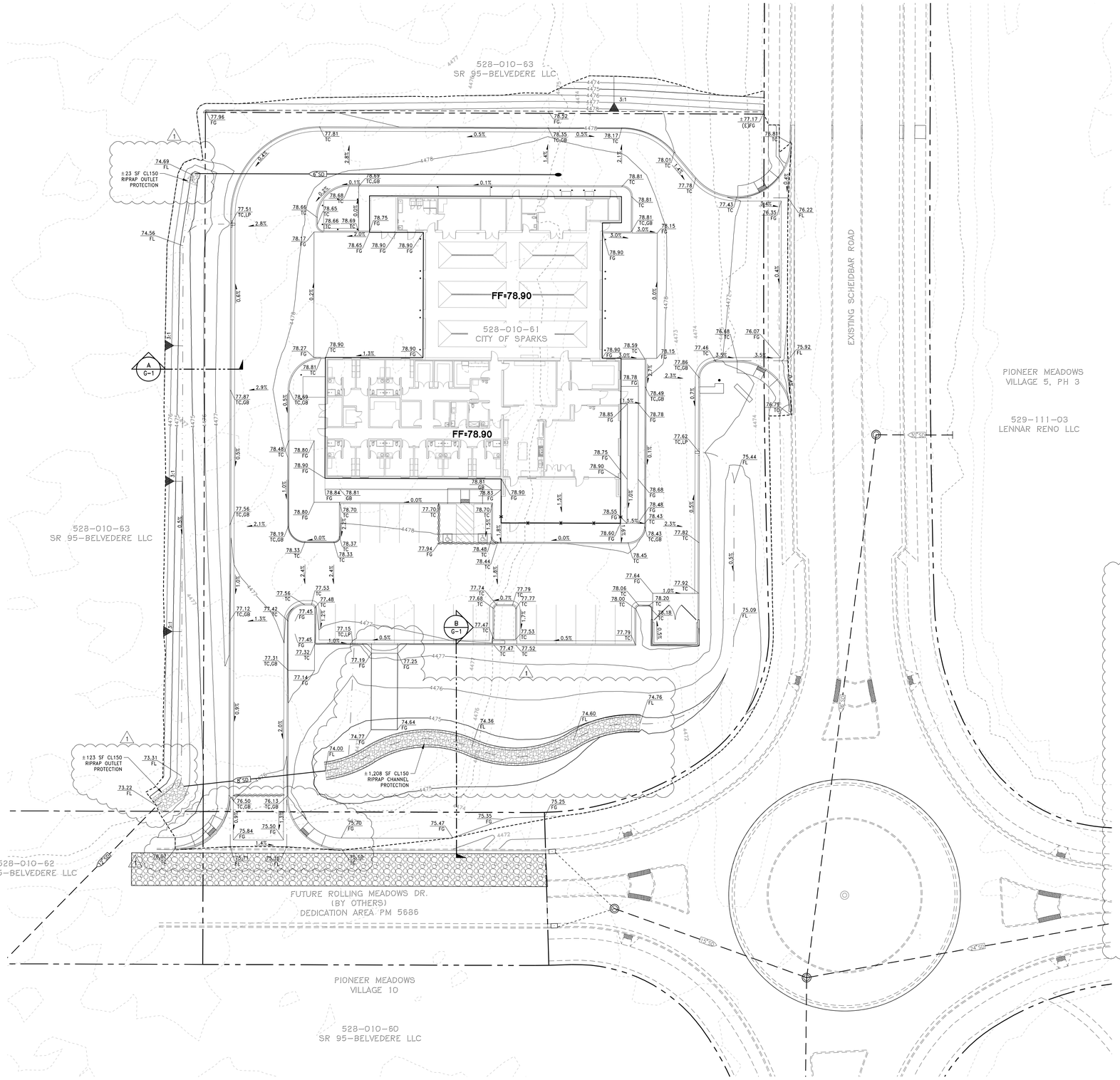

20' 10' 0 20'

SCALE: 1" = 20'

LEGEND:

- GRADE BREAK
- SWALE FLOW LINE
- SAWCUT LINE
- LIMITS OF GRADING

GRADING NOTES:

1. CONTRACTOR TO USE EXTREME CAUTION WHEN WORKING AROUND EXISTING UNDERGROUND UTILITIES. SEE NV ENERGY AND AT&T PLANS FOR PROPOSED ELECTRIC AND TELEPHONE UNDERGROUND UTILITY LOCATIONS.
2. REFERENCE GEOTECHNICAL INVESTIGATION FOR SUBGRADE PREPARATION, OVER-EXCAVATION, PAD PREPARATION AND STRUCTURAL FILL REQUIREMENTS.
3. CONTRACTOR TO GRADE LS AREAS TO DRAIN TO LS INLETS, CURB CUTS, OR ACROSS SIDEWALKS, AWAY FROM BUILDINGS.
4. ALL STORM DRAIN IMPROVEMENTS ARE PRIVATE UNLESS NOTED OTHERWISE.
5. ADD 4300' TO ALL ELEVATIONS.
6. CONTOURS ARE SHOWN AT 1' AND 5' INTERVALS.
7. "TC" ELEVATIONS AT CURB RAMPS ARE PROJECTED UP TO FULL HEIGHT CURB ELEVATION.

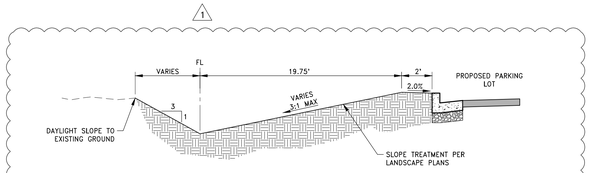

SECTION A, WEST CHANNEL

NOT TO SCALE

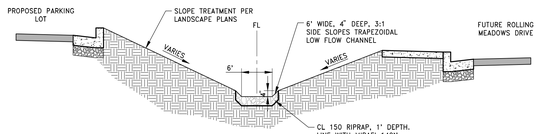

SECTION B, SOUTH CHANNEL

NOT TO SCALE

CITY OF SPARKS APPROVAL

1/5/2024

JON R. ERICSON, P.E., PTOE
City Engineer

tsk

225 South Arlington Avenue,
Suite A
Reno NV, 89501
phone: 775.857.2949
fax: 775.857.2403
www.tska.com

THESE DRAWINGS AND SPECIFICATIONS ARE THE PROPERTY OF TATE SNYDER KIMSEY ARCHITECTS AND MAY NOT BE REPRODUCED OR USED FOR ANY PURPOSE WITHOUT THE ARCHITECTS WRITTEN CONSENT. AS INSTRUMENTS OF SERVICE, THESE DOCUMENTS ARE NOT FINAL AND READY FOR USE, AND THEREFORE NOT VALID, UNLESS THEY ARE SEALED, SIGNED AND DATED.

Copyright, Ltd 2023

Consultant

WOOD RODGERS
BUILDING RELATIONSHIPS ONE PROJECT AT A TIME
1361 Corporate Boulevard
Reno, NV 89502
Tel 775.823.4068
Fax 775.823.4066

PLEASE RECYCLE

Project

SPARKS Fire Station #6

6963 SCHEIDBAR ROAD
SPARKS, NEVADA 89436

Job No: 22-043

Owner

CITY OF SPARKS

MATTHEW J. ROULIAS
Exp 12-31-25
CIVIL
No. 18708
PROFESSIONAL ENGINEER
STATE OF NEVADA

01/04/2024

BID SET

REVISIONS

REV	DATE	DESCRIPTION
1	05/31/23	CITY COMMENT REVISIONS
2	08/21/23	TWWA & NVEnergy REVISIONS
3	09/20/23	TWWA & NVEnergy REVISIONS
4	10/17/23	ADDED NEW PARCELS FROM PM 5686
5	01/03/24	BID SET REVIEW & COORDINATION

Sheet Title

GRADING PLAN

Date: APRIL 12, 2023

Sheet No:

G-1

TYPICAL PAVEMENT SECTIONS

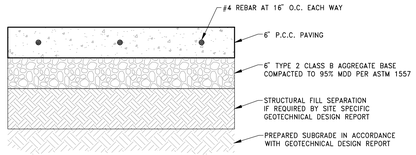

NOTES:

1. PORTLAND CEMENT CONCRETE (PCC) SHALL CONFORM TO THE MINIMUM SPECIFICATIONS ON THIS SHEET.
2. WEAKENED PLANE JOINTS SHALL BE CONSTRUCTED AT 10' O.C. MAX EACH WAY (SEE WEAKENED PLANE JOINT DETAIL)
3. TRASH ENCLOSURE SLAB AND APRON SHALL HAVE #4 REBAR @ 16" O.C. EACH WAY

P.C.C. TRASH ENCLOSURE SLAB/APRON (PRIVATE)

N.T.S.

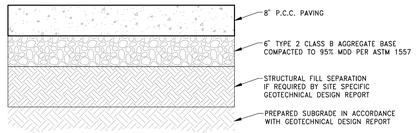

NOTES:

1. PORTLAND CEMENT CONCRETE (PCC) SHALL CONFORM TO THE MINIMUM SPECIFICATIONS ON THIS SHEET.
2. WEAKENED PLANE JOINTS SHALL BE CONSTRUCTED AT 10' O.C. MAX EACH WAY (SEE WEAKENED PLANE JOINT DETAIL)
3. TRASH ENCLOSURE SLAB AND APRON SHALL HAVE #4 REBAR @ 16" O.C. EACH WAY

P.C.C. FIRE TRUCK BAY APRON (PRIVATE)

N.T.S.

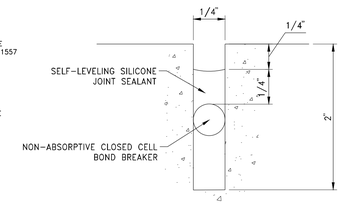

VEHICULAR PCC WEAKENED PLANE JOINT

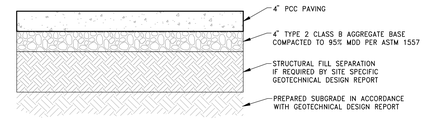

NOTES:

1. PORTLAND CEMENT CONCRETE (PCC) SHALL CONFORM TO THE MINIMUM SPECIFICATIONS ON THIS SHEET.
2. TRANSVERSE WEAKENED PLANE JOINTS SHALL BE CONSTRUCTED AT 10' O.C. EACH WAY IN LARGE FLATWORK AREAS, AT A MAXIMUM DISTANCE EQUAL TO THE WALKWAY WIDTH IF WALK IS BETWEEN 5' AND 10' OR AT 5' O.C. MAX IF WALKWAY IS LESS THAN 5' WIDE.
3. PROVIDE EXPANSION JOINT EVERY 50' AND AT ADJOINING TO EXISTING PCC

TYPICAL PCC WALK/FLATWORK SECTION (NOT SUBJECT TO VEHICULAR TRAFFIC) (PRIVATE)

N.T.S.

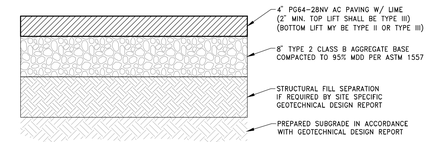

AC MIX DESIGN NOTE:
THE PLANTMIX BITUMINOUS PAVEMENT SHALL BE 50-BLOW, MARSHALL MIX DESIGN WITH 3% AIR VOIDS USING PG64-28NV ASPHALT CEMENT. AGGREGATES SHALL BE PRE-MARINATED WITH LIME AT A RATE OF 1.5% OF THE WEIGHT OF VIRGIN AGGREGATE AND PER NDOT SPECIFICATIONS. RECYCLED ASPHALT PAVEMENT (RAP) UP TO 15% WILL BE ALLOWED; HOWEVER, ALL VIRGIN AGGREGATES WILL BE SUBJECT TO LIME PRE-MARINATING PER NDOT SPECIFICATION.

TYPICAL AC PAVEMENT SECTION (PRIVATE)

N.T.S.

PORTLAND CEMENT CONCRETE (PCC) SHALL HAVE THE FOLLOWING CHARACTERISTICS:

- 4000 PSI MIN. COMPRESSIVE STRENGTH AT 28 DAYS.
- MIN. OF 6 SACKS OF CEMENT PER CUBIC YARD.
- MAX. WATER-CEMENT RATION OF 0.45.
- 6% AIR ENTRAINMENT +/- 1.5%.
- SLUMP BETWEEN 1" AND 4".
- MIX DESIGN SHALL CONFORM TO SECTION 337 OF STANDARD SPECIFICATION FOR PUBLIC WORKS CONSTRUCTION (SSPWC) (ORANGE BOOK).
- CEMENT SHALL BE TYPE II & MAY REQUIRE THE ADDITION OF POZZOLAN OR FLYASH IF RECOMMENDED BY THE SITE SPECIFIC GEOTECHNICAL DESIGN REPORT.
- COARSE AGGREGATE GRADATION SHALL CONFORM TO SIZE No. 67.
- POLY PROPYLENE OR CELLULOSE FIBERS SHALL BE ADDED TO THE PCC AT 1.5 LBS. PER CUBIC YARD.
- ALL MATERIALS SHALL CONFORM TO SSPWC.

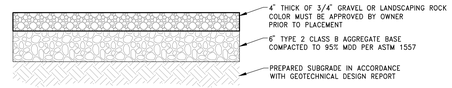

LANDSCAPE MAINTENANCE ACCESS RD (PRIVATE)

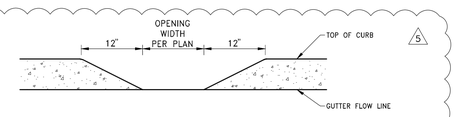

CURB OPENING (PRIVATE)

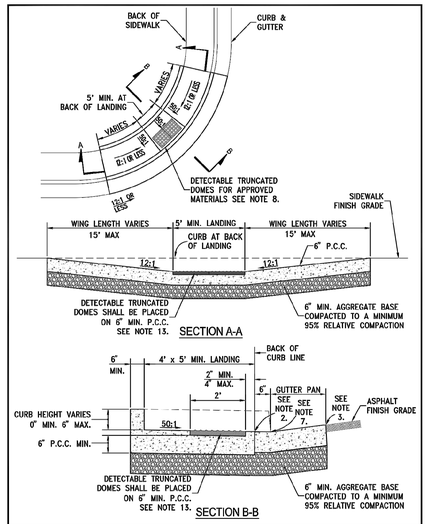

STANDARD DETAILS FOR PUBLIC WORKS CONSTRUCTION		DRAWING No.
City of Sparks	PEDESTRIAN RAMP - EXISTING SIDEWALKS	S-106A
		APPROVED BY: JE DATE: 1/2020

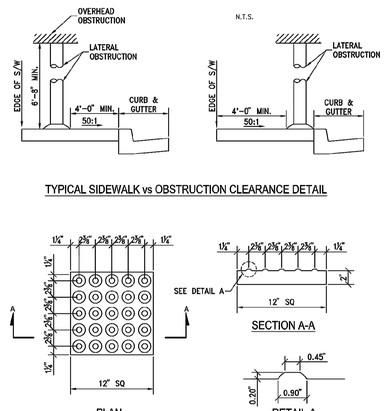

STANDARD DETAILS FOR PUBLIC WORKS CONSTRUCTION		DRAWING No.
City of Sparks	PEDESTRIAN RAMP - DETAILS	S-106F
		APPROVED BY: JE DATE: 1/2020

1. STORM DRAIN INLETS OR SIMILAR ACCESSES SHALL NOT BE LOCATED IN THE AREA AT THE BASE OF THE CURB RAMP OR LANDING AREA. IF OBSTRUCTIONS SUCH AS INLETS, UTILITY POLES, PULL BOXES, FIRE HYDRANTS, ETC. ARE ENCOUNTERED, THE LOCATION AND DIMENSIONS MAY BE ADJUSTED UPON APPROVAL OF THE CITY ENGINEER.
2. NO LIP SHALL BE PERMITTED AT THE CURB RAMP SLOPE TO GUTTER PAN.
3. PLANTMIX BITUMINOUS SURFACE SHALL BE FLUSH WITH THE EDGE OF THE GUTTER PAN IN THE AREA OF THE CURB RAMP.
4. ROUGH BROOM TEXTURE ON CURB RAMPS AND WINGS.
5. DETECTABLE WARNING SHALL BE INSTALLED PER MANUFACTURER'S RECOMMENDATIONS AND SHALL BE PLACED ON MIN. SIX (6") INCHES OF P.C.C.
6. ALL SLOPE RATES ARE RELATIVE TO LEVEL AND SHALL COMPLY WITH THE PUBLIC RIGHT-OF-WAY ACCESSIBILITY GUIDELINES (PROWAG) STANDARDS.
7. GUTTER SHALL MAINTAIN POSITIVE DRAINAGE TO PREVENT PONDING.
8. DETECTABLE WARNING SHALL CONSIST OF PRECAST WETSET TILES WITH MIN. SIZE OF 2' X 2', COLOR YELLOW. APPROVED PRODUCTS INCLUDE: "CASTINTACT 3", "TEKWAY DOME-TILES", AND "ACCESS TILE". DETECTABLE WARNING SURFACES SHALL EXTEND THE FULL WIDTH OF THE RAMP RUN (EXCLUDING ANY FLARED SIDES), BLENDED TRANSITION, OR TURNING SPACE. DETECTABLE WARNING SHALL BE CONSTRUCTED PER MANUFACTURER'S INSTALLATION GUIDELINES AND CONFORM TO ADAAG.
9. CONCRETE REMOVAL SHALL BE TO NEAT SAW CUT LINES
10. AGGREGATE BASE MATERIAL UNDER PEDESTRIAN RAMPS SHALL BE TYPE 2, CLASS B CRUSHED AGGREGATE BASE. MATERIALS SHALL CONFORM TO SSPWC SECTION 200, AS ADOPTED BY CITY COUNCIL.
11. PORTLAND CEMENT CONCRETE (P.C.C.) SHALL HAVE THE FOLLOWING CHARACTERISTICS: 4000 PSI MIN. COMPRESSIVE STRENGTH AT 28 DAYS, MIN. 6 SACKS OF CEMENT PER CUBIC YARD WITH MAX. WATER-CEMENT RATIO OF 0.45, AIR ENTRAINMENT 6% ±1.5%, SLUMP AT 1 TO 4 INCHES. MIX DESIGN SHALL CONFORM TO THE REQUIREMENTS OF SECTION 337 OF STANDARD SPECIFICATIONS OF PUBLIC WORKS CONSTRUCTION (SSPWC), AS ADOPTED BY CITY COUNCIL. CEMENT SHALL BE TYPE II. ALL CEMENT CONCRETE SHALL HAVE A COARSE AGGREGATE GRADATION CONFORMING TO SIZE No. 67. POLYPROPYLENE OR CELLULOSE FIBERS SHALL BE ADDED TO THE P.C.C. AT 1.5 LBS. PER CUBIC YARD. ALL MATERIALS SHALL CONFORM TO SSPWC, AS ADOPTED BY CITY COUNCIL.
12. CONTRACTORS SHALL CORRECT ANY GRADE CONFLICT WITH EXISTING BOXES. THE CITY ENGINEER SHALL MAKE THE FINAL DETERMINATION REGARDING THE DEGREE OF MODIFICATIONS REQUIRED BY THE CONTRACTOR FOR GRADE CONFLICTS BETWEEN EXISTING BOXES AND NEW PEDESTRIAN RAMPS.
13. SIDEWALK AT BOTH SIDES OF RAMP MAY BE RECONSTRUCTED TO MINIMIZE THE GRADE AT A HORIZONTAL DISTANCE TO BE DETERMINED IN THE FIELD, UPON APPROVAL OF THE CITY ENGINEER, SUBJECT TO PROWAG REQUIREMENTS. CURB AT THE BACK OF WALK MAY BE NEEDED. A TRANSITION SECTION OF SIDEWALK MAY BE NECESSARY TO MATCH CROSS SLOPE OF EXISTING SIDEWALK TO PEDESTRIAN RAMP IMPROVEMENTS. TRANSITION SECTIONS SHALL BE APPROVED BY THE ENGINEER PRIOR TO INSTALLATION.

STANDARD DETAILS FOR PUBLIC WORKS CONSTRUCTION		DRAWING No.
City of Sparks	NOTES - PEDESTRIAN RAMP	S-106G
		APPROVED BY: JE DATE: 1/2020

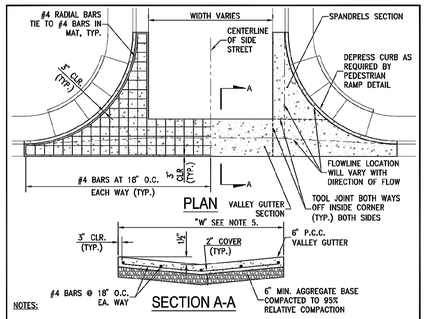

NOTES:

1. PORTLAND CEMENT CONCRETE (P.C.C.) SHALL HAVE THE FOLLOWING CHARACTERISTICS: 4000 PSI MIN. COMPRESSIVE STRENGTH AT 28 DAYS, MIN. 6 SACKS OF CEMENT PER CUBIC YARD WITH MAX. WATER-CEMENT RATIO OF 0.45, AIR ENTRAINMENT 6% ±1.5%, SLUMP AT 1 TO 4 INCHES. MIX DESIGN SHALL CONFORM TO THE REQUIREMENTS OF SECTION 337 OF STANDARD SPECIFICATIONS OF PUBLIC WORKS CONSTRUCTION (SSPWC), AS ADOPTED BY CITY COUNCIL. CEMENT SHALL BE TYPE II. ALL CEMENT CONCRETE SHALL HAVE A COARSE AGGREGATE GRADATION CONFORMING TO SIZE No. 67. POLYPROPYLENE OR CELLULOSE FIBERS SHALL BE ADDED TO THE P.C.C. AT 1.5 LBS. PER CUBIC YARD. ALL MATERIALS SHALL CONFORM TO SSPWC, AS ADOPTED BY CITY COUNCIL
2. AGGREGATE BASE UNDER VALLEY GUTTER AND SPANDRELS SHALL BE TYPE 2, CLASS B CRUSHED AGGREGATE. ALL MATERIALS SHALL CONFORM TO SSPWC SECTION 200, AS ADOPTED BY CITY COUNCIL.
3. P.C.C VALLEY GUTTER DETAIL FOR RESIDENTIAL OR COMMERCIAL ZONES ONLY FOR OTHER APPLICATIONS AN ENGINEERED DESIGN IS REQUIRED.
4. VALLEY GUTTER SHALL HAVE WEAKENED PLANE JOINTS EVERY 10 FEET.
5. LOCAL AND COLLECTOR STREETS, "W"=6' MIN. ARTERIAL STREETS (DRIVEWAYS ONLY), "W"=10' MIN.
6. VALLEY GUTTER SECTIONS (SPANDRELS) ALONG CURB & GUTTER MAY BE A MONOLITHIC POUR AS SHOWN. DOWELS MATCHING REBAR SPACING SHOWN ARE REQUIRED FROM VALLEY GUTTER SECTION TO SPANDREL SECTION IF POURED SEPARATELY.

STANDARD DETAILS FOR PUBLIC WORKS CONSTRUCTION		DRAWING No.
City of Sparks	P.C.C. VALLEY GUTTER	S-107
		APPROVED BY: JE DATE: 1/2020

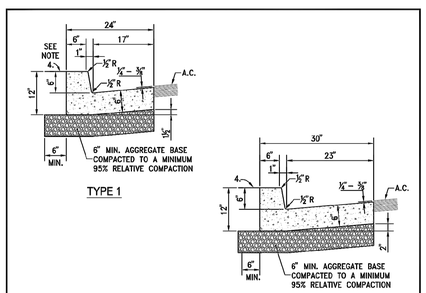

NOTES:

1. PORTLAND CEMENT CONCRETE (P.C.C.) SHALL HAVE THE FOLLOWING CHARACTERISTICS: 4000 PSI MIN. COMPRESSIVE STRENGTH AT 28 DAYS, MIN. 6 SACKS OF CEMENT PER CUBIC YARD WITH MAX. WATER-CEMENT RATIO OF 0.45, AIR ENTRAINMENT 6% ±1.5%, SLUMP AT 1 TO 4 INCHES. MIX DESIGN SHALL CONFORM TO THE REQUIREMENTS OF SECTION 337 OF STANDARD SPECIFICATIONS OF PUBLIC WORKS CONSTRUCTION (SSPWC), AS ADOPTED BY CITY COUNCIL. CEMENT SHALL BE TYPE II. ALL CEMENT CONCRETE SHALL HAVE A COARSE AGGREGATE GRADATION CONFORMING TO SIZE No. 67. POLYPROPYLENE OR CELLULOSE FIBERS SHALL BE ADDED TO THE P.C.C. AT 1.5 LBS. PER CUBIC YARD. ALL MATERIALS SHALL CONFORM TO SSPWC, AS ADOPTED BY CITY COUNCIL.
2. AGGREGATE BASE MATERIAL UNDER AND BEHIND CURB AND GUTTER SHALL BE TYPE 2, CLASS B CRUSHED AGGREGATE BASE. MATERIALS SHALL CONFORM TO SSPWC SECTION 200, AS ADOPTED BY CITY COUNCIL.
3. WEAKENED PLANE JOINTS SHALL BE EVERY 10 FEET AND LOCATED ON THE BACK, TOP AND FACE OF THE CURB AND THE TOP OF THE GUTTER PAN.
4. CURB & GUTTER SECTIONS SHALL BE PLACED SEPARATELY FROM SIDEWALK SECTIONS. WHEN SIDEWALK IS NOT REQUIRED DIRECTLY BEHIND THE CURB, BACKFILL TO TOP OF CURB FOR A HORIZONTAL DISTANCE OF 12" FROM BACK FACE OF CURB AND COMPACT TO 90% RELATIVE COMPACTION.
5. FOR REPLACEMENT OF EXISTING CURB AND GUTTER, MATCH EXISTING TYPE.

STANDARD DETAILS FOR PUBLIC WORKS CONSTRUCTION		DRAWING No.
City of Sparks	P.C.C. CURB & GUTTER	S-109
		APPROVED BY: JE DATE: 1/2020

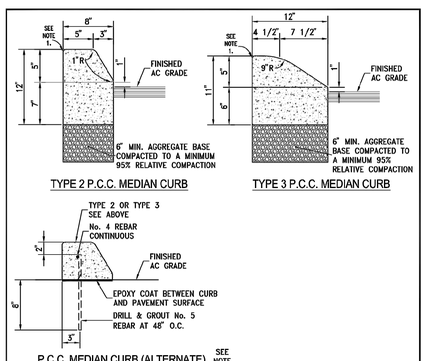

NOTES:

1. RADIUS TO BE 1/2 INCH, OMIT ROUNDING IF CURBS ARE BACK TO BACK.
2. PORTLAND CEMENT CONCRETE (P.C.C.) SHALL HAVE THE FOLLOWING CHARACTERISTICS: 4000 PSI MIN. COMPRESSIVE STRENGTH AT 28 DAYS, MIN. 6 SACKS OF CEMENT PER CUBIC YARD WITH MAX. WATER-CEMENT RATIO OF 0.45, AIR ENTRAINMENT 6% ±1.5%, SLUMP AT 1 TO 4 INCHES. MIX DESIGN SHALL CONFORM TO THE REQUIREMENTS OF SECTION 337 OF STANDARD SPECIFICATIONS OF PUBLIC WORKS CONSTRUCTION (SSPWC), AS ADOPTED BY CITY COUNCIL. CEMENT SHALL BE TYPE II. ALL CEMENT CONCRETE SHALL HAVE A COARSE AGGREGATE GRADATION CONFORMING TO SIZE No. 67. POLYPROPYLENE OR CELLULOSE FIBERS SHALL BE ADDED TO THE P.C.C. AT 1.5 LBS. PER CUBIC YARD. ALL MATERIALS SHALL CONFORM TO SSPWC, AS ADOPTED BY CITY COUNCIL.
3. AGGREGATE BASE MATERIAL UNDER MEDIAN CURBS SHALL BE TYPE 2, CLASS B CRUSHED AGGREGATE BASE. MATERIALS SHALL CONFORM TO SSPWC SECTION 200, AS ADOPTED BY CITY COUNCIL.
4. GLUE DOWN MAY BE ALLOWED WITH APPROVAL OF THE CITY ENGINEER.

STANDARD DETAILS FOR PUBLIC WORKS CONSTRUCTION		DRAWING No.
City of Sparks	P.C.C. MEDIAN CURBS	S-110
		APPROVED BY: JE DATE: 1/2020

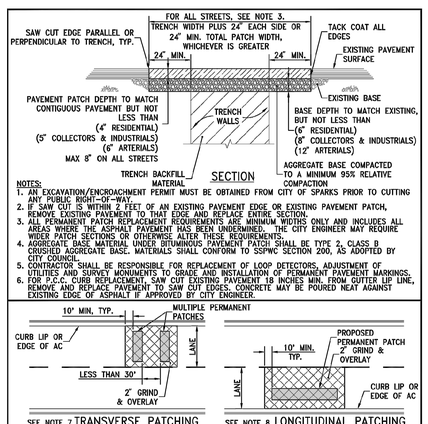

NOTES:

1. AN EXCAVATION/ENCROACHMENT PERMIT MUST BE OBTAINED FROM CITY OF SPARKS PRIOR TO CUTTING ANY PUBLIC RIGHT-OF-WAY.
2. IF SAW CUT IS WITHIN 2 FEET OF AN EXISTING PAVEMENT EDGE OR EXISTING PAVEMENT PATCH, REMOVE EXISTING PAVEMENT TO THAT EDGE AND REPLACE ENTIRE SECTION.
3. ALL PERMANENT PATCH REPLACEMENT REQUIREMENTS ARE MINIMUM WIDTHS ONLY AND INCLUDES ALL AREAS WHERE THE ASPHALT PAVEMENT HAS BEEN UNDERMINED. THE CITY ENGINEER MAY REQUIRE WIDER PATCH SECTIONS OR OTHERWISE ALTER THESE REQUIREMENTS.
4. AGGREGATE BASE MATERIAL UNDER BITUMINOUS PAVEMENT PATCH SHALL BE TYPE 2, CLASS B CRUSHED AGGREGATE BASE. MATERIALS SHALL CONFORM TO SSPWC SECTION 200, AS ADOPTED BY CITY COUNCIL.
5. CONTRACTOR SHALL BE RESPONSIBLE FOR REPLACEMENT OF LOOP DETECTORS, ADJUSTMENT OF UTILITIES AND SURVEY MONUMENTS TO GRADE AND INSTALLATION OF PERMANENT PAVEMENT MARKINGS.
6. FOR P.C.C. CURB REPLACEMENT, SAW CUT EXISTING PAVEMENT 18 INCHES MIN. FROM GUTTER LIP LINE, REMOVE AND REPLACE PAVEMENT TO SAW CUT EDGES. CONCRETE MAY BE POURED NEAT AGAINST EXISTING EDGE OF ASPHALT IF APPROVED BY CITY ENGINEER.

ALL STREETS WITH PAVEMENT CONDITION INDEX (PCI) GREATER THAN 65:

7. TRANSVERSE PATCHES SHALL INCLUDE A GRIND AND OVERLAY WHEREVER THERE ARE MULTIPLE PATCHES WITHIN 30 FEET OF EACH OTHER. 2" MINIMUM FOR RESIDENTIAL, COLLECTORS & INDUSTRIALS. 3" MINIMUM FOR ARTERIALS.
8. LONGITUDINAL PATCHES SHALL INCLUDE GRIND AND OVERLAY TO THE LANE LINES (BIKE, PARKING, OR TRAVEL). 2" MINIMUM FOR RESIDENTIAL, COLLECTORS & INDUSTRIALS. 3" MINIMUM FOR ARTERIALS.
9. DRIVEWAY & INTERSECTION LIMITS TO BE DETERMINED BY STREET CUT COORDINATOR.

STANDARD DETAILS FOR PUBLIC WORKS CONSTRUCTION		DRAWING No.
City of Sparks	PERMANENT BITUMINOUS PAVEMENT PATCH	S-115
		APPROVED BY: JE DATE: 1/2020

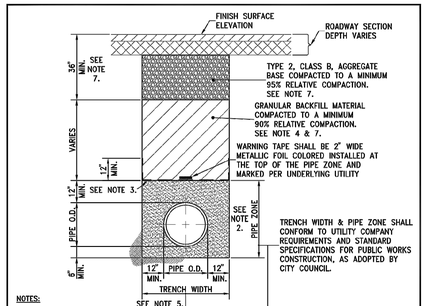

NOTES:

1. ALL MATERIALS AND INSTALLATION PROCEDURES SHALL BE IN ACCORDANCE WITH STANDARD SPECIFICATIONS FOR PUBLIC WORKS CONSTRUCTION (SSPWC), AS ADOPTED BY CITY COUNCIL.
2. BEDDING MATERIAL SHALL CONFORM TO OWNING-UTILITY COMPANY REQUIREMENTS AS APPROVED BY THE CITY OF SPARKS. FOR CITY-OWNED UTILITIES, BEDDING MATERIAL SHALL BE CLASS A OR C, COMPACTED TO MINIMUM 90% RELATIVE COMPACTION. MATERIALS SHALL CONFORM TO SSPWC SECTION 200, AS ADOPTED BY CITY COUNCIL.
3. CLASS C BEDDING REQUIRES INSTALLATION OF GEOTEXTILE FABRIC BETWEEN PIPE ZONE AND BACKFILL MATERIAL. GEOTEXTILE FABRIC SHALL BE MIRAFI 180N OR APPROVED EQUAL.
4. BACKFILL MATERIAL SHALL BE TYPE 2, CLASS B OR CLASS E AND COMPACTED TO MINIMUM 90% RELATIVE COMPACTION. MATERIALS SHALL CONFORM TO SSPWC SECTION 200, AS ADOPTED BY CITY COUNCIL.
5. ALL EXCAVATIONS SHALL CONFORM TO THE LATEST O.S.H.A. REQUIREMENTS.
6. EXISTING PIPE TO BE ABANDONED SHALL BE GROUT FILLED OR COMPLETELY REMOVED.
7. MINIMUM BACKFILL DEPTH REQUIREMENT IS FOR TRENCHING IN EXISTING PAVED STREETS. TRENCHING FOR NEW DEVELOPMENT WHERE STREETS HAVE NOT YET BEEN CONSTRUCTED, BACKFILL MATERIAL SHALL BE TYPE 2, CLASS B OR CLASS E AND COMPACTED TO MINIMUM 90% RELATIVE COMPACTION. MATERIALS SHALL CONFORM TO SSPWC SECTION 200, AS ADOPTED BY CITY COUNCIL.

STANDARD DETAILS FOR PUBLIC WORKS CONSTRUCTION		DRAWING No.
City of Sparks	TRENCH EXCAVATION/BACKFILL	S-117
		APPROVED BY: JE DATE: 1/2020

CITY OF SPARKS APPROVAL
1/5/24
JON R. ERICSON, P.E., PTOE
City Engineer

tsk
225 South Arlington Avenue,
Suite A
Reno NV, 89501
phone: 775.857.2949
fax: 775.857.2403
www.tska.com

THESE DRAWINGS AND SPECIFICATIONS ARE THE PROPERTY OF TATE SNYDER KIMSEY ARCHITECTS AND MAY NOT BE REPRODUCED OR USED FOR ANY PURPOSE WITHOUT THE ARCHITECTS WRITTEN CONSENT. AS INSTRUMENTS OF SERVICE, THESE DOCUMENTS ARE NOT FINAL AND READY FOR USE, AND THEREFORE NOT VALID, UNLESS THEY ARE SEALED, SIGNED AND DATED.

Copyright, Ltd 2023

Consultant

WOOD RODGERS
BUILDING RELATIONSHIPS ONE PROJECT AT A TIME
1361 Corporate Boulevard Reno, NV 89502
Tel 775.823.4068 Fax 775.823.4066

PLEASE RECYCLE

Project
SPARKS Fire Station #6

6963 SCHEIDBAR ROAD SPARKS, NEVADA 89436

Job No: 22-043

Owner
CITY OF SPARKS

MATTHEW J. ROULIAS
Exp 12-31-25
CIVIL
18708
01/04/2024

BID SET

REVISIONS

REV	DATE	DESCRIPTION
1	05/31/23	CITY COMMENT REVISIONS
2	08/21/23	TWWA & NVEnergy REVISIONS
3	09/20/23	TWWA & NVEnergy REVISIONS
4	10/17/23	ADDED NEW PARCELS FROM PM 5686
5	01/03/24	BID SET REVIEW & COORDINATION

Sheet Title
DETAIL SHEET

Date: APRIL 12, 2023
Sheet No:
D-1

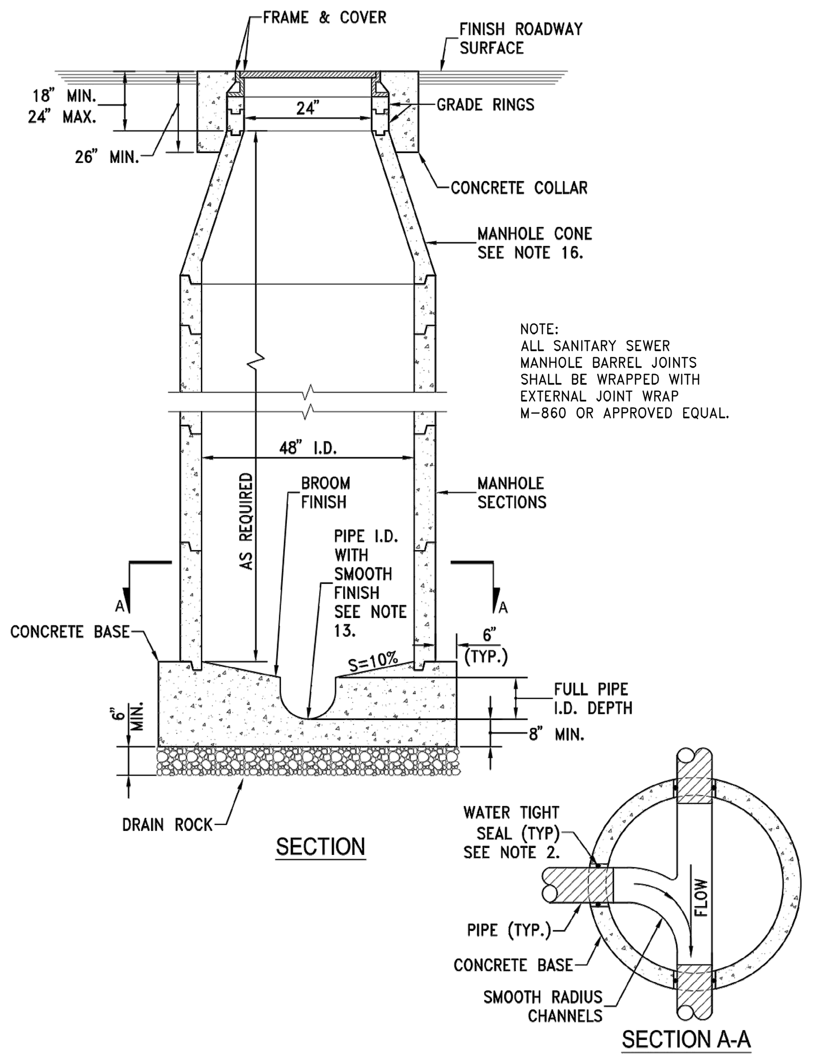

STANDARD DETAILS FOR PUBLIC WORKS CONSTRUCTION — DRAWING No.

City of Sparks — **MANHOLE TYPE I** — S-206A — APPROVED BY: JE — DATE: 1/2020

GENERAL MANHOLE NOTES

1. ALL PRECAST MANHOLE COMPONENTS SHALL CONFORM TO ASTM C-478.
2. PIPES SHALL NOT PROTRUDE MORE THAN 3" INSIDE MANHOLE SECTION AS MEASURED AT THE OUTSIDE EDGES OF THE PIPE, VERTICALLY ALIGNED WITH THE SPRINGLINE. PIPE CONNECTION TO MANHOLE SHALL BE WATERTIGHT PER STANDARD DETAILS S-211A, S-211B AND S-211C.
3. MANHOLE BASE SHALL BE PORTLAND CEMENT CONCRETE (P.C.C.) AND SHALL HAVE THE FOLLOWING CHARACTERISTICS: 3000 PSI MINIMUM COMPRESSIVE STRENGTH AT 28 DAYS, MINIMUM 6 SACKS OF CEMENT PER CUBIC YARD WITH SLUMP AT 1 TO 4 INCHES. ALL MATERIAL SHALL CONFORM TO STANDARD SPECIFICATIONS OF PUBLIC WORKS CONSTRUCTION (SSPWC), AS ADOPTED BY CITY COUNCIL. PRECAST CONCRETE BASE MAY BE USED IN LIEU OF CAST-IN-PLACE BASE.
4. TYPE I MANHOLE TO BE UTILIZED FOR PIPE DIAMETERS OF 12" OR SMALLER AND DEPTHS NOT EXCEEDING 18 FEET.
5. TYPE V MANHOLE TO BE UTILIZED FOR PIPE DIAMETERS OF 15" THROUGH 27" OR DEPTHS EXCEEDING 18 FEET.
6. MANHOLE MATERIALS AND CONSTRUCTION SHALL CONFORM TO THE REQUIREMENTS OF SECTION 204 "MANHOLES AND CATCH BASINS" OF THE STANDARD SPECIFICATIONS.
7. PRECAST MANHOLE SECTIONS, OTHER THAN GRADE RINGS, SHALL BE JOINED WITH FLEXIBLE GASKET MATERIAL SUCH AS "RAM-NEK" OR EQUAL AS PER MANUFACTURER'S RECOMMENDATIONS.
8. EXCAVATION AND BACKFILL SHALL BE AS SPECIFIED FOR "TRENCH EXCAVATION AND BACKFILL" IN SECTION 305 OF THE STANDARD SPECIFICATIONS.
9. EXCAVATION SHALL BE AS NEARLY VERTICAL AS POSSIBLE (SHEET AND SHORE IF SOIL CONDITIONS REQUIRE) IN EXISTING STREET SECTIONS, ALLEY SECTIONS, AND CONFINED AREAS, SUCH AS LIMITED EASEMENTS OR ADJACENT STRUCTURES.
10. MANHOLE PRECAST SECTION LENGTH SHALL BE ARRANGED TO FIT THE REQUIRED DEPTH.
11. NO LATERALS OR PIPES LESS THAN 8" IN DIAMETER SHALL BE CONNECTED TO THE MANHOLE.
12. PRECAST CONCRETE BASE MAY BE USED IN LIEU OF CAST-IN-PLACE BASE.
13. MATCH PIPE INVERTS TO MANHOLE INVERTS WHERE PIPES CONNECT TO MANHOLE BASE.
14. ALL MANHOLES SHALL BE WATERTIGHT.
15. SEE DETAIL FOR INSIDE DROP MANHOLE FOR SANITARY SEWERS WITH MORE THAN 2 FEET VERTICAL DROP AT THE MANHOLE. THE USE OF "OUTSIDE DROP" MANHOLES IS NOT PERMITTED.
16. THE USE OF FLAT TOP MANHOLE CONES REQUIRES PRIOR APPROVAL FROM THE CITY ENGINEER.
17. PRIOR TO BACKFILLING, ALL MANHOLES SHALL BE VACUUM TESTED PER ASTM C-1244.
18. NO STEPS, LADDERS, OR OTHER CLIMBING DEVICES SHALL BE INSTALLED IN THE MANHOLE.
19. REINFORCING STEEL SHALL BE AS SHOWN, WIRED TIGHTLY AT ALL INTERSECTIONS AND EMBEDDED AT LEAST 1½" CLEAR, UNLESS OTHERWISE NOTED.
20. WHEN PIPE CONNECTIONS TO EXISTING MANHOLES ARE ALLOWED, THEY SHALL BE MADE BY CORE DRILLING THE MANHOLE AND CONNECTING THE PIPE PENETRATION PER DETAIL S-211A & S-211B.
21. TYPE IV MANHOLES SHOULD ONLY BE USED AS APPROVED BY CITY ENGINEER

STANDARD DETAILS FOR PUBLIC WORKS CONSTRUCTION — DRAWING No.

City of Sparks — **NOTES - MANHOLE TYPE I, TYPE V & TYPE IV** — S-206D — APPROVED BY: JE — DATE: 1/2020

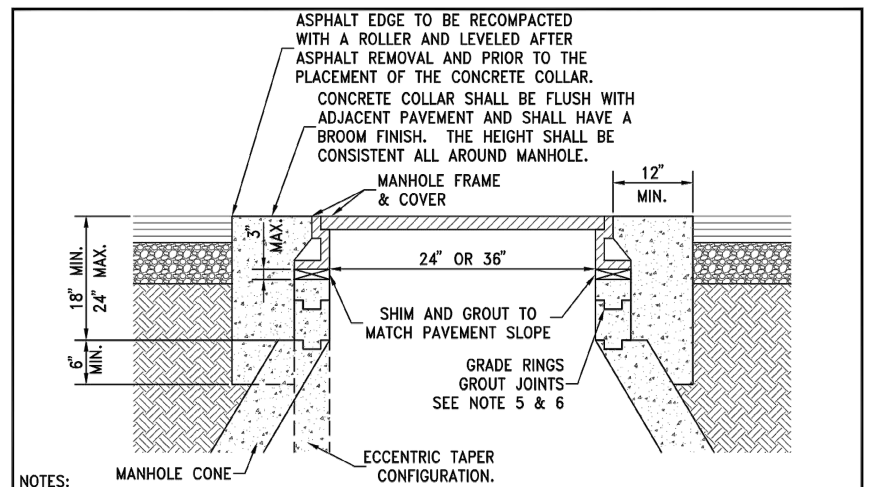

NOTES:

1. PORTLAND CEMENT CONCRETE (P.C.C.) SHALL HAVE THE FOLLOWING CHARACTERISTICS: 4000 PSI MIN. COMPRESSIVE STRENGTH AT 28 DAYS, MIN. 6 SACKS OF CEMENT PER CUBIC YARD WITH MAX. WATER-CEMENT RATIO OF 0.45, AIR ENTRAINMENT 6% ±1.5%, SLUMP AT 1 TO 4 INCHES. MIX DESIGN SHALL CONFORM TO THE REQUIREMENTS OF SECTION 337 OF STANDARD SPECIFICATIONS OF PUBLIC WORKS CONSTRUCTION (SSPWC), AS ADOPTED BY CITY COUNCIL. CEMENT SHALL BE TYPE II. ALL CEMENT CONCRETE SHALL HAVE A COARSE AGGREGATE GRADATION CONFORMING TO SIZE No. 67. POLYPROPYLENE OR CELLULOSE FIBERS SHALL BE ADDED TO THE P.C.C. AT 1.5 LBS. PER CUBIC YARD. ALL MATERIALS SHALL CONFORM TO SSPWC, AS ADOPTED BY CITY COUNCIL.
2. CIRCUMSTANCES MAY REQUIRE THE NEED FOR SPECIAL TYPES OF TOP OF MANHOLE CONFIGURATIONS SUCH AS FLAT TOP, ABOVE GROUND, ETC. AS DIRECTED BY THE CITY OF SPARKS. DETAILED PLANS OF ANY SPECIAL TOP OF MANHOLE CONFIGURATIONS AND ASSOCIATED COLLARS MUST BE APPROVED BY THE CITY ENGINEER.
3. IN UNPAVED AREAS, IT SHALL BE NECESSARY TO SET THE MANHOLE RIM APPROXIMATELY 6 INCHES ABOVE THE SURROUNDING AREA. INSTALL A 6 INCH THICK RING OF CONCRETE, TAPERED AT A 3:1 SLOPE, FROM THE TOP, OUTSIDE EDGE OF THE COLLAR TO THE EXISTING GROUND SURFACE.
4. EXISTING SANITARY SEWER MANHOLE LIDS LOCATED IN GUTTER PANS, SHALL HAVE NEW WATER TIGHT FRAMES AND COVERS.
5. ALL GRADE RING JOINTS ARE TO BE GROUTED WITH NON-SHRINK GROUT HAVING THE FOLLOWING CHARACTERISTICS: 3000 PSI MIN. COMPRESSIVE STRENGTH AT 28 DAYS, MIN. 6 SACKS OF CEMENT PER CUBIC YARD AND SLUMP AT 1 TO 4 INCHES. ALL MATERIAL SHALL CONFORM TO SSPWC, AS ADOPTED BY CITY COUNCIL.
6. ALL GRADE RINGS SHALL BE PORTLAND CEMENT CONCRETE. PVC GRADE RINGS ARE NOT ALLOWED. CONTRACTOR SHALL USE AS FEW GRADE RINGS AS POSSIBLE TO REACH REQUIRED DEPTH. HOWEVER IN NO CASE SHALL THE QUANTITY EXCEED 4 GRADE RINGS WITHOUT APPROVAL OF THE CITY ENGINEER.
7. P.C.C. COLLARS IN ALL ROADWAYS SHALL BE PROTECTED FROM TRAFFIC LOADS UNTIL MINIMUM 3000 PSI IS ATTAINED.

STANDARD DETAILS FOR PUBLIC WORKS CONSTRUCTION — DRAWING No.

City of Sparks — **MANHOLE COLLAR** — S-210A — APPROVED BY: JE — DATE: 1/2020

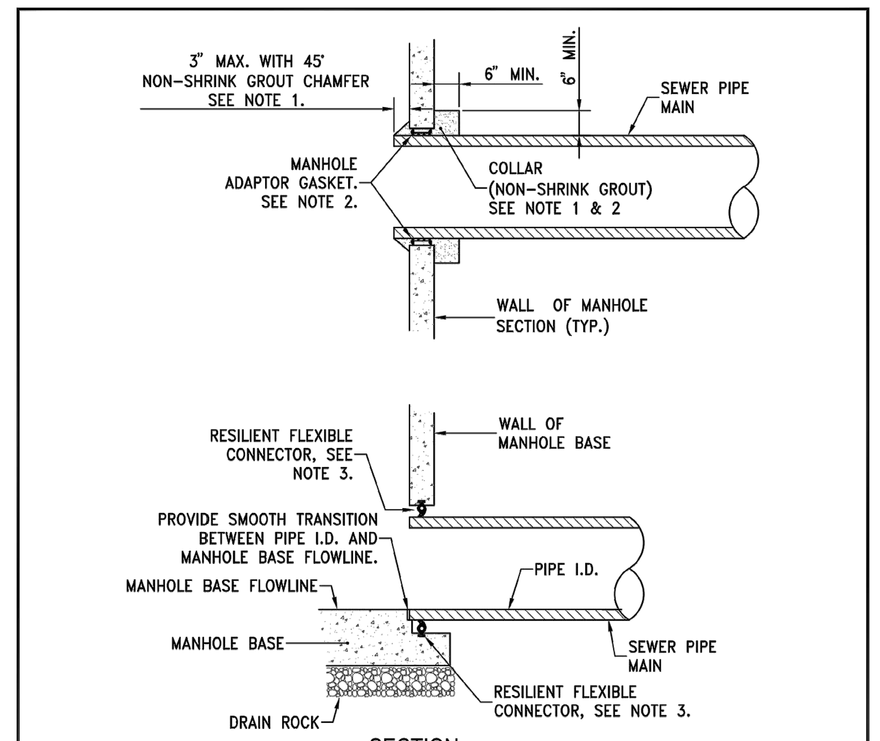

NOTES:

1. NON-SHRINK GROUT SHALL HAVE THE FOLLOWING CHARACTERISTICS: 3000 PSI MIN. COMPRESSIVE STRENGTH AT 28 DAYS, MIN. 6 SACKS OF CEMENT PER CUBIC YARD AND SLUMP AT 1 TO 4 INCHES. ALL MATERIAL SHALL CONFORM TO STANDARD SPECIFICATIONS OF PUBLIC WORKS CONSTRUCTION (SSPWC) SECTION 202, AS ADOPTED BY CITY COUNCIL.
2. SANITARY SEWER PIPE CONNECTION TO MANHOLE SECTIONS (DROP MANHOLES) REQUIRE AN AGENCY-APPROVED FORM OF SEAL OR WATER STOP TO PROVIDE A WATERTIGHT CONNECTION. UTILIZE A ROMAC STYLE "LCT" MANHOLE ADAPTOR GASKET OR APPROVED EQUAL IN CONJUNCTION WITH NON-SHRINK GROUT.
3. SANITARY SEWER PIPE CONNECTION TO MANHOLE BASE SHALL REQUIRE A RESILIENT FLEXIBLE CONNECTOR INSTALLED IN ACCORDANCE WITH STANDARD DETAIL S-211C.
4. ALL PIPE OPENINGS TO NEW MANHOLES MUST BE EITHER CAST-IN-PLACE OR PRE-FORMED AND PIPE OPENINGS TO EXISTING MANHOLES MUST BE CORE DRILLED.

STANDARD DETAILS FOR PUBLIC WORKS CONSTRUCTION — DRAWING No.

City of Sparks — **SANITARY SEWER PIPE TO MANHOLE CONNECTION** — S-211A — APPROVED BY: JE — DATE: 1/2020

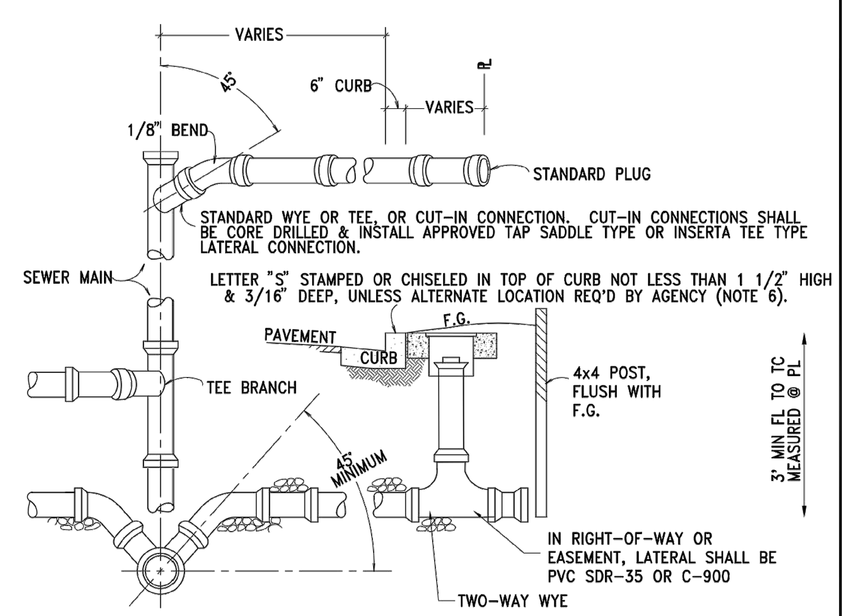

NOTES

1. SEWER LATERALS SHALL HAVE A MINIMUM SLOPE OF 2%, UNLESS OTHERWISE APPROVED BY THE CITY ENGINEER.
2. LATERAL SHALL BE CUT BACK TO SOUND MATERIAL FOR COUPLING.
3. ALL CONNECTIONS TO THE CITY SEWER MAINS MUST BE CORE DRILLED.
4. ENCASE LATERAL CONNECTION IN CEMENT, STABILIZED SAND OR 2000 PSI CONCRETE FOLLOWING INSTALLATION. CONNECTION MUST BE INSPECTED BY CITY PRIOR TO BACKFILL.
5. NO LATERAL CONNECTIONS SHALL BE MADE TO SANITARY SEWER "INTERCEPTOR" LINES WITHOUT THE APPROVAL OF THE CITY ENGINEER.
6. ALL APPLICABLE SANITARY SEWER PIPE INSTALLATION WORK SHALL BE IN ACCORDANCE WITH THE UNIFORM PLUMBING CODE.

STANDARD DETAILS FOR PUBLIC WORKS CONSTRUCTION — DRAWING No.

City of Sparks — **SANITARY SEWER LATERAL** — S-212A — APPROVED BY: JE — DATE: 1/2020

NOTES:

1. SEWER LATERALS SHALL HAVE A MINIMUM PIPE DIAMETER OF 4-INCHES.
2. ALL PLASTIC PIPE USED FOR SEWER SERVICE LATERAL CONSTRUCTION SHALL BE SOLID WALL AND SHALL MEET THE REQUIREMENTS OF D-2412, HAVE A MINIMUM STIFFNESS OF 46 PSI AS DEFINED BY THE REQUIREMENTS OF ASTM D-3034.
3. SERVICE LATERALS SHALL HAVE A MINIMUM SLOPE OF 1/4-INCH PER FOOT UNLESS OTHERWISE APPROVED BY THE CITY ENGINEER.
4. SEWER LATERALS SHALL HAVE A MINIMUM COVER OF 36-INCHES IN THE PUBLIC RIGHT-OF-WAY AND IN EASEMENTS UNLESS OTHERWISE APPROVED BY THE CITY ENGINEER. THE DEFINITION OF "COVER" IS THE DISTANCE FROM THE TOP OF PIPE TO FINISHED GRADE.
5. USE OF SEWER SERVICE TAP SADDLE CONNECTIONS SHALL NOT BE ALLOWED FOR NEW SEWER MAIN CONSTRUCTION. WHEN A TAP SADDLE CONNECTION IS TO BE USED ON AN EXISTING SEWER MAIN, IT SHALL BE A WYE SADDLE AND BE INSTALLED PER DETAIL S-212C.
6. SEWER LATERALS SHALL HAVE A CLEANOUT INSTALLED BETWEEN SIDEWALK AND RIGHT-OF-WAY. A G5 BOX CLEARLY MARKED "SEWER" SHALL BE INSTALLED OVER THE TOP OF THE CLEANOUT RISER CAP PIPE.
7. SEWER LATERALS SHALL NOT BE CONNECTED DIRECTLY TO OR WITHIN 5-FEET OF A MANHOLE STRUCTURE.
8. EXISTING SEWER LATERALS SHALL BE CUT BACK TO SOUND MATERIAL FOR COUPLING. PLACE 6-INCH THICK CONCRETE PAD UNDER CONNECTION.
9. SEWER LATERAL CONNECTION SHALL BE STABILIZED WITH APPROVED MATERIAL FOLLOWING INSTALLATION. CONNECTION TO CITY SEWER MAIN MUST BE INSPECTED BY THE CITY PRIOR TO BACKFILL.
10. NO LATERAL CONNECTIONS SHALL BE MADE DIRECTLY TO A SANITARY SEWER "INTERCEPTOR" UNLESS APPROVED BY THE CITY ENGINEER.
11. SEWER LATERALS SHALL NOT BE CONNECTED TO A SEWER MAIN UNLESS THE CONNECTION POINT IS BETWEEN TWO MANHOLE STRUCTURES.
12. EACH INDIVIDUAL PARCEL SHALL HAVE A MINIMUM OF ONE SEWER LATERAL. TWO OR MORE PARCELS SHALL NOT SHARE ONE SEWER LATERAL.
13. SANITARY SEWER LATERAL IDENTIFICATION AND LOCATING REQUIREMENTS SHALL BE PER SPARKS MUNICIPAL CODE 17.16.130 (SMC 17.16.130).
14. DISCONTINUANCE OF USE OF AN EXISTING SEWER LATERAL REQUIRES ABANDONMENT OF THE LATERAL. CUT, REMOVE 1-FOOT OF EXISTING LATERAL AND CAP BOTH ENDS OF THE EXISTING SEWER LATERAL TO BE ABANDONED WITHIN 6-INCHES OF THE SEWER MAIN. ABANDONMENT MUST BE INSPECTED BY CITY PRIOR TO BACKFILL.
15. PROPERTY OWNER SHALL BE RESPONSIBLE FOR OPERATION, MAINTENANCE AND REPAIR OF THE SEWER LATERAL WITHIN THE PUBLIC RIGHT-OF-WAY PER SPARKS MUNICIPAL CODE.

STANDARD DETAILS FOR PUBLIC WORKS CONSTRUCTION — DRAWING No.

City of Sparks — **NOTES - SANITARY SEWER LATERAL** — S-212B — APPROVED BY: JE — DATE: 1/2020

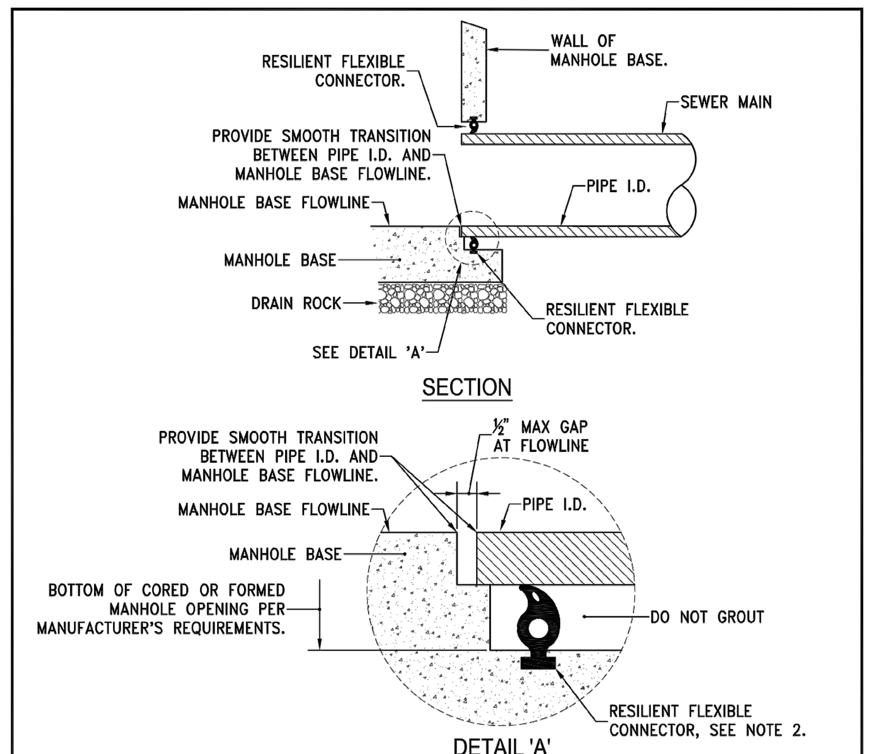

NOTES:

1. A SEAL OR WATER STOP IS REQUIRED ON ALL SANITARY SEWER INSTALLATIONS AND IN OTHER APPLICATIONS AS REQUIRED BY THE CITY TO PROVIDE A WATERTIGHT CONNECTION.
2. A RESILIENT FLEXIBLE CONNECTOR PER ASTM C 923-89 SHALL BE USED AT THE MANHOLE/PIPE CONNECTION TO SATISFY THE REQUIREMENTS OF NOTE 1. FOR PRE-CAST CONCRETE STRUCTURES, THE RESILIENT FLEXIBLE CONNECTOR SHALL BE AN "A-LOK" TYPE PIPE-TO-MANHOLE CONNECTOR OR APPROVED EQUAL. FOR CAST-IN-PLACE STRUCTURES, THE RESILIENT FLEXIBLE CONNECTOR SHALL BE A "KOR-N-SEAL I - TOGGLE KORBAND" TYPE PIPE-TO-MANHOLE CONNECTOR OR APPROVED EQUAL.
3. THE INTERIOR MANHOLE CONNECTION SHALL HAVE A SMOOTH TRANSITION BETWEEN PIPE I.D. AND MANHOLE BASE FLOWLINE. NO GROUT OR CONCRETE SHALL BE PLACED AROUND THE RESILIENT FLEXIBLE CONNECTOR.

STANDARD DETAILS FOR PUBLIC WORKS CONSTRUCTION — DRAWING No.

City of Sparks — **RESILIENT FLEXIBLE CONNECTOR** — S-211C — APPROVED BY: JE — DATE: 1/2020

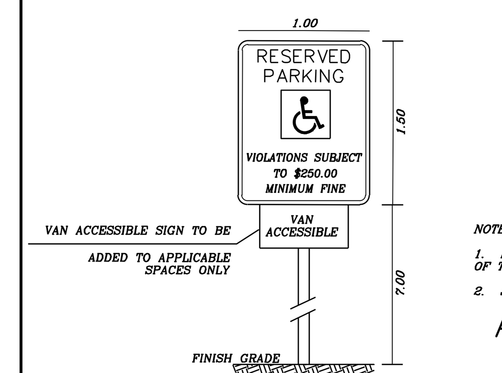

NOTES:

1. MOUNT SIGN ON 2" O.D. BY 6' LONG SCH. 40 GALVANIZED PIPE WITH CAP, SET IN 22" BY 24" DEEP FOOTING.
2. SIGN INSTALLATION AND MATERIALS SHALL CONFORM TO THE LATEST EDITION OF M.U.T.C.D. AND SECTION 332 OF THE STANDARD SPECIFICATIONS.
3. SYMBOL SHALL BE REFLECTIVE WHITE ON BLUE BACKGROUND.

ACCESSIBLE PARKING SIGN

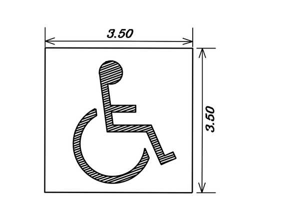

NOTES:

1. PAVEMENT MARKING SHALL CONFORM TO SECTION 324 OF THE STANDARD SPECIFICATIONS.
2. SYMBOL TO BE BLUE PAINT ON WHITE BACKGROUND.

ACCESSIBLE PARKING PAVEMENT MARKING

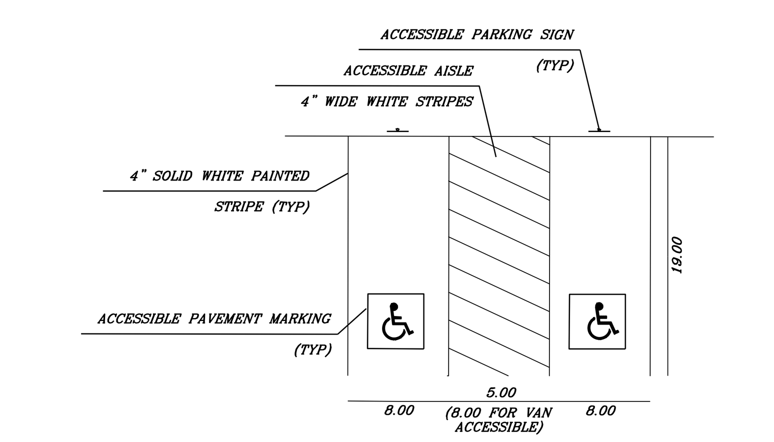

ACCESSIBLE PARKING STALL

FIRE HYDRANT COLOR SCHEDULE

RENO
ALL HYDRANTS TO BE FACTORY ENAMELED SAFETY RED.

SPARKS
PUBLIC HYDRANTS TO BE FACTORY ENAMELED SAFETY YELLOW.
PRIVATE HYDRANTS TO BE FACTORY ENAMELED SAFETY RED.

WASHOE COUNTY
PUBLIC HYDRANTS TO BE FACTORY ENAMELED SAFETY RED.
PRIVATE HYDRANTS TO BE FACTORY ENAMELED SAFETY RED WITH HIGH REFLECTIVE WHITE TOP.

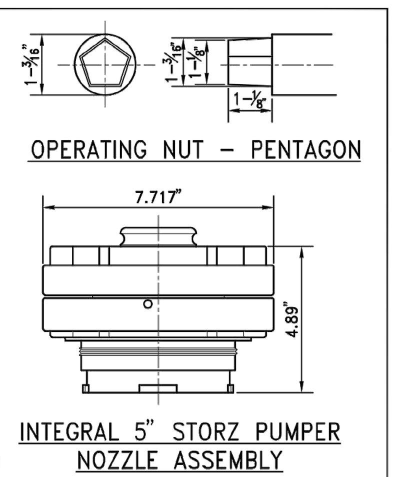

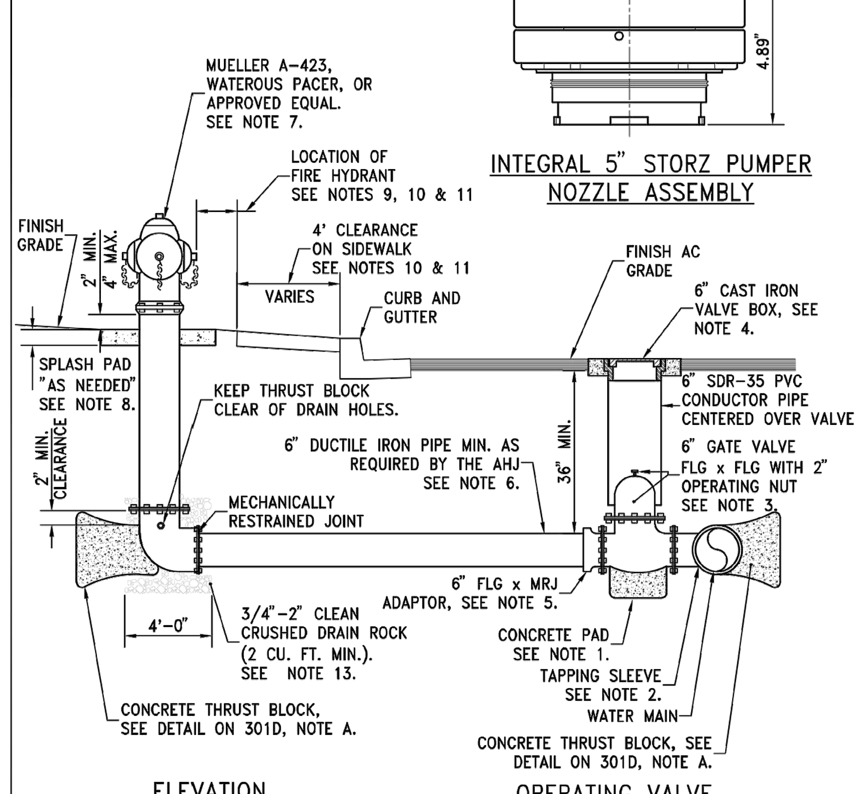

STANDARD DETAILS FOR PUBLIC WORKS CONSTRUCTION — DRAWING No.

City of Sparks — **FIRE HYDRANT** — S-301A — APPROVED BY: JE — DATE: 1/2020

NOTES:

1. PORTLAND CEMENT CONCRETE (P.C.C.) SHALL HAVE THE FOLLOWING CHARACTERISTICS: 4000 PSI MIN. COMPRESSIVE STRENGTH AT 28 DAYS, MIN. 6 SACKS OF CEMENT PER CUBIC YARD WITH MAX. WATER-CEMENT RATIO OF 0.45, AIR ENTRAINMENT 6% ±1.5%, SLUMP AT 1 TO 4 INCHES. MIX DESIGN SHALL CONFORM TO THE REQUIREMENTS OF SECTION 337 OF STANDARD SPECIFICATIONS FOR PUBLIC WORKS CONSTRUCTION (SSPWC), AS ADOPTED BY AUTHORITY HAVING JURISDICTION (AHJ). CEMENT SHALL BE TYPE II. ALL CEMENT CONCRETE SHALL HAVE A COARSE AGGREGATE GRADATION CONFORMING TO SIZE No. 67. POLYPROPYLENE OR CELLULOSE FIBERS SHALL BE ADDED TO THE P.C.C. AT 1.5 LBS. PER CUBIC YARD. ALL MATERIALS SHALL CONFORM TO SSPWC, AS ADOPTED BY AHJ.
2. TAPPING SLEEVE
HOT-TAP TAPPING SLEEVES SHALL BE FULL-CIRCLE ASTM A 240, TYPE 304 STAINLESS STEEL WITH FULL CIRCUMFERENCE GASKETS THROUGHOUT SLEEVE LENGTH WITH AWWA C207 CLASS D ANSI 150 LB. DRILLING ASTM A 240, TYPE 304 STAINLESS STEEL FLANGE. TYPE 304 STAINLESS STEEL STUD BOLTS, HEAVY HEX NUTS, AND WASHERS SHALL BE INCLUDED. HEAVY HEX NUTS AND STUD BOLTS SHALL BE COATED TO PREVENT GALLING. TYPE 304 STAINLESS STEEL TEST PLUG SHALL BE INCLUDED WITH THREADS COATED TO PREVENT GALLING. TAPPING SLEEVE SHALL BE RATED FOR A TEST PRESSURE OF 300 PSI AND WORKING PRESSURE OF 200 PSI. TAPPING SLEEVE SHALL BE ROMAC STYLE "SST" STAINLESS STEEL TAPPING SLEEVE AS MANUFACTURED BY ROMAC INDUSTRIES, INC.; SMITH-BLAIR 663 STAINLESS STEEL FLANGE TAPPING SLEEVE AS MANUFACTURED BY SMITH-BLAIR, INC.; OR EQUAL.
ALL WATER MAIN SHUT DOWNS AND/OR INSTALLATION OF TAPPING SLEEVES SHALL BE COORDINATED WITH THE WATER PURVEYOR IN THE AREA AND CONFORM TO THEIR REQUIREMENTS. TAPPING SLEEVES ARE TO BE USED ONLY FOR EXISTING INSTALLATIONS.
3. GATE VALVE
GATE VALVE SHALL BE 6-INCH, FLG X FLG AND SHALL MEET AWWA C515, DUCTILE IRON BODY, NON-RISING STEM, RESILIENT-SEATED VALVE. GATE VALVE SHALL BE EQUIPPED WITH A 2-INCH OPERATING NUT FOR BURIED SERVICE. GATE VALVE SHALL BE FUSION EPOXY LINED AND COATED. ALL VALVES FOR BURIED SERVICE SHALL BE POLYETHYLENE ENCASED PER AWWA C105. GATE VALVE SHALL BE A MUELLER A-2361 RESILIENT WEDGE GATE VALVE; AMERICAN AVK COMPANY SERIES 65 AWWA C515 DUCTILE IRON GATE VALVE; OR APPROVED EQUAL.
4. 6" VALVE BOX SHALL BE D&L #8044 & #8056 OR APPROVED EQUAL. CASTINGS SHALL BE CAST IRON GRAY AND MEET THE REQUIREMENTS OF ASTM A48-74, CLASS 30B, NO PAINT.
5. 6-INCH FLG X MRJ ADAPTOR
6-INCH FLG X MRJ ADAPTOR SHALL BE DUCTILE IRON AND MEET THE REQUIREMENTS OF AWWA STANDARDS C110/C153 AND C104. ALL FITTINGS SHALL BE POLYETHYLENE ENCASED PER AWWA C105. ADAPTOR SHALL BE ASPHALTIC COATED WITH CEMENT-MORTAR LINING PER AWWA C110/C153 AND C104.
6. 6-INCH MINIMUM DUCTILE IRON LATERAL PIPE
ALL DUCTILE IRON PIPE SHALL MEET THE REQUIREMENTS OF AWWA STANDARDS C151, C104, AND C111 WITH PRESSURE CLASS 350, STANDARD CEMENT LINING, BITUMINOUS COATING, AND SHALL BE NSF-61 CERTIFIED. ALL DUCTILE IRON PIPE SHALL BE POLYETHYLENE ENCASED WITH THICKNESS OF 4 MIL AND BE BLACK IN COLOR. MATERIAL SHALL BE HIGH-DENSITY, CROSS-LAMINATED FILM CONFORMING TO SECTION 4.1.3 OF AWWA STANDARD C105. TUBE SIZE SHALL BE AS LISTED IN TABLE 1 OF SAME STANDARD. DUCTILE IRON PIPE SHALL BE EQUIPPED WITH TYTON TYPE BELL AND SPIGOT JOINTS. DUCTILE IRON PIPE SHALL BE TYTON DUCTILE IRON PIPE AS MANUFACTURED BY U.S. PIPE, GRIFFIN TYTON JOINT DUCTILE IRON PIPE AS MANUFACTURED BY GRIFFIN PIPE PRODUCTS CO., INC., OR APPROVED EQUAL. EXCEPTIONS FOR PRIVATE INSTALLATION UPON APPROVAL FROM AHJ.

STANDARD DETAILS FOR PUBLIC WORKS CONSTRUCTION — DRAWING No.

City of Sparks — **NOTES - FIRE HYDRANT** — S-301B — APPROVED BY: JE — DATE: 1/2020

NOTES CONT:

7. MUELLER A-423 OR AMERICAN WATEROUS PACER WB67-250 WITH 5-1/4" VALVE OPENING OR FIRE DEPARTMENT APPROVED EQUAL. RISER SHALL BE 4 FT OR 5 FT AND RISER TYPE SHALL BE SAME AS THE FIRE HYDRANT MANUFACTURER. HYDRANTS MUST BE FACTORY PAINTED TO BE ACCEPTED. ALL HYDRANTS SHALL HAVE TWO 2-½" HOSE NOZZLES AND ONE FACTORY INSTALLED INTEGRAL 5" STORZ PUMPER NOZZLE ASSEMBLY.
8. IF PROPOSED HYDRANT LOCATION IS WITHIN PARKWAY OR LANDSCAPE WHERE NO CONCRETE EXISTS, PLACE 36" DIAMETER ROUND OR 36" x 36" SQUARE, 4" THICK REINFORCED CONCRETE SPLASH PAD AS REQUIRED BY THE AHJ. NO FENCES, LANDSCAPE FEATURES, OR OTHER OBSTRUCTIONS SHALL BE ALLOWED WITHIN 3-FEET OF ANY PORTION OF A FIRE HYDRANT. CLEARANCE IS MEASURED FROM ALL OBSTRUCTIONS TO THE NEAREST POINT ON THE FIRE HYDRANT. ANTICIPATED PLANT GROWTH TO BE CONSIDERED IN DESIGN AND INSTALLATION.
9. FIRE HYDRANTS SHALL BE INSPECTED BY AHJ INSPECTOR. INSPECTIONS SHALL BE SCHEDULED A MINIMUM OF TWO BUSINESS DAYS PRIOR AND INSPECTIONS SHALL BE PERFORMED DURING REGULAR BUSINESS HOURS. CONTACT AHJ FIRE PREVENTION BUREAU TO SCHEDULE INSPECTIONS.
10. FIRE HYDRANTS SHALL BE PLACED WITHIN THE RIGHT-OF-WAY OR EASEMENT GRANTED OUTSIDE THE RIGHT-OF-WAY. FIRE HYDRANT PLACED WITHIN PEDESTRIAN WALKWAY AND/OR SIDEWALKS SHALL PROVIDE FOR A MINIMUM OF 4 FT CLEARANCE IN ACCORDANCE WITH PUBLIC RIGHT-OF-WAY ACCESSIBILITY GUIDELINES (PROWAG).
11. AHJ APPROVAL IS REQUIRED FOR HYDRANT LOCATION WHERE NO SIDEWALK EXISTS BEHIND CURB OR WHERE A LANDSCAPE STRIP IS BETWEEN THE CURB AND THE SIDEWALK.
12. FIRE HYDRANTS SHALL BE TESTED BY THE AHJ PRIOR TO COMBUSTIBLES BEING BROUGHT ON SITE.
13. FOR TRENCH EXCAVATION/BACKFILL SPECIFICATIONS SEE DETAIL BELOW. ALL DRAIN ROCK SHALL BE PLACED PRIOR TO INSPECTION AND BACKFILL.

TRENCH EXCAVATION/BACKFILL	
AHJ	DETAIL #
RENO	R-122
SPARKS	S-117
WASHOE COUNTY	W-22

STANDARD DETAILS FOR PUBLIC WORKS CONSTRUCTION — DRAWING No.

City of Sparks — **NOTES - FIRE HYDRANT** — S-301C — APPROVED BY: JE — DATE: 1/2020

THRUST BLOCK DETAILS & NOTES

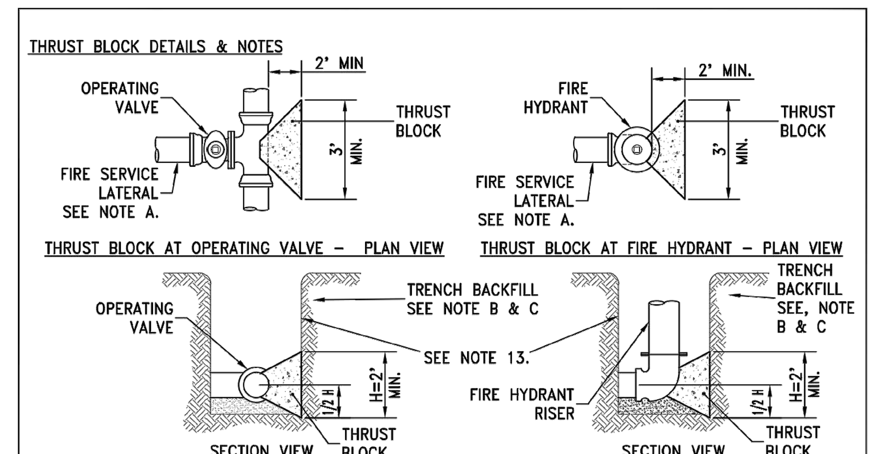

THRUST BLOCK NOTES

A. THRUST BLOCK SIZE ASSUMES MAXIMUM 6" DIAMETER FIRE HYDRANT SERVICE. THRUST BLOCKS FOR LARGER SERVICES REQUIRE APPROVAL OF AHJ.

B. THE THRUST BLOCK DESIGN SHALL BE BASED ON THE FORCE RESISTING CAPACITY OF THE NATIVE SOILS AS STATED IN THE SOILS EVALUATION REPORT SPECIFIC TO THE PROJECT SITE. THE CALCULATIONS SHOWN WITH THE TRUST BLOCK DESIGN AND SIZING TABLE SHALL BE BASED ON THE REQUIREMENTS OF THE MOST CURRENT NFPA 24, ARTICLE 10.8.2 REQUIREMENTS. THE SOIL EVALUATION REPORT OR A SINGLE PAGE, STAMPED SUMMARY SHALL BE SUBMITTED WITH THE PROJECT PLANS.

C. THRUST BLOCKS SHALL BE POURED AGAINST UNDISTURBED SOIL. IN CASES WHERE THIS IS NOT PRACTICAL, BACKFILL AREA BEHIND WHERE THRUST BLOCK WILL BE PLACED WITH AGGREGATE BASE COMPACTED TO 95% RELATIVE COMPACTION, CUT-BACK COMPACTED AGGREGATE BASE TO EXPOSE A FIRM SURFACE, THEN PLACE THRUST BLOCK.

STANDARD DETAILS FOR PUBLIC WORKS CONSTRUCTION — DRAWING No.

City of Sparks — **NOTES - FIRE HYDRANT** — S-301D — APPROVED BY: JE — DATE: 1/2020

CITY OF SPARKS APPROVAL
1/5/2024
JON R. ERICSON, P.E., PTOE
City Engineer

tsk
225 South Arlington Avenue,
Suite A
Reno NV, 89501
phone: 775.857.2949
fax: 775.857.2403
www.tska.com

THESE DRAWINGS AND SPECIFICATIONS ARE THE PROPERTY OF TATE SNYDER KIMSEY ARCHITECTS AND MAY NOT BE REPRODUCED OR USED FOR ANY PURPOSE WITHOUT THE ARCHITECTS WRITTEN CONSENT.
AS INSTRUMENTS OF SERVICE, THESE DOCUMENTS ARE NOT FINAL AND READY FOR USE, AND THEREFORE NOT VALID, UNLESS THEY ARE SEALED, SIGNED AND DATED.
Copyright, Ltd 2023

Consultant

WOOD RODGERS
BUILDING RELATIONSHIPS ONE PROJECT AT A TIME
1361 Corporate Boulevard Reno, NV 89502
Tel 775.823.4068
Fax 775.823.4066

PLEASE RECYCLE

Project

SPARKS Fire Station #6

6963 SCHEIDBAR ROAD
SPARKS, NEVADA 89436

Job No: 22-043

Owner

CITY OF SPARKS

PROFESSIONAL ENGINEER — STATE OF NEVADA — MATTHEW J. ROULIAS — Exp: 12-31-25 — CIVIL — No. 18708

01/04/2024

BID SET

REVISIONS		
REV	DATE	DESCRIPTION
1	05/31/23	CITY COMMENT REVISIONS
2	08/21/23	TMWA & NVEnergy REVISIONS
3	09/20/23	TMWA & NVEnergy REVISIONS
4	10/17/23	ADDED NEW PARCELS FROM PM 5686
5	01/03/24	BID SET REVIEW & COORDINATION

Sheet Title

DETAIL SHEET

Date: APRIL 12, 2023

Sheet No:

D-2

1000 GALLON SAND-OIL INTERCEPTOR

MODEL JP1000EE-SO

ACCEPTED BY UPC®

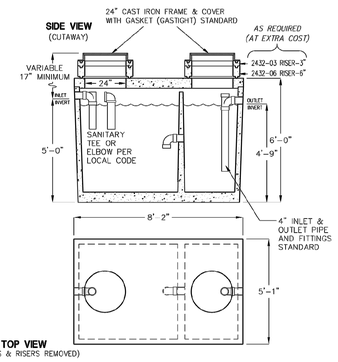

LIQUID CAPACITY: 1,000 GALLONS.

BOX DESIGN LOAD: H-20 TRAFFIC FROM 1' TO 6' OF SOIL COVER.

FOR COMPLETE DESIGN AND PRODUCT INFORMATION CONTACT JENSEN PRECAST.

9/23/02
1000SO_JP.dwg
© 2002 Jensen Precast

JENSEN PRECAST®

MODEL 3660-U

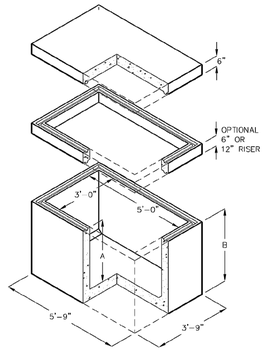

MODEL	A	B	INSIDE VOLUME		APPROX. WT.
3636U-6	3'-6"	4'-0"	53 CU. FT.	393 GAL.	5063 LBS.
3636U-12	4'-0"	4'-6"	60 CU. FT.	450 GAL.	5555 LBS.

FOR COMPLETE DESIGN AND PRODUCT INFORMATION, CONTACT JENSEN PRECAST.

SEE ACCESSORIES SECTION FOR ACCESS OPENINGS AND HARDWARE APPLICATIONS.

1/17/03
3636U_U.dwg
© 2003 Jensen Precast

JENSEN PRECAST®

at&t Northern California Nevada

3'-0"x5'-0" PAINTED ACCESS COVER

TRAFFIC RATED HINGED ADJUSTABLE FRAME

AT&T OIN: 100061920

NOTE: COVERS NOT INTENDED FOR USE IN AREAS OF HIGH DENSITY TRAFFIC.

5

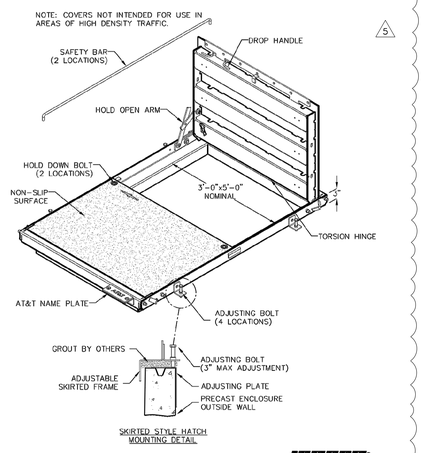

WEIGHT: 445 LBS

F 8/14/2015 CA3BATWS.DWG ©2015

JENSEN PRECAST EST. 1968

Jensen Precast reserves the right to make changes to product design and/or dimensions without notice. Please contact Jensen Precast whenever necessary for confirmation or advice on product design.

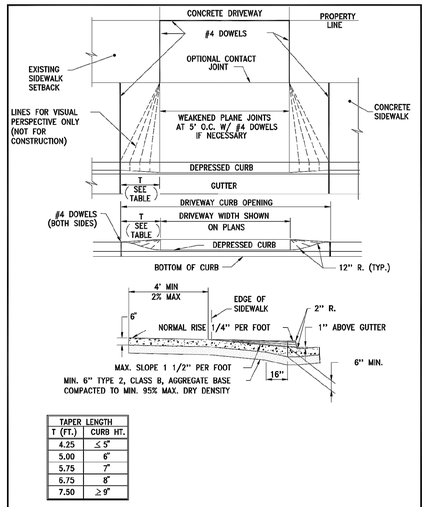

TAPER LENGTH	
T (FT.)	CURB HT.
4.25	≤ 5"
5.00	6"
5.75	7"
6.75	8"
7.50	≥ 9"

STANDARD DETAILS FOR PUBLIC WORKS CONSTRUCTION		DRAWING No.
City of Sparks	P.C.C. DRIVEWAY APRON-EXISTING	S-111A
		APPROVED BY: JE / DATE: 1/2020

RECLAIMED WATER TREATED EFFLUENT GENERAL NOTES:

1. ALL COVERS FOR METER BOXES, VALVE BOXES, FLUSH VALVES, PRESSURE REDUCING VAULTS, AIR/VAC RELEASE ASSEMBLIES, AND ALL OTHER APPURTENANCES REQUIRING VAULTS OR BOXES SHALL BE PURPLE IN COLOR (PANTONE COLOR #512), LABELED "RECLAIMED WATER" OR "EFFLUENT", AND HAVE SECURED OR LOCKING LIDS. PURPLE COLORATION SHALL BE OBTAINED FROM THE MANIFACTURER OR BE APPLIED BY POWDER COATING OR EPOXY PAINT. ALL APPURTENANCES SHALL HAVE A PURPLE TAG ATTACHED WITH THE WORDING "WARNING RECYCLED/RECLAIMED WATER DO NOT DRINK" AND "AVISO AGUA IMPURA NO TOMAR" (T. CHRISTY ENTERPRISES, MAXI VALVE IDENTIFICATION TAG, ID-MAX-P2-RC006 OR CITY OF SPARKS APPROVED EQUAL). A DEBRIS CAP WITH PURPLE COLORATION SHALL BE INSTALLED INSIDE OF ALL ROUND BOXES.
2. ALL ABOVE GROUND PIPING SHALL BE EPOXY PAINTED PURPLE (PANTONE COLOR #512) AND HAVE A PURPLE TAG ATTACHED WITH THE WORDING "WARNING RECYCLED/RECLAIMED WATER DO NOT DRINK" AND "AVISO AGUA IMPURA NO TOMAR" (T. CHRISTY ENTERPRISES, MAXI VALVE IDENTIFICATION TAG, ID-MAX-P2-RC006 OR CITY OF SPARKS APPROVED EQUAL).
3. ALL QUICK COUPLER VALVES SHALL HAVE PURPLE, LOCKABLE COVERS (RAIN BIRD 44NP OR CITY OF SPARKS APPROVED EQUAL).
4. ALL IRRIGATION CONTROLLER ENCLOSURES SHALL BE LABELED INSIDE AND OUTSIDE WARNING THAT THE SYSTEM USES RECLAIMED WATER (T. CHRISTY ENTERPRISES, CONTROLLER MARKING DECAL, PART NUMBER #ID-4100, OR CITY OF SPARKS APPROVED EQUAL).
5. DIRECT CONNECTIONS BETWEEN POTABLE WATER PIPING AND RECLAIMED WATER PIPING SHALL NOT EXIST UNDER ANY CONDITION, WITH OR WITHOUT BACKFLOW PROTECTION. REFERENCE SECTION 603.3.5 OF THE UNIFORM PLUMBING CODE, LATEST EDITION.
6. EACH EFFLUENT SERVICE CONNECTION SHALL INCLUDE A METER PROVIDED BY THE CITY OF SPARKS, UNLESS OTHERWISE STATED IN THE EFFLUENT AGREEMENT WITH THE CITY OF SPARKS.
7. TRACER WIRE SHALL BE PROVIDED FOR ALL DISTRIBUTION RECLAIMED WATER LINES AND SERVICE LATERALS AND SHALL BE PLACED ON TOP OF PIPE AND ATTACHED WITH DUCT TAPE AT 6 FEET MAXIMUM INTERVALS. AT 500 FEET INTERVALS, TRACER WIRE SHALL BE EXTENDED INTO SEPARATE TEST STATIONS CONSISTING OF RISERS AND VALVE BOXES. TEST LEAD WIRE SHALL BE LONG ENOUGH TO EXTEND FOUR (4) FEET ABOVE GROUND LEVEL AND SHALL TERMINATE IN TEST STATION BOX. TRACER WIRE SHALL BE ATTACHED TO SERVICE LATERALS WITH DUCT TAPE AT 3 FEET MAXIMUM INTERVALS, AND SHALL BE LONG ENOUGH TO EXTEND FOUR (4) FEET ABOVE GROUND AND SHALL TERMINATE IN METER BOX. TRACER WIRE SHALL BE PROVIDED FOR ALL IRRIGATION RECLAIMED WATER PIPING 3-INCH DIAMETER AND LARGER, BOTH WITHIN PUBLIC RIGHT-OF-WAY AND PRIVATE PROPERTY, AND SHALL BE PLACED ON TOP OF PIPE AND ATTACHED WITH DUCT TAPE AT 6 FEET MAXIMUM INTERVALS. TRACER WIRE SHALL BE LONG ENOUGH TO EXTEND FOUR (4) FEET ABOVE GROUND AND SHALL TERMINATE IN APPROPRIATE IRRIGATION CONTROL/VALVE BOX AT MAXIMUM 500 FEET INTERVALS. WIRE SHALL BE #12 AWG, INSULATED, STRANDED COPPER, THHN 600V. PRIOR TO ACCEPTANCE OF THE RECLAIMED WATERLINE(S) BY THE CITY OF SPARKS, THE CONTRACTOR SHALL PERFORM A CONTINUITY TEST AFTER BACKFILLING THE TRENCH TO THE SATISFACTION OF THE CITY OF SPARKS INSPECTOR AND/OR ENGINEER.
8. ALL BURIED IRRIGATION PIPING UPSTREAM OF AN ELECTRICAL CONTROL VALVE SHALL BE PURPLE PLASTIC PIPE OR BE ENCASED IN PURPLE POLYETHYLENE OR BAGS LABELED "CAUTION: BURIED RECLAIMED WATER LINE BELOW" AT INTERVALS NO GREATER THAN 5 FEET. FOR POLYETHYLENE (PE) SERVICE PIPE, PURPLE STRIPES ARE ACCEPTABLE.

STANDARD DETAILS FOR PUBLIC WORKS CONSTRUCTION		DRAWING No.
City of Sparks	EFFLUENT GENERAL NOTES	S-501A
		APPROVED BY: JE / DATE: 1/2020

RECLAIMED WATER TREATED EFFLUENT GENERAL NOTES:

9. ALL PIPING DOWNSTREAM OF AN ELECTRIC CONTROL VALVE SHALL BE PURPLE PLASTIC OR HAVE PURPLE RECLAIMED WARNING TAPE PLACED ON TOP OF THE PIPE. THIS DOES NOT APPLY TO FLEXIBLE POLYETHYLENE TUBING USED IN DRIP ZONES.
10. BURIED WARNING AND IDENTIFICATION TAPE SHALL BE POLYETHYLENE PLASTIC, METALLIC CORE DETECTABLE WARNING TAPE. AWWA, APWA, ACID AND ALKALI RESISTANT, PERMANENT MARKING, UNAFFECTED BY MOISTURE OR SOIL, MINIMUM FIVE (5) MILS THICK BY 3-INCHES WIDE. WARNING TAPE SHALL BE MANUFACTURED SPECIFICALLY FOR LOCATING, WARNING, AND IDENTIFICATION OF BURIED UTILITY LINES. APWA COLOR CODED PURPLE FOR RECLAIMED WATER WITH WARNING AND IDENTIFICATION IMPRINTED IN BOLD BLACK LETTERS CONTINUOUSLY OVER THE ENTIRE TAPE LENGTH. WARNING AND IDENTIFICATION TO READ "CAUTION: BURIED RECLAIMED WATER LINE BELOW" OR SIMILAR.
11. SIGNAGE SHALL BE POSTED AT ALL POINTS OF PUBLIC ACCESS (GATES, DRIVEWAYS, ETC.) AND AT MINIMUM 500 FEET INTERVALS ALONG PROJECT FENCELINE OR BORDER. IF RECLAIMED WATER IS STORED IN PONDS, PROVIDE SIGNAGE AT PONDS. SIGNS SHALL BE BILINGUAL IN ENGLISH AND SPANISH. MINIMUM SIGN SIZE SHALL BE 9" X 12". REFERENCE CITY OF SPARKS RECLAIMED WATER TREATED EFFLUENT DETAIL S-502.
12. RECLAIMED WATER LINES SHALL BE TREATED AS SEWER LINES AND ALL APPLICABLE SEPARATION FROM POTABLE WATER LINES SHALL BE MAINTAINED, UNLESS OTHERWISE AUTHORIZED.
13. HOSE BIBS SHALL NOT BE INSTALLED ON RECLAIMED WATER SYSTEMS.
14. CITY OF SPARKS INSPECTOR SHALL BE NOTIFIED BEFORE ANY SECTION OF PIPELINE IS BURIED TO ALLOW FOR INSPECTION AND POSITIONAL GPS OF THE FACILITIES.
15. NEW DEVELOPMENT MUST CONFORM TO THE CITY OF SPARKS RECLAIMED WATER TREATED EFFLUENT DESIGN AND PERFORMANCE STANDARDS FOR DESIGN AND CONSTRUCTION.

STANDARD DETAILS FOR PUBLIC WORKS CONSTRUCTION		DRAWING No.
City of Sparks	EFFLUENT GENERAL NOTES	S-501B
		APPROVED BY: JE / DATE: 1/2020

NOTES:

1. INSTALL SIGNS AT ALL POINTS OF PUBLIC ACCESS (GATES, DRIVEWAYS, ETC.) AND AT 300 FEET INTERVALS (MINIMUM) ALONG PROJECT FENCELINE OR BORDER. IF EFFLUENT IS STORED IN PONDS, PROVIDE SIGNAGE AT PONDS.
2. SIGNS SHALL BE BILINGUAL, IN ENGLISH AND SPANISH.
3. PROVIDE METAL SIGN WITH WHITE LETTERS ON PURPLE BACKGROUND.
4. MOUNT SIGN ON FENCE OR METAL POST.
5. REFERENCE NDEP WTS-1A FOR ALTERNATE SIGNS THAT ARE ACCEPTABLE.

STANDARD DETAILS FOR PUBLIC WORKS CONSTRUCTION		DRAWING No.
City of Sparks	EFFLUENT WARNING SIGN	S-502
		APPROVED BY: JE / DATE: 1/2020

NOTES:

1. PORTLAND CEMENT CONCRETE (P.C.C.) SHALL HAVE THE FOLLOWING CHARACTERISTICS: 4000 PSI MIN. COMPRESSIVE STRENGTH AT 28 DAYS, MIN. 6 SACKS OF CEMENT PER CUBIC YARD WITH MAX. WATER-CEMENT RATIO OF 0.45, AIR ENTRAINMENT 6% ±1.5%, SLUMP AT 1 TO 4 INCHES. MIX DESIGN SHALL CONFORM TO THE REQUIREMENTS OF SECTION 337 OF STANDARD SPECIFICATIONS OF PUBLIC WORKS CONSTRUCTION (SSPWC), AS ADOPTED BY CITY COUNCIL. CEMENT SHALL BE TYPE II. ALL CEMENT CONCRETE SHALL HAVE A COARSE AGGREGATE GRADATION CONFORMING TO SIZE No. 67. POLYPROPYLENE OR CELLULOSE FIBERS SHALL BE ADDED TO THE P.C.C. AT 1.5 LBS. PER CUBIC YARD. ALL MATERIALS SHALL CONFORM TO SSPWC, AS ADOPTED BY CITY COUNCIL.
2. AGGREGATE BASE MATERIAL UNDER DRIVEWAYS AND SIDEWALKS SHALL BE TYPE 2, CLASS B CRUSHED AGGREGATE BASE. ALL MATERIALS SHALL CONFORM TO SSPWC SECTION 200, AS ADOPTED BY CITY COUNCIL.
3. RESIDENTIAL DRIVEWAYS SHALL BE POURED SEPARATE FROM CURB AND GUTTER.
4. COMMERCIAL DRIVEWAYS MAY BE POURED MONOLITHIC WITH CURB AND GUTTER. COMMERCIAL DRIVEWAYS TO HAVE #4 BARS AT 18" ON CENTER LONGITUDINAL & TRANSVERSE EXTENDING INTO GUTTER PAN AND DRIVEWAY WINGS. MINIMUM 2" CONCRETE COVER FOR ALL REINFORCING BARS. WHEN COMMERCIAL DRIVEWAY APPROACH AND CURB & GUTTER IS POURED SEPARATELY, IT SHALL BE REQUIRED FOR EACH REINFORCING BAR TO BE DOWELED INTO ADJACENT CURB & GUTTER. DOWELS SHALL #4 REBAR, PENETRATE INTO CURB & GUTTER MINIMUM OF 6", SPACED AT 18" ON CENTER AND BE SECURELY TIED TO THE DRIVEWAY APPROACH REINFORCING.
5. IF JOINT EXISTS WITHIN 4 FEET OF DRIVEWAY, REMOVE SIDEWALK AND CURB AND GUTTER TO THAT JOINT.
6. ALL ADJACENT CONCRETE REMOVAL SHALL BE TO NEAT SAW CUT LINES AT RIGHT ANGLES. DOWEL INTO EXISTING ADJACENT CONCRETE DRIVEWAY APPROACH OR SIDEWALK WITH (2) No. 4 REINFORCEMENT BARS EQUALLY SPACED ACROSS WIDTH "W". DOWELS SHALL PENETRATE A MINIMUM OF 4" INTO EXISTING CONCRETE.
7. WEAKENED PLANE JOINTS SHALL BE CONSTRUCTED AT 5 FT INTERVALS AND IN ACCORDANCE WITH SECTION 312 OF THE SSPWC, AS ADOPTED BY CITY COUNCIL.
8. DETAIL S-111A SHALL NOT BE USED FOR NEW CONSTRUCTION UNLESS OTHERWISE APPROVED BY THE CITY ENGINEER.

STANDARD DETAILS FOR PUBLIC WORKS CONSTRUCTION		DRAWING No.
City of Sparks	NOTES - P.C.C. DRIVEWAY APRON	S-111C
		APPROVED BY: JE / DATE: 1/2020

NOTES:

1. TRAVELED ROADS OR ROAD SHOULDERS THAT ARE NOT PAVED SHALL BE BACKFILLED WITH CLASS E MATERIAL COMPACTED TO 90% MAX. DENSITY. THE FINISH SURFACE SHALL MATCH THE CONDITIONS WHICH EXISTED PRIOR TO CONSTRUCTION.
2. ANY CONDITIONS OF AN ENCROACHMENT OR RIGHT-OF-WAY PERMIT WHICH MAY DIFFER FROM THE ABOVE WILL GOVERN IN APPLICABLE AREAS.
3. FOR UNSUPPORTED TRENCHES, OR THOSE TRENCHES SUPPORTED BY HYDRAULIC JACKS, THE ALLOWABLE TRENCH WIDTH SHALL BE LIMITED TO THE PIPE DIAMETER PLUS 12-INCHES (MINIMUM) OR THE PIPE DIAMETER PLUS 24-INCHES (MAXIMUM). WHEN MOVEABLE TYPE TRENCH SHIELDS ARE USED, THE SHIELD SHALL REST ON TOP OF A SHELF CONSTRUCTED ABOVE THE TOP OF THE PIPE AND TO THE SIDE. THE TRENCH WIDTH FROM THE TOP OF THE PIPE DOWN SHALL BE THE SAME AS FOR UNSUPPORTED TRENCHES. THE TRENCH WIDTH ABOVE THE TOP OF THE PIPE SHALL BE AS REQUIRED FOR THE MOVEABLE SHIELD AND SHELF. WHERE MOVEABLE TRENCH SHIELDS ARE USED BELOW THE TOP OF PIPE, THE TRENCH WIDTH SHALL BE A MINIMUM OF 2-1/2 PIPE DIAMETERS ON EITHER SIDE OF THE PIPE. THIS IS TO PREVENT DISTURBING THE PIPE OR ITS EMBEDMENT WHILE PULLING THE SHIELD FORWARD. ALL TRENCHING MUST CONFORM TO OSHA TRENCHING AND EXCAVATION SAFETY SPECIFICATIONS, AS ADOPTED BY CITY COUNCIL.
4. BURIED WARNING AND IDENTIFICATION TAPE SHALL BE POLYETHYLENE PLASTIC, METALLIC CORE DETECTABLE MARKING TAPE. AWWA, APWA, ACID AND ALKALI RESISTANT, PERMANENT MARKING, UNAFFECTED BY MOISTURE OR SOIL, MINIMUM FIVE (5) MILS THICK BY 3-INCHES WIDE. WARNING TAPE SHALL BE MANUFACTURED SPECIFICALLY FOR LOCATING, WARNING, AND IDENTIFICATION OF BURIED UTILITY LINES. APWA COLOR CODED PURPLE FOR RECLAIMED WATER WITH WARNING AND IDENTIFICATION IMPRINTED IN BOLD BLACK LETTERS CONTINUOUSLY OVER THE ENTIRE TAPE LENGTH. WARNING AND IDENTIFICATION TO READ, "CAUTION: BURIED RECLAIMED WATER LINE BELOW" OR SIMILAR.
5. CLASS C BACKFILL PER SSPWC SECTION 200.03.04 MAY BE USED UNDER SPECIAL CONDITIONS WITH RECOMMENDATION BY THE DESIGN ENGINEER AND APPROVAL BY THE CITY OF SPARKS.

STANDARD DETAILS FOR PUBLIC WORKS CONSTRUCTION		DRAWING No.
City of Sparks	TYPICAL TRENCH SECTION (RECLAIMED WATER TREATED EFFLUENT)	S-504B
		APPROVED BY: JE / DATE: 1/2020

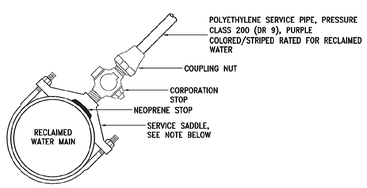

NOTES:

1. SADDLE TAP AND CORPORATION STOP SHALL BE THE SAME SIZE AS SERVICE LINE.
2. TAP SIZE SHALL NOT EXCEED MANUFACTURER'S RECOMMENDATIONS BASED ON MAINLINE SIZE. FOR LARGER TAPS IN EXCESS OF 2-INCH, USE TAPPING SLEEVE OR CUT-IN TEE.
3. SERVICE SADDLE SHALL BE A FACTORY FUSION BONDED EPOXY COATED OR NYLON COATED SADDLE WITH DOUBLE STAINLESS STEEL STRAP. PROVIDE CLAMP GASKET SUITABLE FOR USE WITH POTABLE WATER. MINIMUM WORKING PRESSURE OF 200 PSIG.
4. CORPORATION STOP. BRONZE ALLOY BODY WITH THREADED AND/OR COMPRESSION TYPE CONNECTIONS SUITABLE FOR SERVICE INTENDED. MINIMUM WORKING PRESSURE OF 200 PSIG.

STANDARD DETAILS FOR PUBLIC WORKS CONSTRUCTION		DRAWING No.
City of Sparks	RECLAIMED WATER 1-1/2" & 2" SERVICE TAP	S-505
		APPROVED BY: JE / DATE: 1/2020

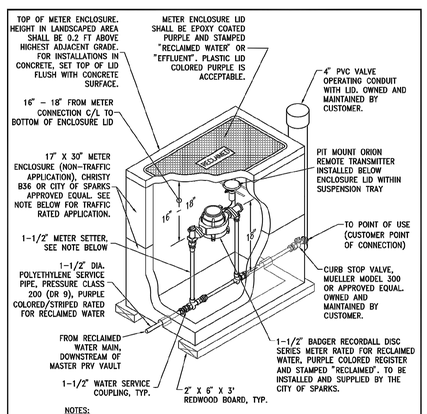

NOTES:

1. FOR DRIVEWAY OR INCIDENTAL TRAFFIC AREAS USE 17" X 30" ENCLOSURE AND LID APPROVED FOR TRAFFIC RATED H/20 LOADING. CHRISTY B1730 OR CITY OF SPARKS APPROVED EQUAL.
2. 1-1/2" METER SETTER SHALL BE EQUIPPED WITH KEY OR BALL VALVE INLET AND ANGLE CHECK VALVE OUTLET, FIP INLET AND OUTLET CONNECTIONS. SETTER SHALL NOT BE EQUIPPED WITH BYPASS. FORD 70 SERIES OR CITY OF SPARKS APPROVED EQUAL.
3. INSTALL TWO (2), 4' X 4' X 3/32" METER PIT INSULATING BLANKETS OVER METER AND SETTER.

STANDARD DETAILS FOR PUBLIC WORKS CONSTRUCTION		DRAWING No.
City of Sparks	1-1/2" RECLAIMED WATER METER	S-506
		APPROVED BY: JE / DATE: 1/2020

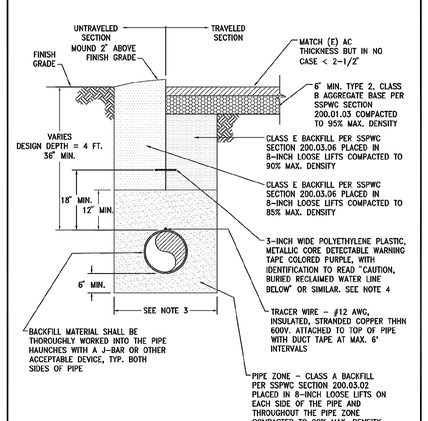

STANDARD DETAILS FOR PUBLIC WORKS CONSTRUCTION		DRAWING No.
City of Sparks	TYPICAL TRENCH SECTION (RECLAIMED WATER TREATED EFFLUENT)	S-504A
		APPROVED BY: JE / DATE: 1/2020

CITY OF SPARKS APPROVAL

1/5/2024

JON R. ERICSON, P.E., PTOE
City Engineer

tsk

225 South Arlington Avenue,
Suite A
Reno NV, 89501
phone: 775.857.2949
fax: 775.857.2403
www.tska.com

THESE DRAWINGS AND SPECIFICATIONS ARE THE PROPERTY OF TATE SNYDER KIMSEY ARCHITECTS AND MAY NOT BE REPRODUCED OR USED FOR ANY PURPOSE WITHOUT THE ARCHITECTS WRITTEN CONSENT. AS INSTRUMENTS OF SERVICE, THESE DOCUMENTS ARE NOT FINAL AND READY FOR USE, AND THEREFORE NOT VALID, UNLESS THEY ARE SEALED, SIGNED AND DATED.

Copyright, Ltd 2023

Consultant

WOOD RODGERS
BUILDING RELATIONSHIPS ONE PROJECT AT A TIME
1361 Corporate Boulevard
Reno, NV 89502
Tel 775.823.4068
Fax 775.823.4066

PLEASE RECYCLE

Project

SPARKS Fire Station #6

6963 SCHEIDBAR ROAD
SPARKS, NEVADA 89436

Job No: 22-043

Owner

CITY OF SPARKS

CITY OF SPARKS FIRE DEPARTMENT Est. 1905

REGISTERED PROFESSIONAL ENGINEER
MATTHEW J. ROULIAS
Exp 12-31-25
CIVIL
No. 18709
STATE OF NEVADA

01/04/2024

BID SET

REVISIONS		
REV	DATE	DESCRIPTION
1	05/31/23	CITY COMMENT REVISIONS
2	08/21/23	TWMA & NVEnergy REVISIONS
3	09/20/23	TWMA & NVEnergy REVISIONS
4	10/17/23	ADDED NEW PARCELS FROM PM 5686
5	01/03/24	BID SET REVIEW & COORDINATION

Sheet Title

DETAIL SHEET

Date: APRIL 12, 2023

Sheet No:

D-3

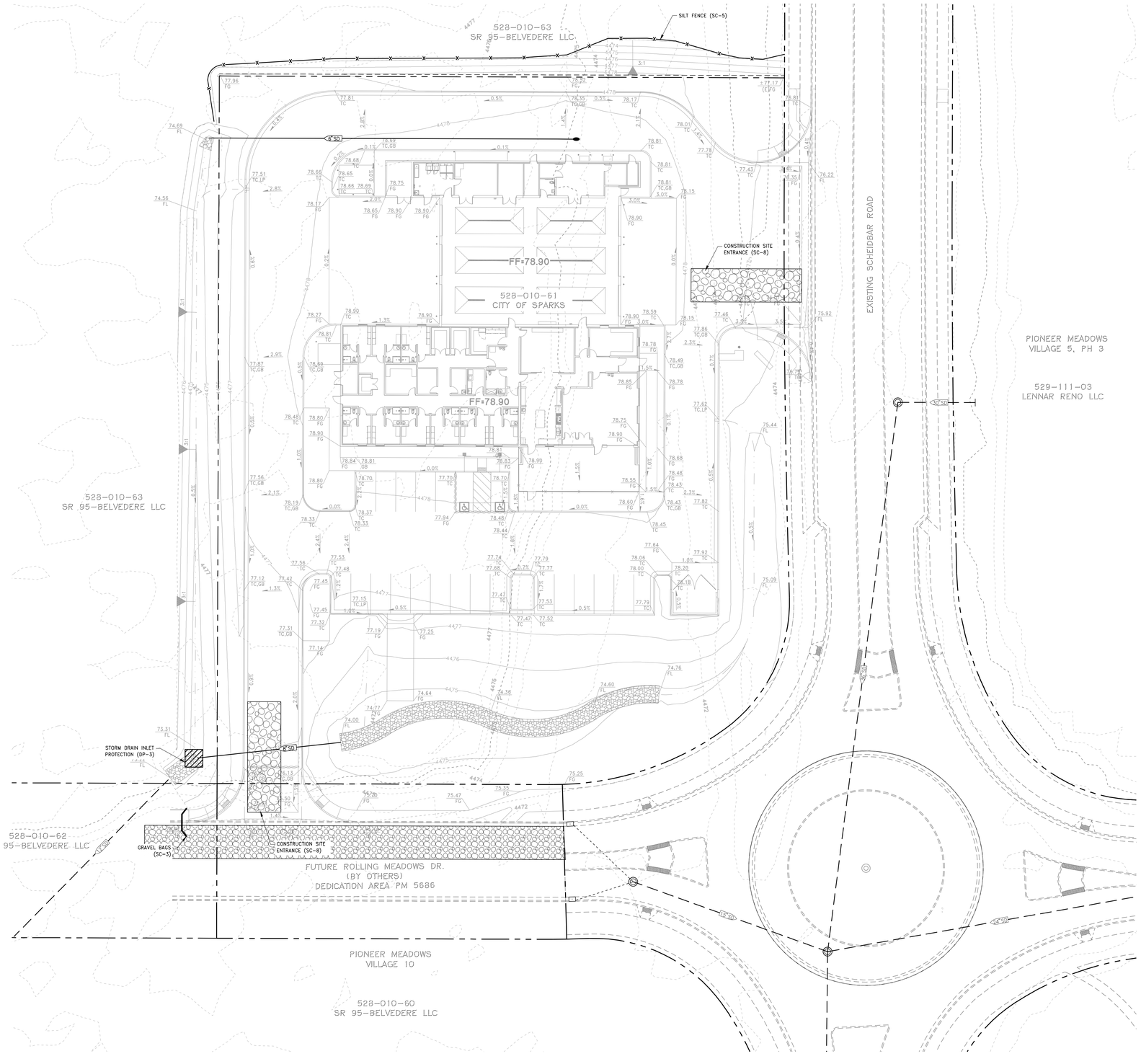

20' 10' 0 20'

SCALE: 1" = 20'

LEGEND

- FIBER ROLL (SC-1)
- CONSTRUCTION SITE ENTRANCE (SC-8)
- STORM DRAIN INLET PROTECTION (DP-3) (AT ALL CATCH BASINS)
- GRAVEL BAGS (SC-3)
- SILT FENCE (SC-5)
- RIPRAP (EC-7)

NOTES

1. THE OWNER, SITE DEVELOPER, CONTRACTOR AND/OR THEIR AUTHORIZED AGENTS SHALL EACH DAY REMOVE ALL SEDIMENT, MUD, CONSTRUCTION DEBRIS, OR OTHER POTENTIAL POLLUTANTS THAT MAY HAVE BEEN DISCHARGED TO, OR ACCUMULATE IN, THE PUBLIC RIGHTS OF WAYS OF THE CITY OF SPARKS AS A RESULT OF CONSTRUCTION ACTIVITIES ASSOCIATED WITH THIS SITE DEVELOPMENT OR CONSTRUCTION PROJECT. SUCH MATERIALS SHALL BE PREVENTED FROM ENTERING THE STORM SEWER SYSTEM.
2. ADDITIONAL CONSTRUCTION SITE DISCHARGE BEST MANAGEMENT PRACTICES MAY BE REQUIRED OF THE OWNER AND HIS OR HER AGENTS DUE TO UNFORESEEN EROSION PROBLEMS OR IF THE SUBMITTED PLAN DOES NOT MEET THE PERFORMANCE STANDARDS SPECIFIED IN THE CITY OF SPARKS AND THE TRUCKEE MEADOWS CONSTRUCTION SITE BEST MANAGEMENT PRACTICES HANDBOOK.
3. TEMPORARY OR PERMANENT STABILIZATION PRACTICES WILL BE INSTALLED ON DISTURBED AREAS AS SOON AS PRACTICABLE AND NO LATER THAN 14 DAYS AFTER THE CONSTRUCTION ACTIVITY IN THAT PORTION OF THE SITE HAS TEMPORARILY OR PERMANENTLY CEASED. SOME EXCEPTIONS MAY APPLY; REFER TO STORMWATER GENERAL PERMIT NVR100000, SECTION 1.B.1.b.(2).
4. AT A MINIMUM, THE CONTRACTOR OR HIS AGENT SHALL INSPECT ALL DISTURBED AREAS, AREAS USED FOR STORAGE OF MATERIALS AND EQUIPMENT THAT ARE EXPOSED TO PRECIPITATION, VEHICLE ENTRANCE AND EXIT LOCATIONS AND ALL BMPs WEEKLY, PRIOR TO A FORECASTED RAIN EVENT AND WITHIN 24 HOURS AFTER ANY ACTUAL RAIN EVENT. THE CONTRACTOR OR HIS AGENT SHALL UPDATE OR MODIFY THE STORMWATER POLLUTION PREVENTION PLAN AS NECESSARY. SOME EXCEPTIONS TO WEEKLY INSPECTIONS MAY APPLY, SUCH AS FROZEN GROUND CONDITIONS OR SUSPENSION OF LAND DISTURBANCE ACTIVITIES. REFER TO STORMWATER GENERAL PERMIT NVR100000, SECTION 1.B.1.g.
5. ACCUMULATED SEDIMENT IN BMPs SHALL BE REMOVED WITHIN SEVEN DAYS AFTER A STORMWATER RUNOFF EVENT OR PRIOR TO THE NEXT ANTICIPATED STORM EVENT WHICHEVER IS EARLIER. SEDIMENT MUST BE REMOVED WHEN BMP DESIGN CAPACITY HAS BEEN REDUCED BY 50 PERCENT OR MORE.
6. TOTAL DISTURBED AREA IS APPROXIMATELY 2.1 ACRES.
7. A COPY OF THE NOTICE OF INTENT (NOI), LETTER OF AUTHORIZATION FROM NDEP, AND SWPPP SHALL BE KEPT ON SITE AT ALL TIMES. CONTRACTOR SHALL FOLLOW REQUIREMENTS SET FORTH IN THE SWPPP AT ALL TIMES.
8. CONTRACTOR SHALL MODIFY PLAN AS NEEDED TO PROVIDE CONTINUOUS PROTECTION FROM STORM WATER RUNOFF.
9. CONTRACTOR SHALL CREATE A LOCATION FOR HANDLING AND DISPOSING OF CONCRETE AND CEMENT AND FOR VEHICLE MAINTENANCE.

CITY OF SPARKS APPROVAL

1/5/2024

JON R. ERICSON, P.E., PTOE
City Engineer

tsk

225 South Arlington Avenue,
Suite A
Reno NV, 89501
phone: 775.857.2949
fax: 775.857.2403
www.tska.com

THESE DRAWINGS AND SPECIFICATIONS ARE THE PROPERTY OF TATE SNYDER KIMSEY ARCHITECTS AND MAY NOT BE REPRODUCED OR USED FOR ANY PURPOSE WITHOUT THE ARCHITECTS WRITTEN CONSENT. AS INSTRUMENTS OF SERVICE, THESE DOCUMENTS ARE NOT FINAL AND READY FOR USE, AND THEREFORE NOT VALID, UNLESS THEY ARE SEALED, SIGNED AND DATED.

Copyright, Ltd 2023

Consultant

WOOD RODGERS
BUILDING RELATIONSHIPS ONE PROJECT AT A TIME
1361 Corporate Boulevard
Reno, NV 89502
Tel 775.823.4068
Fax 775.823.4066

PLEASE RECYCLE

Project

SPARKS Fire Station #6

6963 SCHEIDBAR ROAD
SPARKS, NEVADA 89436

Job No: 22-043

Owner

CITY OF SPARKS

MATTHEW J. ROULIAS
Exp. 12-31-25
CIVIL
No. 18708
STATE OF NEVADA
PROFESSIONAL ENGINEER

01/04/2024

BID SET

REVISIONS

REV	DATE	DESCRIPTION
1	05/31/23	CITY COMMENT REVISIONS
2	08/21/23	TWWA & NVEnergy REVISIONS
3	09/20/23	TWWA & NVEnergy REVISIONS
4	10/17/23	ADDED NEW PARCELS FROM PM 5686
5	01/03/24	BID SET REVIEW & COORDINATION

Sheet Title

EROSION CONTROL PLAN

Date: APRIL 12, 2023

Sheet No:

EC-1

GENERAL PROJECT NOTES

1. ALL WORK SHALL BE DONE IN ACCORDANCE WITH THESE PLANS, DETAILS, AND SPECIFICATIONS, AND PER THE GOVERNING MUNICIPALITY CODES AND REQUIREMENTS.

2. THE CONTRACTOR SHALL CAREFULLY INSPECT THE SITE AND VERIFY ALL CONDITIONS AND DIMENSIONS PRIOR TO PROCEEDING WITH ANY WORK DESCRIBED HEREIN. THE CONTRACTOR SHALL NOTIFY THE LANDSCAPE ARCHITECT OF ANY DISCREPANCIES WITH THESE DOCUMENTS PRIOR TO BEGINNING ANY CONSTRUCTION.

3. THE CONTRACTOR SHALL CARRY ALL WORKER'S COMPENSATION, PUBLIC LIABILITY, AND PROPERTY DAMAGE INSURANCE AS REQUIRED BY THE OWNER.

4. HOLD HARMLESS AND INDEMNIFICATION CLAUSE - THE CONTRACTOR SHALL AGREE THAT IN ACCORDANCE WITH GENERALLY ACCEPTED CONSTRUCTION PRACTICES, THE CONTRACTOR SHALL BE REQUIRED TO ASSUME SOLE AND COMPLETE RESPONSIBILITY FOR JOB SITE CONDITIONS DURING THE COURSE OF CONSTRUCTION OF THE PROJECT, INCLUDING SAFETY TO ALL PERSONS AND PROPERTY; THAT THIS REQUIREMENT SHALL BE MADE TO APPLY CONTINUOUSLY AND NOT BE LIMITED TO NORMAL WORKING HOURS; AND THAT THE CONTRACTOR SHALL DEFEND, INDEMNIFY, AND HOLD THE LANDSCAPE ARCHITECT HARMLESS FROM ANY AND ALL LIABILITY; REAL OR ALLEGED, IN CONNECTION WITH THE PERFORMANCE OF WORK ON THIS PROJECT, EXCEPTING FOR LIABILITY ARISING FROM THE SOLE NEGLIGENCE OF THE LANDSCAPE ARCHITECT.

5. DAMAGE RESPONSIBILITY - CONTRACTOR SHALL ASSUME FULL RESPONSIBILITY FOR ANY DAMAGE IMPOSED, INTENTIONALLY OR ACCIDENTALLY, TO EXISTING UTILITIES, BUILDINGS, OR OTHER AMENITIES, DUE TO THE ACTIONS OF THE CONTRACTOR, CONTRACTOR'S EMPLOYEES, AND/OR CONTRACTOR'S SUB-CONTRACTORS. CONTRACTOR SHALL AT ALL TIMES PROTECT THEIR WORK FROM DAMAGE AND THEFT AND REPLACE ALL DAMAGED OR STOLEN ITEMS OR PARTS AT THE CONTRACTOR'S EXPENSE UNTIL THE WORK IS ACCEPTED IN WRITING FROM THE OWNER.

6. UNAUTHORIZED CHANGES TO THE PLANS - THE LANDSCAPE ARCHITECT PREPARING THESE PLANS SHALL NOT BE RESPONSIBLE FOR, OR LIABLE FOR, UNAUTHORIZED CHANGES TO OR USES OF THESE PLANS. ALL CHANGES TO THE PLANS MUST BE IN WRITING AND MUST BE APPROVED BY THE LANDSCAPE ARCHITECT AND THE GOVERNING MUNICIPALITY TO THE COMMENCEMENT OF ANY WORK.

7. THE CONTRACTOR SHALL APPLY, OBTAIN, AND PAY FOR ALL REQUIRED PERMITS TO COMPLETE THE SCOPE OF WORK CONTAINED IN THESE DOCUMENTS.

8. TRADE COORDINATION - CONSTRUCTION AND INSTALLATION OF ALL ITEMS WITHIN THESE DOCUMENTS SHALL REQUIRE CLOSE COORDINATION BETWEEN TRADES INVOLVED IN UNDERGROUND AND UTILITY INSTALLATION, AND TREE LOCATIONS. CONTRACTOR SHALL BE RESPONSIBLE TO INSURE PROPER COORDINATION BETWEEN TRADES TO INSURE AND AVOID CONSTRUCTION DELAYS OR DAMAGE TO ANY IMPROVEMENTS OR UTILITIES. ANY COORDINATION PROBLEMS SHALL BE IMMEDIATELY REPORTED TO THE OWNER OR OWNER'S REPRESENTATIVE.

9. UNDERGROUND SERVICE ALERT - CONTRACTOR SHALL NOTIFY NEVADA UNDERGROUND SERVICES ALERT 48 HOURS PRIOR TO DIGGING AT 1-800-642-2444. THE CONTRACTOR SHALL EXERCISE EXTREME CARE IN WORKING NEAR EXISTING UTILITIES. THE CONTRACTOR SHALL VERIFY THE LOCATION AND CONDITION OF ALL UTILITIES PRIOR TO THE CONSTRUCTION.

10. INSPECTIONS - THE CONTRACTOR SHALL BE RESPONSIBLE FOR NOTIFYING THE MUNICIPALITY REPRESENTATIVE AT LEAST 48 HOURS IN ADVANCE PRIOR TO ANY REQUIRED MUNICIPAL INSPECTIONS. THE CONTRACTOR SHALL ALSO NOTIFY THE LANDSCAPE ARCHITECT 48 HOURS IN ADVANCE PRIOR TO ANY REQUIRED INSPECTION PER THE PROJECT SPECIFICATIONS.

11. WRITTEN DIMENSIONS SHALL TAKE PRECEDENCE OVER SCALED DIMENSIONS AND SHALL BE VERIFIED ON THE JOB SITE. ANY DISCREPANCIES SHALL BE BROUGHT TO THE ATTENTION OF THE LANDSCAPE ARCHITECT PRIOR TO THE COMMENCEMENT OF WORK.

12. THE LANDSCAPE ARCHITECT SHALL DECIDE ALL QUESTIONS RELATING TO THE INTERPRETATION OF THE DRAWINGS AND THE ACCEPTABLE FULFILLMENT OF THE CONTRACT DOCUMENTS.

13. THE CONTRACTOR SHALL MAINTAIN A CLEAN PREMISES WHICH WILL BE FREE OF EXCESS EQUIPMENT, MATERIAL, AND RUBBISH INCIDENTAL OF HIS/HER/THEIR WORK AT ALL TIMES INCLUDING WEEKENDS AND HOLIDAYS. ALL RUBBLE, TRASH, DEBRIS, OR DISPOSABLE ITEMS RESULTING FROM THE DEMOLITION OF CONSTRUCTION SHALL BE DISPOSED OF IN A LEGAL, LAWFUL, AND SAFE MANNER TO AN APPROVED DISPOSAL SITE.

14. ANY AND ALL PROPOSED SUBSTITUTIONS MUST BE SUBMITTED BY THE CONTRACTOR FOR REVIEW AS AN APPROVED EQUAL.

RECLAIMED WATER TREATED EFFLUENT GENERAL NOTES

1. ALL COVERS FOR METER BOXES, VALVE BOXES, FLUSH VALVES, PRESSURE REDUCING VAULTS, AIR/VAC RELEASE ASSEMBLIES, AND ALL OTHER APPURTENANCES REQUIRING VAULTS OR BOXES SHALL BE PURPLE IN COLOR (PANTONE COLOR #512), LABELED "RECLAIMED WATER" OR "EFFLUENT", AND HAVE SECURED OR LOCKING LIDS. PURPLE COLORATION SHALL BE OBTAINED FROM THE MANUFACTURER OR BE APPLIED BY POWDER COATING OR EPOXY PAINT. ALL APPURTENANCES SHALL HAVE A PURPLE TAG ATTACHED WITH THE WORDING "WARNING RECYCLED/RECLAIMED WATER DO NOT DRINK" AND "AVISO AGUA IMPURA NO TOMAR" (T. CHRISTY ENTERPRISES, MAXI VALVE IDENTIFICATION TAG, ID-MAX-P2-RC006 OR CITY OF SPARKS APPROVED EQUAL). A DEBRIS CAP WITH PURPLE COLORATION SHALL BE INSTALLED INSIDE OF ALL ROUND BOXES.

2. ALL ABOVE GROUND PIPING SHALL BE EPOXY PAINTED PURPLE (PANTONE COLOR #512) AND HAVE A PURPLE TAG ATTACHED WITH THE WORDING "WARNING RECYCLED/RECLAIMED WATER DO NOT DRINK" AND "AVISO AGUA IMPURA NO TOMAR" (T. CHRISTY ENTERPRISES, MAXI VALVE IDENTIFICATION TAG, ID-MAX-P2-RC006 OR CITY OF SPARKS APPROVED EQUAL).

3. ALL QUICK COUPLER VALVES SHALL HAVE PURPLE, LOCKABLE COVERS (RAIN BIRD 44NP OR CITY OF SPARKS APPROVED EQUAL).

4. ALL IRRIGATION CONTROLLER ENCL0SURES SHALL BE LABELED INSIDE AND OUTSIDE WARNING THAT THE SYSTEM USES RECLAIMED WATER (T. CHRISTY ENTERPRISES, CONTROLLER MARKING DECAL, PART NUMBER #ID-4100, OR CITY OF SPARKS APPROVED EQUAL).

5. DIRECT CONNECTIONS BETWEEN POTABLE WATER PIPING AND RECLAIMED WATER PIPING SHALL NOT EXIST UNDER ANY CONDITION, WITH OR WITHOUT BACKFLOW PROTECTION. REFERENCE SECTION 603.3.5 OF THE UNIFORM PLUMBING CODE, LATEST EDITION.

6. EACH EFFLUENT SERVICE CONNECTION SHALL INCLUDE A METER PROVIDED BY THE CITY OF SPARKS, UNLESS OTHERWISE STATED IN THE EFFLUENT AGREEMENT WITH THE CITY OF SPARKS.

7. TRACER WIRE SHALL BE PROVIDED FOR ALL DISTRIBUTION RECLAIMED WATER LINES AND SERVICE LATERALS AND SHALL BE PLACED ON TOP OF PIPE AND ATTACHED WITH DUCT TAPE AT 6 FEET MAXIMUM INTERVALS. AT 500 FEET INTERVALS, TRACER WIRE SHALL BE EXTENDED INTO SEPARATE TEST STATIONS CONSISTING OF RISERS AND VALVE BOXES. TEST LEAD WIRE SHALL BE LONG ENOUGH TO EXTEND FOUR (4) FEET ABOVE GROUND LEVEL AND SHALL TERMINATE IN TEST STATION BOX. TRACER WIRE SHALL BE ATTACHED TO SERVICE LATERALS WITH DUCT TAPE AT 3 FEET MAXIMUM INTERVALS, AND SHALL BE LONG ENOUGH TO EXTEND FOUR (4) FEET ABOVE GROUND AND SHALL TERMINATE IN METER BOX. TRACER WIRE SHALL BE PROVIDED FOR ALL IRRIGATION RECLAIMED WATER PIPING 3-INCH DIAMETER AND LARGER, BOTH WITHIN PUBLIC RIGHT-OF-WAY AND PRIVATE PROPERTY, AND SHALL BE PLACED ON TOP OF PIPE AND ATTACHED WITH DUCT TAPE AT 6 FEET MAXIMUM INTERVALS. TRACER WIRE SHALL BE LONG ENOUGH TO EXTEND FOUR (4) FEET ABOVE GROUND AND SHALL TERMINATE IN APPROPRIATE IRRIGATION CONTROL/VALVE BOX AT MAXIMUM 500 FEET INTERVALS. WIRE SHALL BE #12 AWG, INSULATED, STRANDED COPPER, THHN 600V. PRIOR TO ACCEPTANCE OF THE RECLAIMED WATERLINE(S) BY THE CITY OF SPARKS, THE CONTRACTOR SHALL PERFORM A CONTINUITY TEST AFTER BACKFILLING THE TRENCH TO THE SATISFACTION OF THE CITY OF SPARKS INSPECTOR AND/OR ENGINEER.

8. ALL BURIED IRRIGATION PIPING UPSTREAM OF AN ELECTRICAL CONTROL VALVE SHALL BE PURPLE PLASTIC PIPE OR BE ENCASED IN PURPLE POLYETHYLENE OR BAGS LABELED "CAUTION: BURIED RECLAIMED WATER LINE BELOW" AT INTERVALS NO GREATER THAN 5 FEET. FOR POLYETHYLENE (PE) SERVICE PIPE, PURPLE STRIPES ARE ACCEPTABLE.

9. ALL PIPING DOWNSTREAM OF AN ELECTRIC CONTROL VALVE SHALL BE PURPLE PLASTIC OR HAVE PURPLE RECLAIMED WARNING TAPE PLACED ON TOP OF THE PIPE. THIS DOES NOT APPLY TO FLEXIBLE POLYETHYLENE TUBING USED IN DRIP ZONES.

10. BURIED WARNING AND IDENTIFICATION TAPE SHALL BE POLYETHYLENE PLASTIC, METALLIC CORE DETECTABLE WARNING TAPE. AWWA, APWA, ACID AND ALKALI RESISTANT, PERMANENT MARKING, UNAFFECTED BY MOISTURE OR SOIL, MINIMUM FIVE (5) MILS THICK BY 3-INCHES WIDE. WARNING TAPE SHALL BE MANUFACTURED SPECIFICALLY FOR LOCATING, WARNING, AND IDENTIFICATION OF BURIED UTILITY LINES. APWA COLOR CODED PURPLE FOR RECLAIMED WATER WITH WARNING AND IDENTIFICATION IMPRINTED IN BOLD BLACK LETTERS CONTINUOUSLY OVER THE ENTIRE TAPE LENGTH. WARNING AND IDENTIFICATION TO READ "CAUTION: BURIED RECLAIMED WATER LINE BELOW" OR SIMILAR.

11. SIGNAGE SHALL BE POSTED AT ALL POINTS OF PUBLIC ACCESS (GATES, DRIVEWAYS, ETC.) AND AT MINIMUM 300 FEET INTERVALS ALONG PROJECT FENCELINE OR BORDER. IF RECLAIMED WATER IS STORED IN PONDS, PROVIDE SIGNAGE AT PONDS. SIGNS SHALL BE BILINGUAL IN ENGLISH AND SPANISH. MINIMUM SIGN SIZE SHALL BE 9" X 12". REFERENCE CITY OF SPARKS RECLAIMED WATER TREATED EFFLUENT DETAIL S-502 (SEE 11/L2.02).

12. RECLAIMED WATER LINES SHALL BE TREATED AS SEWER LINES AND ALL APPLICABLE SEPARATION FROM POTABLE WATER LINES SHALL BE MAINTAINED, UNLESS OTHERWISE AUTHORIZED.

13. HOSE BIBS SHALL NOT BE INSTALLED ON RECLAIMED WATER SYSTEMS.

14. CITY OF SPARKS INSPECTOR SHALL BE NOTIFIED BEFORE ANY SECTION OF PIPELINE IS BURIED TO ALLOW FOR INSPECTION AND POSITIONAL GPS OF THE FACILITIES.

15. NEW DEVELOPMENT MUST CONFORM TO THE CITY OF SPARKS RECLAIMED WATER TREATED EFFLUENT DESIGN AND PERFORMANCE STANDARDS FOR DESIGN AND CONSTRUCTION.

GENERAL LANDSCAPE NOTES

THE LANDSCAPE CONTRACTOR SHALL PROVIDE ALL MATERIALS, LABOR, AND EQUIPMENT TO COMPLETE ALL LANDSCAPE WORK AS SHOWN ON THE PLANS AND SPECIFICATIONS.

1. THIS PLAN IS DIAGRAMMATIC ONLY AND IS A GRAPHIC REPRESENTATION OF ALL PROPOSED LANDSCAPE IMPROVEMENTS. CONTRACTOR TO FIELD VERIFY ALL EXISTING CONDITIONS IN COORDINATION WITH THIS PLAN. IF ANY DISCREPANCIES ARE FOUND IT IS THE RESPONSIBILITY OF THE CONTRACTOR TO NOTIFY THE LANDSCAPE ARCHITECT AND OWNER'S REPRESENTATIVE AT LEAST 48 HOURS PRIOR TO INSTALLATION OF LANDSCAPE IMPROVEMENTS. ALL LOCAL MUNICIPAL CODES OR GOVERNING CODES SHALL BE MET. COMMENCEMENT OF WORK SHALL CONSTITUTE ACCEPTANCE OF CONDITIONS AND RESPONSIBILITY FOR CORRECTIONS.

2. THE CONTRACTOR SHALL COORDINATE ALL WORK WITH OTHER TRADES (EARTHWORK, PAVING, ELECTRICAL, PLUMBING, ETC.)

3. A MINIMUM OF 48 HOURS PRIOR PERFORMING ANY TRENCHING, DIGGING, OR POTHOLE EXCAVATION, CALL UNDERGROUND SERVICE ALERT FOR INFORMATION REGARDING THE LOCATION OF ALL EXISTING UTILITIES (GAS, ELECTRICAL, OR CABLE ETC.). THE CONTRACTOR SHALL BE RESPONSIBLE FOR LOCATIONS AND PROTECTION OF ANY UTILITIES. ANY DAMAGE RESULTING FROM CONTRACTOR WORKING SHALL BE REPAIRED AT NO ADDITIONAL COST TO THE OWNER.

4. DURING DELIVERY AND INSTALLATION THE CONTRACTOR SHALL PERFORM IN A PROFESSIONAL MANNER, COORDINATING HIS/HER ACTIVITIES SO AS NOT TO INTERFERE UNDULY WITH THE WORK OF OTHER TRADES, AND LEAVING HIS/HER WORK AREAS CLEAN OF LITTER AND DEBRIS AT THE CLOSE OF EACH WORKDAY.

5. CONTRACTOR AGREES THAT IN ACCORDANCE WITH GENERALLY ACCEPTED CONSTRUCTION PRACTICES, CONTRACTOR ASSUMES SOLE AND COMPLETE RESPONSIBILITY FOR JOB SITE CONDITIONS DURING THE COURSE OF CONSTRUCTION OF THE PROJECT, INCLUDING SAFETY OF ALL PERSONS AND PROPERTY, THAT THIS REQUIREMENT SHALL BE MADE TO APPLY CONTINUOUSLY AND SHALL NOT BE LIMITED TO NORMAL WORKING HOURS AND CONTRACTOR FURTHER AGREES TO DEFEND, INDEMNIFY, AND HOLD HARMLESS THE OWNER FROM ANY AND ALL LIABILITY, REAL OR ALLEGED, IN CONNECTION WITH THE PERFORMANCE OF WORK ON THE PROJECT.

PLANTING NOTES:

6. CONTRACTOR IS RESPONSIBLE FOR ALL GRADES AND ALL GRADES SHALL BE APPROVED BY THE OWNER'S REP FOLLOWING IRRIGATION MAIN LINE INSTALLATION AND PRIOR TO ANY INSTALLATION OF PLANT MATERIAL.

7. THE CONTRACTOR IS RESPONSIBLE FOR PROVIDING ALL MATERIALS PER PLANS. IT IS THE RESPONSIBILITY OF THE CONTRACTOR TO VERIFY ALL QUANTITIES GRAPHICALLY SHOWN ON THE PLANS, WHICH INCLUDES, BUT NOT LIMITED TO, PLANT MATERIAL SYMBOLS AND SPACING, GROUND COVER MULCH QUANTITIES, BOULDERS, ETC. THE GRAPHIC HATCHES AND SYMBOLS ON THE PLANS PREVAIL OVER THE QUANTITIES LISTED IN THE PLANT LEGEND.

8. ALL PLANTS NOT MEETING OR EXCEEDING REQUIREMENTS AND RECOMMENDATIONS OF ANSI 260.1 "AMERICAN STANDARD FOR NURSERY STOCK' SHALL BE REJECTED AT ANY POINT DURING CONSTRUCTION. CONTRACTOR SHALL RECEIVE ON-SITE WRITTEN APPROVAL OF PLANT MATERIAL BY OWNER'S REP OR LANDSCAPE ARCHITECT PRIOR TO INSTALLATION. IF THE CONTRACTOR INSTALLS PLANT MATERIAL PRIOR TO WRITTEN ACCEPTANCE, IT IS THE RESPONSIBILITY OF THE CONTRACTOR TO CORRECT ANY DEFICIENCIES IN PLANT SIZE AT NO COST TO THE OWNER. THE OWNER'S REP AND LANDSCAPE ARCHITECT RESERVE THE RIGHT TO INSPECT AND EVALUATE PLANT MATERIAL THROUGHOUT THE CONSTRUCTION OR MAINTENANCE PERIOD.

9. ALL PLANT SUBSTITUTIONS SHALL BE REVIEWED AND ACTION TAKEN BY THE LANDSCAPE ARCHITECT PRIOR TO INSTALLATION. THE CONTRACTOR SHALL PROVIDE A "FOR CONSTRUCTION" PLANT LIST TO THE LANDSCAPE ARCHITECT A MIN. OF (10) TEN WORKING DAYS PRIOR TO ORDERING OF PLANT MATERIAL. FOR CONSTRUCTION PLANT LIST SHALL INCLUDE ANY SUBSTITUTIONS BASED ON AVAILABILITY. PLANT SIZES ARE BASED ON LOCAL GOVERNING CODE SO PLANT MATERIAL SIZES SHALL PREVAIL OVER SPECIES OF PLANT MATERIAL SELECTED.

10. THE CONTRACTOR SHALL GUARANTEE ALL PLANT MATERIALS FOR A MIN. OF (1) ONE YEAR FROM FINAL ACCEPTANCE OF THE PROJECT. ANY PLANTS REPLACED UNDER WARRANTY SHALL BE GUARANTEED FOR AN ADDITIONAL (1) ONE YEAR FROM DATE OF INSTALLATION.

11. PER RMC 18.12.1205(f)(4)a. TREES PLANTED OR REMOVED IN THE CITY OF RENO (IF APPLICABLE) PUBLIC RIGHT OF WAY ARE SUBJECT TO THE ISSUANCE OF A TREE WORK PERMIT. THE CONTRACTOR SHALL COMPLY WITH ALL REQUIREMENTS OF THE PERMIT AND THE CITY OF RENO (IF APPLICABLE) URBAN FORESTER.

OBSERVATIONS, APPROVALS, AND/OR SUBMITTALS:

12. CONTRACTOR IS RESPONSIBLE FOR PROVIDING WRITTEN NOTIFICATION TO OWNER'S REP AND LANDSCAPE ARCHITECT A MIN. OF (3) THREE WORKING DAYS IN ADVANCE FOR THE FOLLOWING SITE OBSERVATIONS AND/OR MEETINGS:
-PRE-CONSTRUCTION MEETING WITH ALL PARTIES
-PLANT MATERIAL ON-SITE, PRIOR TO INSTALLATION.
-OPEN TRENCH, MAINLINE WITH VALVES ATTACHED PRESSURE TEST AND INSPECTION.
-FINAL PROJECT WALK-THROUGH.
-PLANT WARRANTY PROJECT WALK-THROUGH PRIOR TO EXPIRATION OF WARRANTY PERIOD.
-ADDITIONAL SITE OBSERVATIONS AS DEEMED NECESSARY BY THE OWNER'S REP.

13. CONTRACTOR IS RESPONSIBLE FOR SUBMITTING SOIL AMENDMENT AND/OR ANY GROUND COVER MULCH SAMPLES TO THE OWNER'S REP FOR APPROVAL PRIOR TO INSTALLATION.

14. PLANT SUBSTITUTIONS - IT IS THE RESPONSIBILITY OF THE CONTRACTOR TO PROVIDE A FOR CONSTRUCTION PLANT LIST AS DESCRIBED ABOVE.

15. AS-BUILT DRAWINGS - IT IS THE RESPONSIBILITY OF THE CONTRACTOR TO PREPARE AND SUBMIT RECORD DRAWINGS DEPICTING A COMPLETE AS-BUILT CONSTRUCTION PLAN SET. CONTRACTOR IS TO IDENTIFY ANY FIELD RELOCATIONS OR CHANGES ON ALL LANDSCAPE PLANS. CONSTRUCTION DRAWINGS SHALL BE ON-SITE AT ALL TIMES AND ANY MODIFICATIONS FROM THE PLANS SHALL BE MARKED ON THE PLANS MAKING DAILY RECORD OF ALL WORK INSTALLED. PRIOR TO FINAL ACCEPTANCE OF PROJECT BY OWNER'S REP THE DAILY AS-BUILT DRAWINGS WILL BE CONVERTED TO A DIGITAL FORMAT BY THE CONTRACTOR AND TURNED OVER TO THE OWNER.

MAINTENANCE/WARRANTY

16. ALL PLANTED AREAS SHALL BE MAINTAINED FOR A MIN. PERIOD OF 60 DAYS FOLLOWING WRITTEN ACCEPTANCE BY THE OWNERS REP (UNLESS OTHERWISE NOTED BY OWNER'S REP). LANDSCAPE CONTRACTOR WILL GUARANTEE ALL PLANT MATERIAL FOR A PERIOD OF ONE FULL YEAR FOLLOWING FINAL ACCEPTANCE OF THE LANDSCAPE INSTALLATION BY THE OWNER'S AUTHORIZED REP. IN BIDDING AND INSTALLING THE PLANT MATERIAL AS SPECIFIED ON THESE PLANS THE CONTRACTOR IS AGREEING THAT THE PLANT MATERIAL SPECIFIED IS SUITABLE FOR THE PROJECT SITE. FURTHERMORE, THE CONTRACTOR AGREES TO HONOR THE WARRANTY AND, IF NECESSARY, REPLACE SPECIES WITH A MORE HARDY PLANT TYPE IF DEEMED NECESSARY DUE TO EXCESSIVE DIE OUT. IF THE CONTRACTOR BELIEVES A CERTAIN PLANT MATERIAL IS NOT SUITABLE FOR THE PROJECT SITE AND/OR MICRO CLIMATES, THE CONTRACTOR SHALL REQUEST TO MAKE PLANT MATERIAL SUBSTITUTIONS IN WRITING AS DESCRIBED ABOVE. PROPOSED SUBSTITUTIONS WILL NOT RESULT IN ANY ADDITIONAL COST TO THE OWNER.

LANDSCAPE REQUIREMENTS

ZONING: NUD (NEW URBAN DISTRICT - PIONEER MEADOWS)
DEVELOPED SITE AREA: 80,375 SF
USE: FIRE STATION
LANDSCAPE COVERAGE: (20%) 16,075 SF REQUIRED / 27,960 SF PROVIDED

TREES: 1 TREE PER 500 SF OF LANDSCAPE, 56 REQUIRED / 73 PROVIDED

- EVERGREEN: MIN SIZE AT PLANTING TO BE 6' HT.

41 PROVIDED AT 6' HT

- DECIDUOUS: MIN SIZE AT PLANTING TO BE 50% 2" CAL & 50% 1" CAL.

32 PROVIDED AT 2.5" CALIPER

BUFFER REQUIREMENTS:

- RESIDENTIAL ADJACENT TO NON-RESIDENTIAL SHALL HAVE EVERGREEN TREES PLANTED TO SCREEN BUILDING WALLS TO PROVIDE A VISUAL BARRIER PLANTED AT 20' ON CENTER.

5 TREES REQUIRED / 25 TREES PROVIDED
ADDITIONAL TREES PROVIDED TO SCREEN DUCTS AND UTILITIES

LANDSCAPE STRIP MIN. 10; WIDE ALONG PUBLIC STREET REQUIRED/PROVIDED

- 1 TREE/20LF REQUIRED, 13 REQUIRED / 19 PROVIDED

SHRUBS:

- 60% MIN. SIZE AT PLANTING TO BE 5 GAL.
- 40% MIN. SIZE AT PLANTING TO BE 1 GAL.

GROUNDCOVER: 100% REQUIRED WITH LIVING PLANTS AND/OR DG DECORATIVE ROCK.

IRRIGATION NOTES

1. ALL IRRIGATION EQUIPMENT TO BE LOCATED IN LANDSCAPE AREAS WITHIN PROPERTY BOUNDARIES OF THE PROJECT - ALL PIPE, SLEEVING AND EQUIPMENT ARE SCHEMATIC AND ARE SOMETIMES SHOWN IN ROADWAYS, SIDEWALKS,OR OUTSIDE PROPERTY LINES. THIS IS DONE FOR CLARITY PURPOSES ONLY.

2. DO NOT INSTALL THE IRRIGATION SYSTEM AS SHOWN ON THE DRAWINGS WHEN IT IS OBVIOUS IN THE FIELD THAT UNKNOWN OBSTRUCTIONS, GRADE DIFFERENCES, OR DIFFERENCES IN AREA DIMENSIONS EXIST THAT MIGHT NOT HAVE BEEN CONSIDERED IN THE ENGINEERING. SUCH OBSTRUCTIONS OR CONFLICTS SHOULD BE BROUGHT TO THE ATTENTION OF THE OWNER AND LANDSCAPE ARCHITECT IMMEDIATELY. IN THE EVENT THIS NOTIFICATION IS NOT PERFORMED, THE CONTRACTOR SHALL ASSUME FULL RESPONSIBILITY FOR ANY REVISIONS NECESSARY.

3. THE CONTRACTOR SHALL VERIFY AVAILABLE WATER PRESSURES AND FLOWS FROM IRRIGATION SUPPLY TANK AND AT ALL VALVES PRIOR TO CONSTRUCTION AND REPORT ANY FINDINGS TO THE LANDSCAPE ARCHITECT AND OWNER'S REPRESENTATIVE IMMEDIATELY.

4. ALL MATERIAL USED SHALL BE INSTALLED AS DETAILED. ALL IRRIGATION EQUIPMENT NOT OTHERWISE DETAILED OR SPECIFIED SHALL BE INSTALLED PER MANUFACTURER'S RECOMMENDATIONS AND SPECIFICATIONS. OWNER'S REPRESENTATIVE AND/OR LANDSCAPE ARCHITECT SHALL APPROVE ALL DEVIATION'S FROM DRAWINGS OR MATERIALS USED.

5. THE OWNER'S REPRESENTATIVE MAY, AT ANY TIME, TAKE AND ANALYZE SAMPLES OF MATERIALS AND EQUIPMENT FOR CONFORMITY TO SPECIFICATIONS.THE CONTRACTOR SHALL MAKE SUCH SAMPLES AVAILABLE UPON REQUEST. REJECTED MATERIAL SHALL BE IMMEDIATELY REMOVED FROM THE SITE AND REPLACED AT THE CONTRACTOR'S EXPENSE.

6. CONTRACTOR SHALL BE RESPONSIBLE FOR SUPPLYING MATERIALS AND LABOR TO PROVIDE SPECIFIED ELECTRICAL SERVICE CONNECTION TO ALL CONTROLLER LOCATIONS. ALL ELECTRICAL WORK TO BE PER MANUFACTURER'S SPECIFICATIONS AND PER LOCAL CODE.

7. ALL DRIP SYSTEMS TO BE FLUSHED THROUGH MANUAL BLOWOUTS. BLOWOUTS TO BE LOCATED IN 14" X 19" VALVE BOXES AND PLACED AT THE END OF ALL LATERALS.

8. THE CONTRACTOR SHALL PROVIDE CHECK VALVES AND AIR VACUUM RELIEF VALVES AS REQUIRED, OR AT THE DISCRETION OF THE LANDSCAPE ARCHITECT, TO EACH CIRCUIT THROUGHOUT THE IRRIGATION SYSTEM LOCATED WITHIN SLOPED AREAS TO PREVENT LOW IRRIGATION HEAD DRAINAGE.

9. UNLESS SPECIFICALLY NOTED ON PLANS, ALL PIPE SIZES SHALL CONFORM TO THE PIPE SIZING SCHEDULE SHOWN ON THIS SHEET. NO SUBSTITUTIONS OF SMALLER PIPE SIZES SHALL BE PERMITTED BUT SUBSTITUTIONS OF LARGER SIZES MAY BE APPROVED BY THE LANDSCAPE ARCHITECT. MAINLINE PIPE SHALL BE 1-INCH MINIMUM SIZE. LATERAL LINE SHALL BE 1-INCH MINIMUM SIZE.

10. ALL PLANTS SHALL HAVE DRIP EMITTERS DISTRIBUTED EVENLY AROUND PERIMETER OF PLANTING WELL. EMISSION POINTS AT ROOTBALLS SHALL BE LOCATED ON THE UPHILL SIDE, MIDWAY BETWEEN THE CENTER OF THE PLANT AND THE EDGE OF THE ROOTBALL.

11. LANDSCAPE CONTRACTOR IS RESPONSIBLE FOR ALL LANDSCAPE SLEEVING. COORDINATE INSTALLATION WITH THE GENERAL CONTRACTOR. VERIFY ANY EXISTING SLEEVES INSTALLED BY OTHER CONTRACTORS. INSTALL ALL SLEEVES BASED ON PIPE SLEEVING SCHEDULE ON THIS SHEET.

12. NOTIFY THE OWNER'S REPRESENTATIVE 48 HOURS PRIOR TO THE FOLLOWING REQUIRED STAGES OF OBSERVATION FOR:
MAINLINE: INSTALLATION, DEPTH, VALVES, WIRE, LINE PRESSURE TEST
EMITTER LATERALS: INSTALLATION, DEPTH, VALVES, EMITTERS, OUTLET TUBING, AT LINE PRESSURE
CONTROLLER: INSTALLATION, FUNCTIONING

13. PRIOR TO OWNER'S APPROVAL, AN IRRIGATION "TUNE UP" MUST BE PERFORMED AS FOLLOWS:
A. ALL IRRIGATION EQUIPMENT (INCLUDING ALL PIPELINES AND SLEEVES) TO BE DOCUMENTED FROM TWO STATIONARY POINTS.
B. ALL DRIP SYSTEMS TO BE FLUSHED BEGINNING WITH "Y" STRAINER, WORKING AWAY FROM THE PRESSURE REGULATOR.
C. ALL IRRIGATION DRIP EMITTERS SHALL BE CUT TO PROPER HEIGHT.
D. IRRIGATION VALVES TO BE LABELED ON A SHEET OF PAPER WITH STATIONS CORRESPONDING TO ETCHED LABELS ON TOP OF VALVE BOXES. THIS SHEET TO BE PLACED IN A PLASTIC POUCH AND ATTACHED TO INSIDE OF CONTROLLER.

14. LOCATE PURPLE VALVE BOXES IN PLANTING AREAS.

15. ALL MAINLINES AND IRRIGATION EQUIPMENT SHALL BE PLACED OUTSIDE THE RIGHT-OF-WAY AND PUBLIC UTILITY EASEMENTS.

16. CONTRACTOR TO INSTALL KING DRAINS AND PROVIDE PIPE ACCESS AND ABILITY TO BLOW OUT IRRIGATION LINES FOR FREEZE PROTECTION AND WINTERIZATION OF IRRIGATION SYSTEM.

17. IRRIGATION SYSTEM TO BE COMMISSIONED BY A RAIN BIRD AUTHORIZED SERVICE PROVIDER (ASP).

18. ALL TREES WILL HAVE TWO (36") ROOT WATERING SYSTEMS INSTALLED AS PER MANUFACTURER'S RECOMMENDATION WITH A PURPLE GRATE.

19. ONE PURPLE OPERATION INDICATOR SHALL BE INSTALLED PER VALVE IN A PLACE TO BE DETERMINED BY THE OWNER'S REPRESENTATIVE OR LANDSCAPE ARCHITECT.

20. ALL PVC FITTINGS SHALL BE SCHEDULE 80.

21. FINAL IRRIGATION SYSTEM IS REQUIRED TO BE INSPECTED AND RECEIVE CERTIFICATION BY RAINBIRD ASP FOR WARRANTY. CONTRACTOR MUST PROVIDE WRITTEN DOCUMENTATION OF THIS OFFICIAL CERTIFICATION PRIOR TO FINAL ACCEPTANCE OF THE IRRIGATION SYSTEM. CONTRACTOR IS RESPONSIBLE TO COORDINATION INSPECTION WITH MANUFACTURER'S APPROVED INSPECTOR.

PLANTING NOTES

1. PLANT MATERIAL SHALL BE APPROVED BY THE LANDSCAPE ARCHITECT PRIOR TO INSTALLATION. CONTRACTOR TO COORDINATE TREE SELECTION TIMEFRAME WITH OWNER'S REPRESENTATIVE ONCE BID HAS BEEN AWARDED. TREE SELECTION SHALL NOT CAUSE A DELAY IN MATERIAL DELIVERY AND WILL BE THE CONTRACTOR'S RESPONSIBILITY FOR PROPER COORDINATION. CONTRACTOR SHALL BE RESPONSIBLE FOR NOTIFYING THE OWNER'S REPRESENTATIVE AND COORDINATION AN INSPECTION OF THE PLANT MATERIAL THAT WILL BE DELIVERED TO THE JOB SITE AT LEAST 48 HOURS PRIOR TO DELIVERY. CONTRACTOR SHALL NOT DELAY THE CONSTRUCTION SCHEDULE DUE TO REJECTED PLANT MATERIAL. THE LANDSCAPE ARCHITECT, OR HIS/HER/THEIR REPRESENTATIVE, RESERVE THE RIGHT TO REFUSE ANY PLANT MATERIALS HE/SHE/THEY DEEMS UNACCEPTABLE.

2. ANY DISCREPANCIES BETWEEN THE DRAWINGS AND THE SITE, IT SHOULD BE BROUGHT TO THE ATTENTION OF THE LANDSCAPE ARCHITECT FOR CLARIFICATION PRIOR TO BEGINNING WORK.

3. ANY SUBSTITUTIONS SHALL BE APPROVED IN WRITING BY THE LANDSCAPE ARCHITECT.

4. ALL QUANTITIES INDICATED ON THE PLANS ARE PROVIDED AS A COURTESY ONLY. THE CONTRACTOR SHALL BE RESPONSIBLE FOR VERIFY ALL QUANTITIES SHOWN BY CONDUCTING AN INDEPENDENT TAKE OFF.

5. UNDER NO CIRCUMSTANCES SHALL A TREE BE PLANTED WITHIN 6' FROM ANY BUILDING WITHOUT THE EXPRESS WRITTEN APPROVAL OF THE LANDSCAPE ARCHITECT.

6. EXPOSED SOIL IN PLANTERS SHALL BE RAKED AND FREE FROM ROCKS, ROOTS, WEEDS, ETC.

7. PLANTS SHALL BE QUALITY MATERIAL HAVING A GROWTH HABIT WHICH IS NORMAL FOR THE SPECIES AND BE SOUND, VIGOROUS, HEALTHY, AND FREE FROM INSECTS AND INJURY.

8. GROUNDCOVER AND/OR DECORATIVE ROCK SHALL EXTEND UNDER SHRUBS UNLESS NOTED.

9. AFTER ALL WORK IS COMPLETED, THE CONTRACTOR SHALL REMOVE ALL MATERIALS NOT INCORPORATED IN THE SCOPE OF WORK FROM THE JOB SITE.

10. A PRE-EMERGENT HERBICIDE IS TO BE APPLIED TO ALL DECORATIVE ROCK AREAS BEFORE AND AFTER THE GRANITE HAS BEEN LAID. INCLUDE ALL RIVER ROCK AREAS, IF APPLICABLE. THE HERBICIDE SHOULD BE SNAPSHOT, SURFLAN, OR APPROVED EQUAL.

11. ALL PLANT MATERIAL TO BE GUARANTEED FOR A PERIOD OF ONE (1) YEAR AFTER FINAL ACCEPTANCE.

12. CONTRACTOR SHALL MAINTAIN A MINIMUM OF 3'- 0" CLEARANCE AROUND ALL FIRE HYDRANTS, TRANSFORMERS, AND 10'-0" FROM STREET LIGHTS AS NECESSARY.

13. ALL PLANT MATERIAL TO MEET OR EXCEED ARIZONA NURSERY ASSOCIATION STANDARDS FOR RECOMMENDED TREE SIZES.

14. ALL PLANT MATERIAL LOCATIONS SHALL BE INSPECTED AND APPROVED BY THE LANDSCAPE ARCHITECT PRIOR TO ANY HOLES DUG.

15. IT IS THE RESPONSIBILITY OF THE LANDSCAPE CONTRACTOR TO INFORM THE LANDSCAPE ARCHITECT/ OWNER OF ANY PLANT MATERIAL CONCERNS BASED ON PLANTING SEASON (I.E. WINTER, SUMMER). SHOULD THE LANDSCAPE CONTRACTOR HAVE ANY CONCERNS ABOUT PLANT MATERIAL DUE TO HEAT/ FROST OR EXPOSURE, HE/SHE/THEY SHALL REQUEST A SUBSTITUTION OR DELAY IN PLANTING. ONCE PLANTED, ALL PLANT MATERIAL IS SUBJECT TO SPECIFIED WARRANTIES.

16. GRADING SHALL INCLUDE ALL EXCAVATION, SETTLEMENT, HANDLING, IMPORT, DISTRIBUTION, TRANSPORTATION, AND DISPOSAL NECESSARY TO BRING GROUND TO FINISH GRADE AS SHOWN ON THE PLAN (ONCE GENERAL CONTRACTOR HAS PROVIDED FINISH GRADE WITHIN 1/10 OF 1').

17. FINISHED GRADE OF DECORATIVE ROCK GROUNDCOVER AREAS SHALL BE 1" BELOW ADJACENT HEADER, PAVING, CURBING, ETC.

18. LANDSCAPE CONTRACTOR SHALL BE RESPONSIBLE FOR PROVIDING ALL FINISHED GRADES.

19. LANDSCAPE CONTRACTOR IS RESPONSIBLE FOR PROVIDING POSITIVE DRAINAGE AWAY FROM ALL STRUCTURES AND BUILDINGS DURING THE FINISH GRADING PROCESS. NO PUDDLING SHALL OCCUR ALONG EDGES OF STRUCTURES AND BUILDINGS OR IN LANDSCAPE AREAS.

20. CONTRACTOR SHALL PROVIDE A MINIMUM 48-HOUR NOTICE FOR TREE/PLANT INSPECTIONS.

IRRIGATION SCHEDULE

SYMBOL	MANUFACTURER/MODEL/DESCRIPTION	QTY	DETAIL
1401 1402 1404 1408	RAIN BIRD RWS-B-C-P W/ RWS-SOCK 1400 SERIES ROOT WATERING SYSTEM WITH 4IN. DIAMETER X 36IN. LONG WITH LOCKING GRATE, SEMI-RIGID MESH TUBE. CHECK VALVE, PURPLE GRATE, AND SAND SOCK. RAIN BIRD BUBBLER OPTION AS INDICATED: 1401 0.25 GPM, 1402 0.5 GPM, 1404 1.0 GPM, 1408 2.0 GPM.	144	8/L2.02
SYMBOL	MANUFACTURER/MODEL/DESCRIPTION	QTY	DETAIL
	RAIN BIRD XCZ-100-IVMQ WIDE FLOW IVM DRIP CONTROL KIT FOR COMMERCIAL APPLICATIONS. 1IN. BALL VALVE WITH 1IN. PESBIVM SMART VALVE W/ FACTORY INSTALLED IVM-SOL 0.3-20 GPM AND 1IN. PRESSURE REGULATING 40PSI QUICK-CHECK BASKET FILTER 0.3-20 GPM	15	10/L2.02
AREA NOT SHOWN	AREA TO RECEIVE DRIP EMITTERS RAIN BIRD XB-PC-1032 SINGLE OUTLET, PRESSURE COMPENSATING DRIP EMITTERS. FLOW RATES OF 0.5 GPH=BLUE, 1.0 GPH=BLACK, AND 2.0 GPH=RED. COMES WITH A 10-32 THREADED INLET X BARB OUTLET.		7/L2.02
	Emitter Notes: 05PC emitters (2 assigned to each 5 GAL plant)	504	
SYMBOL	MANUFACTURER/MODEL/DESCRIPTION	QTY	DETAIL
	ISOLATION VALVE (MAIN LINE SIZE) BRASS INLINE CURB STOP GATE VALVE	7	4/L2.02
MV	BUCKNER-SUPERIOR 3300-RW 1-1/2" NORMALLY OPEN BRASS MASTER VALVE THAT PROVIDES DIRTY WATER PROTECTION AND NO MINIMUM FLOW FEATURE. AVAILABLE IN 1-1/2IN., 2IN., 2-1/2IN. AND 3IN.. WITH PURPLE CROSS HANDLE FOR RECLAIMED WATER USE.	1	2/L2.02
D	MANUAL BLOW OUT MUELLER CURB STOP	3	6/L2.02
C1	RAIN BIRD ESPLXIVM 60 STATION, 2-WIRE CONTROLLER W/ SMART VALVE TECHNOLOGY. (1) ESPLXIVM 60-STATION, INDOOR/OUTDOOR, PLASTIC WALL-MOUNT CABINET. SYSTEM REQUIREMENTS: RAIN BIRD LXIVM-XXX INTEGRATED VALVE MODULES & 2-WIRE DEVICES. USE PAIGE ELECTRIC CABLE P7072D & RAIN BIRD WC20 DRY SPLICES ONLY. GROUND SYSTEM W/ (X) LXIVMSD SURGE DEVICE. INSTALL PER MANUFACTURERS RECOMMENDATIONS. SEE WALL MOUNT CONTROLLER DETAIL FOR MOUNTING HEIGHT ON WALL.	1	1/L2.02
FS	RAIN BIRD FS-100-B 1IN. FLOW SENSOR, BRASS MODEL. SUGGESTED OPERATING RANGE 2.0 GPM TO 40.0 GPM. SIZE FOR FLOW NOT ACCORDING TO PIPE SIZE. RAIN BIRD COMPATIBLE CONTROLLERS: ESP-LXIVM(P) | LXD | LXME2(P) | ME3, OR CONTROLLERS ACCEPTING CUSTOM K-FACTOR AND OFFSET.	1	2/L2.02
PR	ZURN PRESSURE REGULATOR BRASS 500 XL WITH BUILT IN UNION	1	9/L2.02
POC	POINT OF CONNECTION SEE CIVIL PLANS	1	
	IRRIGATION LATERAL LINE: PVC SCHEDULE 40-NP SHRUBS (1" DIA. MIN.)	1,949 L.F.	
	IRRIGATION LATERAL LINE: PVC SCHEDULE 40-NP TREES (1" DIA. MIN.)	2,195 L.F.	
	IRRIGATION MAINLINE: PVC SCHEDULE 40-NP 1 1/2" DIA., TYP.	1,047 L.F.	
	PIPE SLEEVE: PVC SCHEDULE 40 SLEEVE	340.6 L.F.	

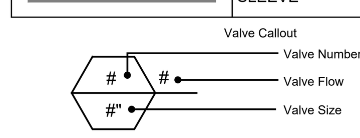

PLANT SCHEDULE

TREES	BOTANICAL / COMMON NAME	CONT	SIZE HXW	QTY	DETAIL
	ACER RUBRUM `REDPOINTE' REDPOINTE MAPLE	2.5" CAL	40`HX30`W	15	4/L1.02
	JUNIPERUS SCOPULORUM ROCKY MOUNTAIN JUNIPER	6` HT.	30`HX20`W	25	5/L1.02
	PINUS PONDEROSA PONDEROSA PINE	2.5" CAL	40`H X 40` H	15	5/L1.02
	PYRUS CALLERYANA 'REDSPIRE' REDSPIRE CALLERY PEAR	2.5" CAL	40`HX30`W	17	4/L1.02
SHRUBS	BOTANICAL / COMMON NAME	CONT	SIZE HXW	QTY	DETAIL
	BERBERIS THUNBERGII `CRIMSON PYGMY` CRIMSON PYGMY JAPANESE BARBERRY	5 GAL	2`H X 3`W	58	3/L1.02
	CALAMAGROSTIS X ACUTIFLORA 'KARL FOERSTER' KARL FOERSTER FEATHER REED GRASS	5 GAL	5`HX2.5`W	43	3/L1.02
	CARAGANA ARBORESCENS SIBERIAN PEASHRUB	5 GAL	8`HX8`W	15	3/L1.02
	HESPERALOE PARVIFLORA RED YUCCA	5 GAL	4`HX4`W	79	3/L1.02
	RHUS AROMATICA 'GRO-LOW' GRO-LOW FRAGRANT SUMAC	5 GAL	4`HX6`W	57	3/L1.02

REFERENCE NOTES SCHEDULE

	DECORATIVE BOULDERS		
SYMBOL	DESCRIPTION	QTY	DETAIL
	DECORATIVE BOULDER SIZE: SMALL: 1' - 2` COLOR: GRAY/BROWN	11	1/L1.02
	DECORATIVE BOULDER SIZE: MEDIUM: 2` - 3` COLOR: GRAY/BROWN	19	1/L1.02
	DECORATIVE BOULDER SIZE: LARGE: 4' - 5' COLOR: GRAY/BROWN	26	1/L1.02
SYMBOL	DESCRIPTION	QTY	DETAIL
	6" RIP RAP @ 6" MIN. DEPTH / COLOR TO MATCH PATHWAY PEBBLE	6,604 SF	
	LANDSCAPE		
SYMBOL	DESCRIPTION	QTY	DETAIL
	3/4" PATHWAY PEBBLE @ 4" DEPTH SUPPLIED BY: RT DONOVAN CO. INC. 11600 PYRAMID WAY SPARKS, NV 89441	28,092 SF	2/L1.02

Avoid cutting underground utility lines. It's costly. Call 811 Know what's below. Call before you dig. 1-800-642-2444

AVOID OVERHEAD POWER LINE CONTACT. IT'S COSTLY. Call before you Overhead 1-702-227-2929 NEVADA POWER ENVIRONMENT AND SAFETY SERVICES DEPARTMENT

tsk
225 South Arlington Avenue, Suite A
Reno NV, 89501
phone: 775.857.2949
fax: 775.857.2403
www.tska.com

THESE DRAWINGS AND SPECIFICATIONS ARE THE PROPERTY OF TATE SNYDER KIMSEY ARCHITECTS AND MAY NOT BE REPRODUCED OR USED FOR ANY PURPOSE WITHOUT THE ARCHITECTS WRITTEN CONSENT. AS INSTRUMENTS OF SERVICE, THESE DOCUMENTS ARE NOT FINAL AND READY FOR USE, AND THEREFORE NOT VALID, UNLESS THEY ARE SEALED, SIGNED AND DATED.

Copyright, Ltd 2022

Consultant

LAGE design
LANDSCAPE ARCHITECTURE PLANNING
LAGE DESIGN, INC.
314 S. WATER ST. STE 120
HENDERSON NV, 89015
WWW.LAGEDESIGNINC.COM
(702) 479-5225

PLEASE RECYCLE

Project
SPARKS Fire Station #6

WINGFIELD HILLS ROAD, SPARKS NEVADA 89436

Job No: 22-043

Owner
CITY OF SPARKS

CITY OF SPARKS FIRE DEPARTMENT Est. 1905

REGISTERED LANDSCAPE ARCHITECT SHANE ICE 1035 Expires: 06/30/24 STATE OF NEVADA
01/04/2024

BID SET

REVISIONS		
REV	DATE	DESCRIPTION

Sheet Title
LANDSCAPE NOTES & OVERALL SCHEDULES

Date: JANUARY 4, 2024
Sheet No:
L0.01

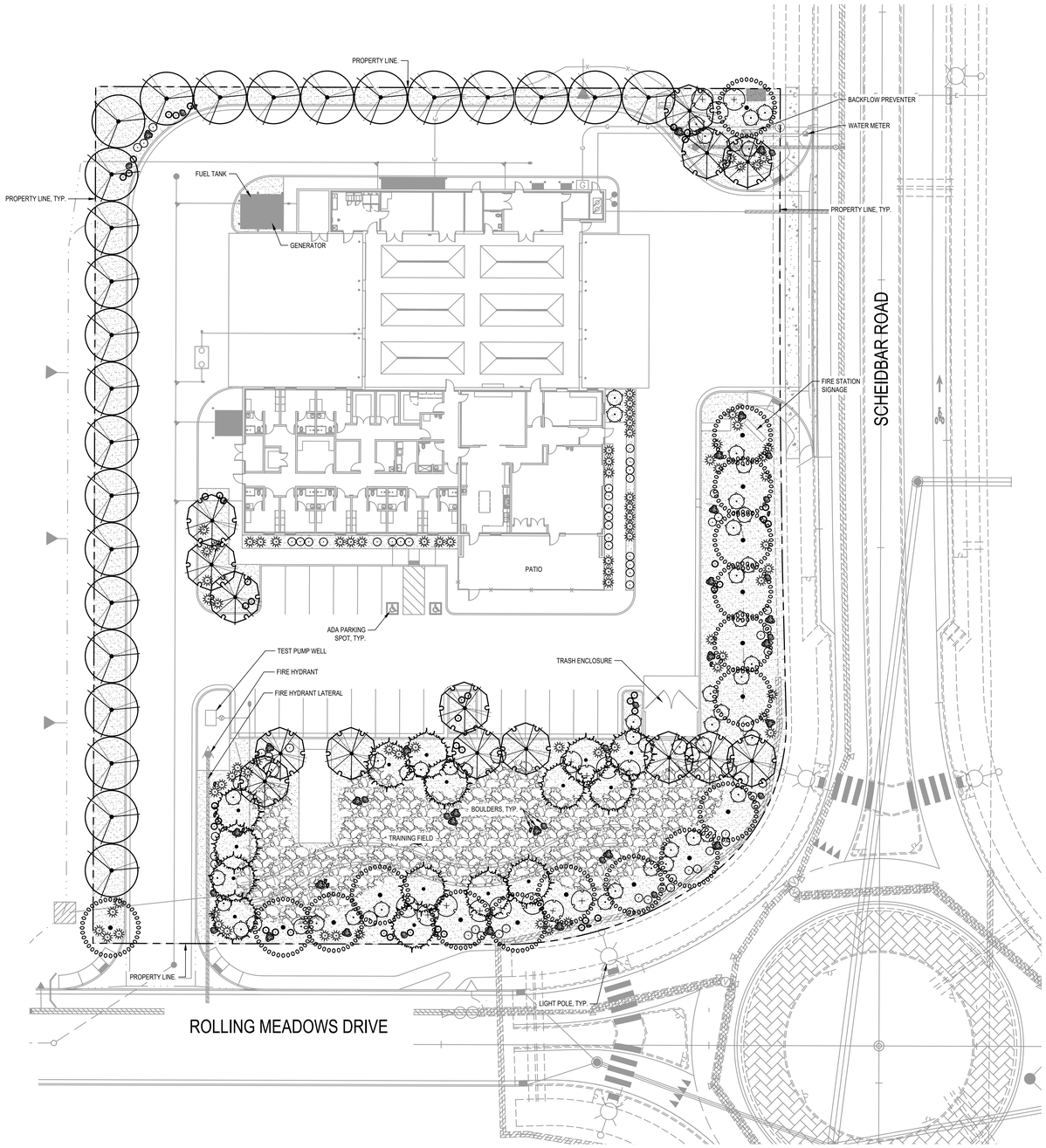

PLANT SCHEDULE

TREES	BOTANICAL / COMMON NAME	CONT	SIZE HXW	DETAIL
	ACER RUBRUM 'REDPOINTE' REDPOINTE MAPLE	2.5" CAL	40'HX30'W	4/L1.02
	JUNIPERUS SCOPULORUM ROCKY MOUNTAIN JUNIPER	6' HT.	30'HX20'W	5/L1.02
	PINUS PONDEROSA PONDEROSA PINE	2.5" CAL	40'H X 40' H	5/L1.02
	PYRUS CALLERYANA 'REDSPIRE' REDSPIRE CALLERY PEAR	2.5" CAL	40'HX30'W	4/L1.02
SHRUBS	BOTANICAL / COMMON NAME	CONT	SIZE HXW	DETAIL
	BERBERIS THUNBERGII 'CRIMSON PYGMY' CRIMSON PYGMY JAPANESE BARBERRY	5 GAL	2'H X 3'W	3/L1.02
	CALAMAGROSTIS X ACUTIFLORA 'KARL FOERSTER' KARL FOERSTER FEATHER REED GRASS	5 GAL	5'HX2.5'W	3/L1.02
	CARAGANA ARBORESCENS SIBERIAN PEASHRUB	5 GAL	8'HX8'W	3/L1.02
	HESPERALOE PARVIFLORA RED YUCCA	5 GAL	4'HX4'W	3/L1.02
	RHUS AROMATICA 'GRO-LOW' GRO-LOW FRAGRANT SUMAC	5 GAL	4'HX6'W	3/L1.02

REFERENCE NOTES SCHEDULE

	DECORATIVE BOULDERS	
SYMBOL	DESCRIPTION	DETAIL
	DECORATIVE BOULDER SIZE: SMALL: 1' - 2' COLOR: GRAY/BROWN	1/L1.02
	DECORATIVE BOULDER SIZE: MEDIUM: 2' - 3' COLOR: GRAY/BROWN	1/L1.02
	DECORATIVE BOULDER SIZE: LARGE: 4' - 5' COLOR: GRAY/BROWN	1/L1.02
SYMBOL	DESCRIPTION	DETAIL
	6" RIP RAP @ 6" MIN. DEPTH / COLOR TO MATCH PATHWAY PEBBLE	
	LANDSCAPE	
SYMBOL		DETAIL
	3/4" PATHWAY PEBBLE @ 4" DEPTH SUPPLIED BY: RT DONOVAN CO. INC. 11600 PYRAMID WAY SPARKS, NV 89441	2/L1.02

tsk

225 South Arlington Avenue,
Suite A
Reno NV, 89501
phone: 775.857.2949
fax: 775.857.2403
www.tska.com

THESE DRAWINGS AND SPECIFICATIONS ARE THE PROPERTY OF TATE SNYDER KIMSEY ARCHITECTS AND MAY NOT BE REPRODUCED OR USED FOR ANY PURPOSE WITHOUT THE ARCHITECTS WRITTEN CONSENT. AS INSTRUMENTS OF SERVICE, THESE DOCUMENTS ARE NOT FINAL AND READY FOR USE, AND THEREFORE NOT VALID, UNLESS THEY ARE SEALED, SIGNED AND DATED.

Copyright, Ltd 2022

Consultant

LAGE design
LANDSCAPE ARCHITECTURE PLANNING
LAGE DESIGN, INC.
314 S. WATER ST. STE 120
HENDERSON NV, 89015
WWW.LAGEDESIGNINC.COM
(702) 479-5225

PLEASE RECYCLE

Project

SPARKS Fire Station #6

WINGFIELD HILLS ROAD, SPARKS NEVADA 89436

Job No: 22-043

Owner

CITY OF SPARKS

REGISTERED LANDSCAPE ARCHITECT
SHANE ICE
1035
Expires: 06/30/24
STATE OF NEVADA
01/04/2024

BID SET

REVISIONS		
REV	DATE	DESCRIPTION

Sheet Title

PLANTING PLAN

Date: JANUARY 4, 2024

Sheet No:

L1.01

LEGEND:

1. BOULDER.
2. FINISH GRADE.
3. BOULDERS SHOWN IN A GROUP ARE TO BE PLACED TOUCHING EACH OTHER IN A NATURAL CONFIGURATION PER DIRECTION OF LANDSCAPE ARCHITECT OR OWNER'S REPRESENTATIVE.

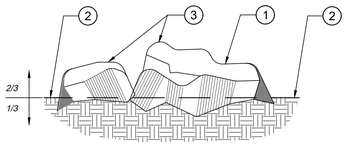

NOTES:

1. PLACE ALL BOULDERS SUCH THAT $\frac{1}{3}$ OF THE TOTAL MASS OF EACH BOULDER IS BELOW FINISH GRADE.
2. PROTECT BOULDERS FROM SCRAPES AND SCRATCHES.

1 BOULDER PLACEMENT

NTS — O–PL–HEN–01

LEGEND:

1. FINISH GRADE, TYP.
2. GROUND COVER MULCH: DECORATIVE ROCK MULCH (OR) RIP RAP.
3. FINISHED SUBGRADE, TOP OF NATIVE SOIL.
4. NATIVE SOILS: HAND RAKE ALL LANDSCAPE PLANTER AREAS REMOVING SPOILS 1-1/2" DIAMETER IN SIZE OR GREATER AND DISPOSE OF ALL SPOILS LEGALLY OFF-SITE. APPLY A GRANULAR PRE-EMERGENT APPLICATION TO ALL LANDSCAPE PLANTER AREAS PRIOR TO FABRIC INSTALLATION.
5. BURY ALL DRIP DISTRIBUTION TUBING IN DG OR BARK MULCH AREAS.
6. FINISH GRADE ,TYP. TOP OF ROCK MULCH.
7. GROUND COVER MULCH: ROCK MULCH PER LEGEND.
8. LANDSCAPE FABRIC: 2 OUNCE TO 3 OUNCE NON-WOVEN LANDSCAPE FABRIC. GREY IN COLOR (OAE). DO NOT INSTALL WOVEN LANDSCAPE FABRIC. OVERLAP ALL EDGES SIX INCH (6") MINIMUM OVERLAP AND STAPLE EVERY SIX FOOT (6') ON CENTER. HANES GEO OR DEWITT (OAE).
9. LANDSCAPE STAPLES: INSTALL LANDSCAPE STAPLES EVERY SIX FOOT (6') ON CENTER.

GROUND COVER MULCH: ROCK MULCH WITH LANDSCAPE FABRIC

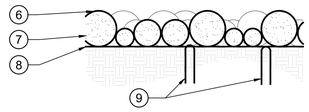

NOTES:

1. INSTALL FULL LAYER OF ROCK MULCH SO THAT NO LANDSCAPE FABRIC IS VISIBLE. CONTRACTOR TO INSTALL ROCK MULCH PER LEGEND AND WILL NEED TO IMPORT A SMALLER SIZED ROCK (TO MATCH SPECIFIED ROCK) TO SPREAD OVER THE TOP OF ANY LARGE ROCK MULCH IF ANY LANDSCAPE IS STILL VISIBLE AFTER INSTALLATION OF LARGER ROCK MULCH.
2. DO NOT BURY DRIP DISTRIBUTION TUBING UNDER ANY GROUND COVER MULCH THAT HAS LANDSCAPE FABRIC BENEATH IT. REFER TO DRIP DISTRIBUTION TUBING STANDARD DETAIL.

GROUND COVER MULCH: DECOMPOSED GRANITE OR BARK MULCH

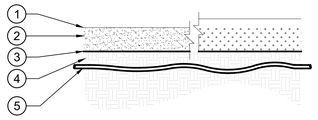

NOTES:

1. BURY DRIP DISTRIBUTION TUBING UNDER ANY DG OR BARK GROUND COVER MULCH THAT DOES NOT HAVE LANDSCAPE FABRIC BENEATH IT. REFER TO DRIP DISTRIBUTION TUBING STANDARD DETAIL.

2 GROUNDCOVER MULCH INSTALLATION

NTS — P-CO-SFS-28

LEGEND:

1. SHRUB OR PERENNIAL PER PLANTING LEGEND (TYPICAL).
2. WALK-ON BARK MULCH IN PLANT WATERING BASIN (4" MIN DEPTH).
3. GROUND COVER MULCH PER LEGEND (4" MIN LAYER).
4. AMENDED SOIL BACKFILL MATERIAL TO BE 1/3 ORGANIC HUMUS (NITROGEN FORTIFIED ORGANICS) MIXED WITH 2/3 NATIVE SOIL AND BLENDED TOGETHER PRIOR TO BACKFILLING. ADD WATER AND BACKFILL IN 6" LIFTS.
5. FERTILIZER: BEST SLOW RELEASE 15-15-15 ALL PURPOSE FERTILIZER. INSTALL PER MANUFACTURER'S RECOMMENDED APPLICATION RATES FOR PLANTINGS.
6. REMOVE 1/2 TO 3/4 BURLAP ON THE B&B MATERIAL. REMOVE THE BOTTOM HALF OF THE WIRE PRIOR TO PLACING ROOTBALL IN PLANTING PIT THEN COMPLETELY REMOVE THE REMAINING WIRE BASKET AFTER ROOTBALL IS PLACED IN PLANTING PIT.
7. INSTALL TOP OF ROOTBALL ONE INCH (1") ABOVE THE TOP OF THE SUB-GRADE SOILS.
8. FINISH GRADE (TYPICAL).
9. TOP OF SUB-GRADE SOILS PRIOR TO GROUND COVER MULCH INSTALLATION (1" MIN DEPTH BELOW TOP OF ROOTBALL).
10. UNDISTURBED NATIVE SOILS (TYP.).

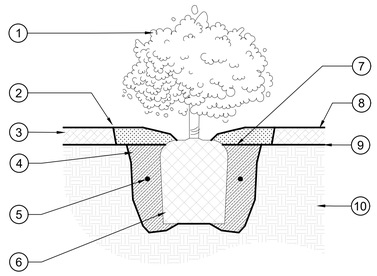

NOTES:

1. REMOVE ALL NURSERY STAKES, TIES & TAGS. SHRUBS MUST STAND UPRIGHT TO BE ACCEPTABLE. SEE NURSERY STOCK QUALITY STANDARDS.
2. REMOVE DAMAGED BRANCHES. DO NOT REMOVE CENTRAL LEADER OR ANY LOWER BRANCHES.
3. TOP OF ROOT BALL* TO BE 1" ABOVE EXISTING GRADE. NO NATIVE SOIL TO BE PLACED ON TOP OF ROOT BALL.
4. GRADE WATERING BASIN SUCH THAT WATER COLLECTS AT EDGE OF ROOT BALL, NOT AT TRUNK.
5. THOROUGHLY WATER IMMEDIATELY AFTER PLANTING.
6. DO NOT AUGER HOLES. CONTRACTOR TO EXCAVATE HOLES EITHER MECHANICALLY OR BY HAND AND MUST ENSURE THAT THE EXCAVATED HOLE IS TWO TIMES (2x) THE SIZE OF THE ROOT BALL.

* TOP OF ROOT BALL IS DEFINED AS THE LOCATION OF THE UPPERMOST LATERAL ROOT NOT THE SOIL LEVEL IN THE PLANT CONTAINER.

3 SHRUB INSTALLATION

NTS — P-CO-SFS-29

LEGEND:

1. DECIDUOUS TREE PER PLANTING LEGEND (TYPICAL).
2. TREE STAKES: TWO (2) LODGE POLE TREE STAKES, TWO INCH (2") DIAMETER BY EIGHT FEET (8') IN LENGTH. STAKE INTO UNDISTURBED SOIL OUTSIDE THE ROOT BALL AND PERPENDICULAR TO PREVAILING WINDS.
3. TYING WIRE: WHITE 14 GAUGE IRRIGATION WIRE. WRAP AROUND STAKE AND TIE TO SECURE THE TYING WIRE TO THE STAKE.
4. RUBBER HOSE (1/2" OR 3/4" IN SIZE) WITH FOURTEEN (14) GAUGE TYING WIRE INSIDE. LEAVE TWO INCHES (2") OF CLEARANCE BETWEEN THE TREE TRUNK AND RUBBER HOSE ON ALL SIDES. STAKE TO IMMOBILIZE ROOT BALL NOT TO STRAIGHTEN THE TREE.
5. INSTALL TIES OVER TREE BRANCHES SO THEY DO NOT SLIP DOWN THE TREE TRUNK OVER TIME.
6. INSTALL TOP OF ROOT BALL ONE INCH (1") ABOVE THE TOP OF THE SUB-GRADE SOILS (SEE DETAIL ENLARGEMENT).
7. REMOVE 1/2 TO 3/4 BURLAP ON THE B&B MATERIAL. REMOVE THE BOTTOM HALF OF THE WIRE PRIOR TO PLACING ROOTBALL IN PLANTING PIT THEN COMPLETELY REMOVE THE REMAINING WIRE BASKET AFTER ROOTBALL IS PLACED IN PLANTING PIT.
8. UNDISTURBED NATIVE SOILS (TYP.).
9. PATHWAY PEBBLES IN PLANT WATERING BASIN (4" MIN DEPTH).
10. GROUND COVER MULCH PER PLANTING PLAN (4" MIN LAYER).
11. TOP OF SUB-GRADE SOILS PRIOR TO GROUND COVER MULCH INSTALLATION (1" MIN DEPTH BELOW TOP OF ROOT BALL).
12. AMENDED SOIL BACKFILL MATERIAL TO BE 1/3 ORGANIC HUMUS (NITROGEN FORTIFIED ORGANICS) MIXED WITH 2/3 NATIVE SOIL AND BLENDED TOGETHER PRIOR TO BACKFILLING. ADD WATER AND BACKFILL IN 6" LIFTS.
13. FERTILIZER: BEST SLOW RELEASE 15-15-15 ALL PURPOSE FERTILIZER. INSTALL PER MANUFACTURER'S RECOMMENDED APPLICATION RATES FOR PLANTINGS.

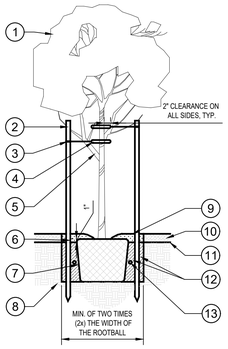

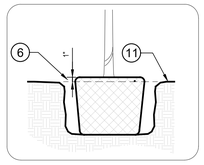

NOTES:

1. REMOVE ALL NURSERY STAKES, TIES & TAGS. TREES MUST STAND UPRIGHT TO BE ACCEPTABLE. SEE NURSERY STOCK QUALITY STANDARDS.
2. REMOVE DAMAGED BRANCHES. DO NOT REMOVE CENTRAL LEADER OR ANY LOWER BRANCHES.
3. TOP OF ROOT BALL* TO BE 1" ABOVE EXISTING GRADE. NO NATIVE SOIL TO BE PLACED ON TOP OF ROOT BALL.
4. GRADE WATERING BASIN SUCH THAT WATER COLLECTS AT EDGE OF ROOT BALL, NOT AT TRUNK.
5. THOROUGHLY WATER IMMEDIATELY AFTER PLANTING.
6. ORIENT GRAFT UNION TO FACE NORTH.

* TOP OF ROOT BALL IS DEFINED AS THE LOCATION OF THE UPPERMOST LATERAL ROOT NOT THE SOIL LEVEL IN THE PLANT CONTAINER.

4 DECIDUOUS TREE INSTALLATION

NTS — P-CO-SFS-30

LEGEND:

1. EVERGREEN TREE PER PLANTING LEGEND (TYPICAL).
2. TREE STAKES: TWO (2) LODGE POLE TREE STAKES, TWO INCH (2") DIAMETER BY EIGHT FEET (8') IN LENGTH. STAKE INTO UNDISTURBED SOIL OUTSIDE THE ROOTBALL AND PERPENDICULAR TO PREVAILING WINDS.
3. TYING WIRE: WHITE 14 GAUGE IRRIGATION WIRE. WRAP AROUND STAKE AND TIE TO SECURE THE TYING WIRE TO THE STAKE.
4. RUBBER HOSE (1/2" OR 3/4" IN SIZE) WITH FOURTEEN (14) GAUGE TYING WIRE INSIDE. LEAVE TWO INCHES (2") OF CLEARANCE BETWEEN THE TREE TRUNK AND RUBBER HOSE ON ALL SIDES. STAKE TO IMMOBILIZE ROOTBALL NOT TO STRAIGHTEN THE TREE.
5. INSTALL TIES OVER TREE BRANCHES SO THEY DO NOT SLIP DOWN THE TREE TRUNK OVER TIME.
6. INSTALL TOP OF ROOT BALL ONE INCH (1") ABOVE THE TOP OF THE SUB-GRADE SOILS (SEE DETAIL ENLARGEMENT ABOVE).
7. REMOVE 1/2 TO 3/4 BURLAP ON THE B&B MATERIAL. REMOVE THE BOTTOM HALF OF THE WIRE PRIOR TO PLACING ROOT BALL IN PLANTING PIT THEN COMPLETELY REMOVE THE REMAINING WIRE BASKET AFTER ROOT BALL IS PLACED IN PLANTING PIT.
8. UNDISTURBED NATIVE SOILS (TYP.).
9. PATHWAY PEBBLES IN PLANT WATERING BASIN (4" MIN DEPTH).
10. GROUND COVER MULCH PER PLANTING PLAN (4" MIN LAYER).
11. TOP OF SUB-GRADE SOILS PRIOR TO GROUND COVER MULCH INSTALLATION (1" MIN DEPTH BELOW TOP OF ROOT BALL).
12. AMENDED SOIL BACKFILL MATERIAL TO BE 1/3 ORGANIC HUMUS (NITROGEN FORTIFIED ORGANICS) MIXED WITH 2/3 NATIVE SOIL AND BLENDED TOGETHER PRIOR TO BACKFILLING. ADD WATER AND BACKFILL IN 6" LIFTS.
13. FERTILIZER: BEST SLOW RELEASE 15-15-15 ALL PURPOSE FERTILIZER. INSTALL PER MANUFACTURER'S RECOMMENDED APPLICATION RATES FOR PLANTINGS.

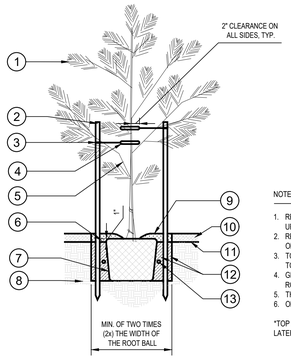

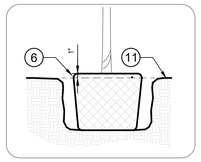

NOTES:

1. REMOVE ALL NURSERY STAKES, TIES & TAGS. TREES MUST STAND UPRIGHT TO BE ACCEPTABLE. SEE NURSERY STOCK QUALITY STANDARDS.
2. REMOVE DAMAGED BRANCHES. DO NOT REMOVE CENTRAL LEADER OR ANY LOWER BRANCHES.
3. TOP OF ROOT BALL* TO BE 1" ABOVE EXISTING GRADE. NO NATIVE SOIL TO BE PLACED ON TOP OF ROOT BALL.
4. GRADE WATERING BASIN SUCH THAT WATER COLLECTS AT EDGE OF ROOT BALL, NOT AT TRUNK.
5. THOROUGHLY WATER IMMEDIATELY AFTER PLANTING.
6. ORIENT GRAFT UNION TO FACE NORTH.

*TOP OF ROOT BALL IS DEFINED AS THE LOCATION OF THE UPPERMOST LATERAL ROOT NOT THE SOIL LEVEL IN THE PLANT CONTAINER.

5 EVERGREEN TREE INSTALLATION

NTS — P-CO-SFS-31

tsk

225 South Arlington Avenue,
Suite A
Reno NV, 89501
phone: 775.857.2949
fax: 775.857.2403
www.tska.com

THESE DRAWINGS AND SPECIFICATIONS ARE THE PROPERTY OF TATE SNYDER KIMSEY ARCHITECTS AND MAY NOT BE REPRODUCED OR USED FOR ANY PURPOSE WITHOUT THE ARCHITECTS WRITTEN CONSENT. AS INSTRUMENTS OF SERVICE, THESE DOCUMENTS ARE NOT FINAL AND READY FOR USE, AND THEREFORE NOT VALID, UNLESS THEY ARE SEALED, SIGNED AND DATED.

Copyright, Ltd 2022

Consultant

LAGE design
LANDSCAPE ARCHITECTURE PLANNING
LAGE DESIGN, INC.
314 S. WATER ST. STE 120
HENDERSON NV, 89015
WWW.LAGEDESIGNINC.COM
(702) 479-5225

PLEASE RECYCLE

Project

SPARKS Fire Station #6

WINGFIELD HILLS ROAD, SPARKS NEVADA 89436

Job No: 22-043

Owner

CITY OF SPARKS

REGISTERED LANDSCAPE ARCHITECT
SHANE ICE
1035
Expires: 06/30/24
STATE OF NEVADA
01/04/2024

BID SET

REVISIONS

REV	DATE	DESCRIPTION

Sheet Title

PLANTING DETAILS

Date: JANUARY 4, 2024

Sheet No:

L1.02

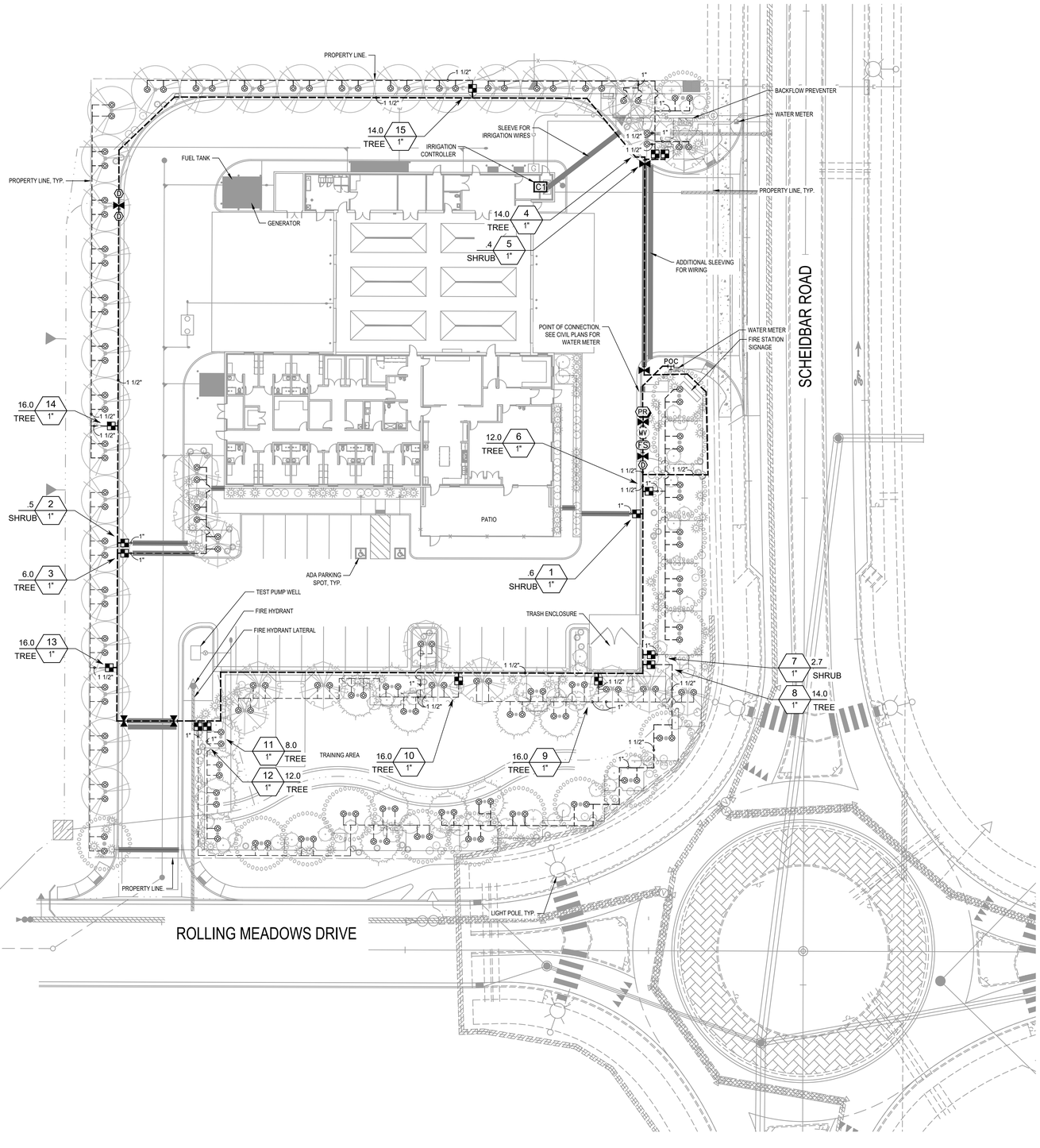

IRRIGATION SCHEDULE

SYMBOL	MANUFACTURER/MODEL/DESCRIPTION
1401 1402 1404 1408	RAIN BIRD RWS-B-C-P W/ RWS-SOCK 1400 SERIES ROOT WATERING SYSTEM WITH 4IN. DIAMETER X 36IN. LONG WITH LOCKING GRATE, SEMI-RIGID MESH TUBE. CHECK VALVE, PURPLE GRATE, AND SAND SOCK. RAIN BIRD BUBBLER OPTION AS INDICATED: 1401 0.25 GPM, 1402 0.5 GPM, 1404 1.0 GPM, 1408 2.0 GPM.
SYMBOL	MANUFACTURER/MODEL/DESCRIPTION
	RAIN BIRD XCZ-100-IVMQ WIDE FLOW IVM DRIP CONTROL KIT FOR COMMERCIAL APPLICATIONS. 1IN. BALL VALVE WITH 1IN. PESBIVM SMART VALVE W/ FACTORY INSTALLED IVM-SOL 0.3-20 GPM AND 1IN. PRESSURE REGULATING 40PSI QUICK-CHECK BASKET FILTER 0.3-20 GPM
AREA NOT SHOWN	AREA TO RECEIVE DRIP EMITTERS RAIN BIRD XB-PC-1032 SINGLE OUTLET, PRESSURE COMPENSATING DRIP EMITTERS. FLOW RATES OF 0.5 GPH=BLUE, 1.0 GPH=BLACK, AND 2.0 GPH=RED. COMES WITH A 10-32 THREADED INLET X BARB OUTLET.
	Emitter Notes: 05PC emitters (2 assigned to each 5 GAL plant)
SYMBOL	MANUFACTURER/MODEL/DESCRIPTION
	ISOLATION VALVE (MAIN LINE SIZE) BRASS INLINE CURB STOP GATE VALVE
MV	BUCKNER-SUPERIOR 3300-RW 1-1/2" NORMALLY OPEN BRASS MASTER VALVE THAT PROVIDES DIRTY WATER PROTECTION AND NO MINIMUM FLOW FEATURE. AVAILABLE IN 1-1/2IN., 2IN., 2-1/2IN. AND 3IN. WITH PURPLE CROSS HANDLE FOR RECLAIMED WATER USE.
D	MANUAL BLOW OUT MUELLER CURB STOP
C1	RAIN BIRD ESPLXIVM 60 STATION, 2-WIRE CONTROLLER W/ SMART VALVE TECHNOLOGY. (1) ESPLXIVM 60-STATION, INDOOR/OUTDOOR, PLASTIC WALL-MOUNT CABINET. SYSTEM REQUIREMENTS: RAIN BIRD LXIVM-XXX INTEGRATED VALVE MODULES & 2-WIRE DEVICES. USE PAIGE ELECTRIC CABLE P7072D & RAIN BIRD WC20 DRY SPLICES ONLY. GROUND SYSTEM W/ (X) LXIVMSD SURGE DEVICE. INSTALL PER MANUFACTURERS RECOMMENDATIONS. SEE WALL MOUNT CONTROLLER DETAIL FOR MOUNTING HEIGHT ON WALL.
FS	RAIN BIRD FS-100-B 1IN. FLOW SENSOR. BRASS MODEL. SUGGESTED OPERATING RANGE 2.0 GPM TO 40.0 GPM. SIZE FOR FLOW NOT ACCORDING TO PIPE SIZE. RAIN BIRD COMPATIBLE CONTROLLERS: ESP-LXIVM(P) | LXD | LXME2(P) | ME3, OR CONTROLLERS ACCEPTING CUSTOM K-FACTOR AND OFFSET.
PRV	ZURN PRESSURE REGULATOR BRASS 500 XL WITH BUILT IN UNION
POC "#"	POINT OF CONNECTION SEE CIVIL PLANS
	IRRIGATION LATERAL LINE: PVC SCHEDULE 40-NP SHRUBS (1" DIA. MIN.)
	IRRIGATION LATERAL LINE: PVC SCHEDULE 40-NP TREES (1" DIA. MIN.)
	IRRIGATION MAINLINE: PVC SCHEDULE 40-NP 1 1/2" DIA., TYP.
	PIPE SLEEVE: PVC SCHEDULE 40 SLEEVE

Valve Callout
- Valve Number
- Valve Flow
- Valve Size

NOTES:
1. IRRIGATION SYSTEM TO BE COMMISSIONED BY A RAIN BIRD AUTHORIZED SERVICE PROVIDER (A.S.P.).
2. IRRIGATION SYSTEM OPERATING PRESSURE DESIGNED AT 40 PSI, WITH A MAXIMUM FLOW OF 20 GPM.
3. SURGE PROTECTION TO BE PROVIDED EVERY 500' OR 15 IVM MODULES (SEE 4/L2.03).
4. RAIN BIRD OPERATION INDICATORS WILL BE SITED BY OWNER'S REPRESENTATIVE.
5. ALL MAINLINE PIPE AND LATERAL LINE PIPE FITTINGS SHALL BE SCH. 80 PVC, TYPICAL.

tsk
225 South Arlington Avenue,
Suite A
Reno NV, 89501
phone: 775.857.2949
fax: 775.857.2403
www.tska.com

THESE DRAWINGS AND SPECIFICATIONS ARE THE PROPERTY OF TATE SNYDER KIMSEY ARCHITECTS AND MAY NOT BE REPRODUCED OR USED FOR ANY PURPOSE WITHOUT THE ARCHITECTS WRITTEN CONSENT. AS INSTRUMENTS OF SERVICE, THESE DOCUMENTS ARE NOT FINAL AND READY FOR USE, AND THEREFORE NOT VALID, UNLESS THEY ARE SEALED, SIGNED AND DATED.

Copyright, Ltd 2022

Consultant

LAGE design
LANDSCAPE ARCHITECTURE PLANNING
LAGE DESIGN, INC.
314 S. WATER ST. STE 120
HENDERSON NV, 89015
WWW.LAGEDESIGNINC.COM
(702) 479-5225

PLEASE RECYCLE

Project
SPARKS Fire Station #6

WINGFIELD HILLS ROAD, SPARKS NEVADA 89436

Job No: 22-043

Owner
CITY OF SPARKS

REGISTERED LANDSCAPE ARCHITECT
SHANE ICE
1035
Expires: 06/30/24
STATE OF NEVADA
01/04/2024

BID SET

REVISIONS		
REV	DATE	DESCRIPTION

Sheet Title
IRRIGATION PLAN

Date: JANUARY 4, 2024
Sheet No:

L2.01

LEGEND:

1. WALL MOUNT IRRIGATION CONTROLLER PER LEGEND.
2. ELECTRICAL CONDUIT AND CONDUIT SWEEP FOR IRRIGATION CONTROL WIRES. SIZE TO BE DETERMINED FOR AMOUNT OF CONTROL WIRES.
3. ELECTRICAL CONDUIT (1" IN SIZE) AND CONDUIT SWEEP FOR CONTROLLER GROUNDING. SEE CONTROLLER GROUNDING DETAIL.
4. ELECTRICAL JUNCTION BOX (HARD WIRED TO POWER SOURCE) COORDINATE WITH ELECTRICAL CONTRACTOR.
5. ELECTRICAL CONDUIT (1" IN SIZE) FOR ELECTRICAL CONNECTION PER ELECTRICAL CONTRACTOR.
6. DIRECT BURIAL IRRIGATION CONTROL WIRE PER LEGEND.
7. FINISH GRADE.

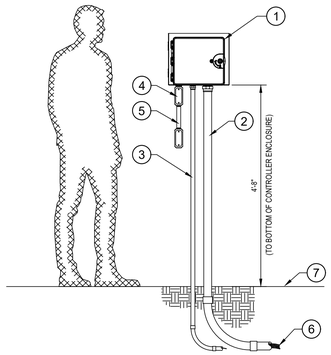

NOTES:

1. STATIONS, INSTALL A SPLICE BOX AT THE BASE OF THE CONTROLLER AND TRANSITION THE IRRIGATION CONTROL WIRES INTO A MULTI-STRAND WIRE INTO THE CONTROLLER.
2. PROVIDE PROPER GROUNDING COMPONENTS TO ACHIEVE GROUND RESISTANCE OF 10 OHMS OR LESS. PROVIDE WRITTEN TEST RESULTS TO THE OWNER'S REP PRIOR TO COMPLETION OF CONSTRUCTION.

1 WALL MOUNT CONTROLLER

NTS P-CO-SFS-34

LEGEND:

1. PVC SCH 40 MAIN LINE (4" IN SIZE OR LESS).
2. SCH 80 MAIN LINE FITTING.
3. MAIN LINE BUSHED DOWN TO ONE SIZE BELOW THE MAIN LINE.
4. SCH 80 MALE ADAPTER.
5. MASTER VALVE PER LEGEND - 24V AC (NORMALLY OPEN). INSTALL PER MANUFACTURER'S RECOMMENDATION FOR PROPOSED IRRIGATION FLOWS.
6. SCH 80 MALE ADAPTER.
7. BUSHED DOWN MAIN LINE.
8. PVC SCH 80 TEE FLOW SENSOR PER LEGEND (4" IN SIZE OR LESS).
9. MAIN LINE BUSHED BACK UP TO SIZE AS SPECIFIED IN LEGEND.
10. SCH 80 MAIN LINE FITTING.
11. PVC SCH 40 MAIN LINE (SIZE PER LEGEND).
12. VALVE BOX: CARSON 1220 VALVE BOX WITH EXTENSIONS AS NEEDED TO MEET FINISH GRADE (POTABLE GREEN IN COLOR AND PURPLE FOR RECLAIMED SYSTEMS).
13. FINISH GRADE, TYP.

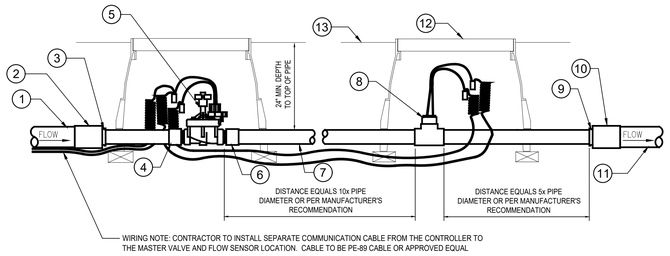

NOTES:

1. CONTRACTOR TO VERIFY IRRIGATION PLAN PROPOSED FLOWS WITH MANUFACTURER'S RECOMMENDED FLOW RANGE.
2. CONTRACTOR TO INSTALL PER MANUFACTURER'S RECOMMENDATION AND PROVIDE THE CITY WITH WRITTEN DOCUMENTATION THAT THE MASTER VALVE AND FLOW SENSOR HAS BEEN INSTALL PER MANUFACTURER'S RECOMMENDATIONS FOR AVAILABLE FLOW AND PRESSURE.
3. IF ANY DISCREPANCIES ARE FOUND WITH THE PROPOSED FLOW RANGE THE CONTRACTOR IS TO PROVIDE THE CITY WITH WRITTEN DOCUMENTATION 72 HOURS PRIOR TO ORDERING EQUIPMENT FOR FURTHER INQUIRY.
4. WIRING NOTE: CONTRACTOR TO INSTALL SEPARATE COMMUNICATION CABLE FROM THE CONTROLLER TO THE MASTER VALVE FLOW SENSOR LOCATION. CABLE TO BE PE-89 CABLE OR APPROVED EQUAL

2 MASTER VALVE AND FLOW SENSOR (4" MAIN LINE IN SIZE OR LESS)

NTS P-CO-SFS-39

LEGEND:

1. 3M DBR/Y CONNECTOR. INSTALL THE CONNECTOR FACING DOWN IN ALL APPLICATIONS. INSTALL DOWN TOWARDS THE GRAVEL BACKFILL.
2. DIRECT BURIAL IRRIGATION WIRE PER LEGEND. COIL WIRE WITH ENOUGH SLACK TO PULL THE WIRE SPLICE/CONNECTION TO A DISTANCE OF 3' ABOVE FINISH GRADE. INSTALL COIL WIRE IN VALVE BOX WHEN COMPLETE WITH WIRE SPLICE/CONNECTION OR WHEN NOT IN USE.
3. MAIN LINE PER LEGEND.

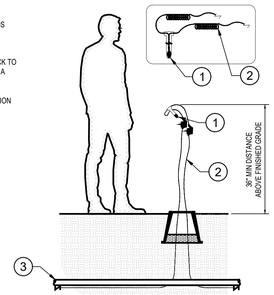

WIRING NOTES:

1. INSTALL WIRE CONNECTORS PER MANUFACTURER'S RECOMMENDATION.
2. INSTALL 14 GUAGE OR 12 GUAGE DIRECT BURIAL IRRIGATION WIRE. INSTALL WIRE PER MANUFACTURER'S RECOMMENDATION.

3 CONTROLLER WIRING SPLICE BOX

NTS P-CO-SFS-36

LEGEND

1. FINISHED SURFACE
2. CAST IRON VALVE BOX AND COVER EPOXY COATED PURPLE MARKED "RECLAIMED WATER" OR "EFFLUENT" PROVIDE MINIMUM 2" CLEAR TRAVEL BETWEEN BOX AND CONDUCTOR PIPE
3. CONCRETE COLLAR PER NOTE 3.
4. PROVIDE 1-1/4" DIAMETER EXTENSION ROD AND CENTERING COLLOR FOR VALVES WITH OPERATING NUT 4'-0" OR MORE BELOW FINISHED GRADE
5. WRAP VALVE WITH PURPLE POLYETHYLENE ENCASEMENT TO SERVE AS BOND BREAKER WITH CONCRETE
6. SIZE, STYLE, AND TYPE OF GATE VALVE PER PLANS AND SPECIFICATIONS
7. 6-INCH SDR-35 PVC CONDUCTOR PIPE, TO BE PLUMB AND CENTERED ON VALVE STEM
8. ALL EXPOSED METAL SURFACES MUST BE COATED WITH MASTIC, TYP.
9. PROVIDE THRUST RESTRAINT FOR 200 PSI WORKING PRESSURE, TYP. BOTH DIRECTIONS

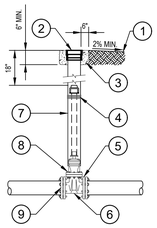

NOTES:

1. GATE VALVES 3-INCH TO 12-INCH. AWWA C509 OR C515, IRON BODY, FUSION BONDED EPOXY INTERIOR AND EXTERIOR COATING, BRONZE MOUNTED, NON-RISING STEM, SOLID WEDGED GATES, MINIMUM 200 PSIG WORKING PRESSURE, DOUBLE O-RING STEM SEALS, 2-INCH OPERATING NUT, COUNTERCLOCKWISE TO OPEN.
2. GATE VALVES, 2-INCH AND SMALLER. IRON BODY, NON-RISING STEM, SOLID WEDGED GATES, MINIMUM 200 PSIG WORKING PRESSURE, 2-INCH OPERATING NUT, COUNTERCLOCKWISE TO OPEN.
3. PORTLAND CEMENT CONCRETE (P.C.C.) FOR CONCRETE COLLAR SHALL HAVE THE FOLLOWING CHARACTERISTICS: 4,000 PSI MINIMUM COMPRESSIVE STRENGTH AT 28 DAYS, MINIMUM 6 SACKS OF CEMENT PER CUBIC YARD WITH A MAXIMUM WATER/CEMENT RATIO OF 0.45. AIR ENTRAINMENT 6% ±1.5%, SLUMP AT 1 TO 4 INCHES.MIX DESIGN SHALL CONFORM TO THE REQUIREMENTS OF SECTION 337 OF STANDARD SPECIFICATIONS OF PUBLIC WORKS CONSTRUCTION (SSPWC), AS ADOPTED BY CITY COUNCIL. CEMENT SHALL BE TYPE II. ALL CEMENT CONCRETE SHALL HAVE A COARSE AGGREGATE GRADATION CONFORMING TO SIZE NO. 67. POLYPROPYLENE OR CELLULOSE FIBERS SHALL BE ADDED TO THE P.C.C. AT 1.5 LBS. PER CUBIC YARD. ALL MATERIALS SHALL CONFORM TO SSPWC, AS ADOPTED BY CITY COUNCIL.

4 STD. DETAIL S-510 / RECLAIMED WATER GATE VALVE

1/4" = 1'-0" P-CO-SFS-38

LEGEND:

1. 5/8" X 10' GROUNDING ROD WITH INSULATED CONDUCTOR.
2. 6 AWG SOLID COPPER WIRE GREEN BONDING WIRE(S).
3. BARE SOLID 6 AWG SOLID COPPER WIRE.
4. SPHERE OF INFLUENCE.
5. 4" X 8' GROUNDING PLATE WITH 6 AWG INSULATED CONDUCTOR.
6. 6 AWG SOLID COPPER WIRE GREEN BONDING WIRE(S).

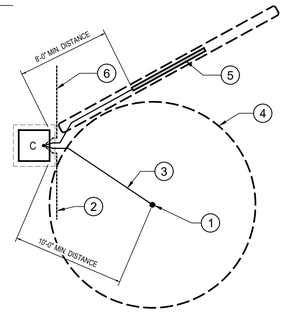

NOTES:

THE GROUND GRID COMPONENTS MUST BE INSTALLED WITH THE DIMENSIONAL RELATIONSHIP SHOWN IN THESE DETAILS. WIRES, CABLES, AND ELECTRONIC EQUIPMENT MUST BE INSTALLED OUTSIDE 'THE SPHERE OF INFLUENCE' OF THE GROUNDING ELECTRODES.

5 GROUNDING SPHERE OF INFLUENCE

NTS P-CO-SFS-35

LEGEND

1. 2" THREADED BRASS CAP
2. 2" BRASS STACK. LENGTH AS REQUIRED SO CAP IS MAXIMUM 4" BELOW FINISH GRADE
3. 2", 90 DEGREE THREADED BRASS ELBOW
4. 2" X 6" BRASS NIPPLE, TYP.
5. 2-INCH EPOXY COATED, IRON BODY, THREADED, NON-RISING STEM, SOLID WEDGE GATE VALVE, 2-INCH OPERATING NUT, 200 PSI WORKING PRESSURE
6. MJ CAP 2/ 2" TAP , RESTRAIN WITH MEGALUG RETAINER (SEE AND TYPE PER PLANS)
7. EXISTING RECLAIMED WATER MAIN. SIZE AND TYPE PER PLANS. RESTRAIN BELLS AS REQUIRED. SUBMIT REQUIRED RESTRAINED LENGTH TO CITY OF SPARKS PUBLIC WORKS

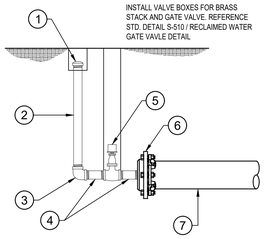

6 RECLAIMED WATER FLUSH ASSEMBLY

NTS P-CO-SFS-51

LEGEND:

1. SHRUB DRIP LATERAL LINE: PVC SCH 40 DRIP LATERAL LINE PIPING PER IRRIGATION PLAN. INSTALL PER LATERAL LINE TRENCHING STANDARD DETAIL.
2. SCH 40 DRIP LATERAL LINE FITTINGS, TYP.
3. TRANSITION FROM PVC TREE DRIP LATERAL LINE TO RAIN BIRD 17 MM XF BLANK TUBING.
4. DRIP DISTRIBUTION TUBING: RAIN BIRD 17MM XF BLANK TUBING.
5. DRIP FITTINGS: RAIN BIRD 17MM XF BARBED FITTINGS, TYP.
6. SHRUB DRIP EMITTER: RAIN BIRD XERI-BUG PRESSURE COMPENSATING EMITTER. INSTALL ALL DRIP EMITTERS ON THE HIGH SIDE OF THE SHRUB.
7. EMITTER DISTRIBUTION TUBING: 1/4" POLY DRIP TUBING. MAXIMUM LENGTH OF THE 1/4" POLY DRIP TUBING NOT TO EXCEED 36" IN LENGTH. ALL EMITTER DISTRIBUTION TUBING MUST END ON THE HIGH SIDE OF THE SHRUB (TYPICAL OF ALL SHRUBS).
8. EDGE OF SHRUB ROOT BALL, TYP.
9. END OF DRIP RUN: THREADED CAP FLUSHING END CAP (17MM BARB X 1/2" MPT MALE ADAPTER WITH SCH 40 THREADED CAP) PER SHRUB END OF DRIP RUN STANDARD DETAIL.
10. VALVE BOX: STANDARD CARSON 910 (10" ROUND BOX) GREEN FOR POTABLE WATER AND PURPLE FOR RECLAIMED WATER.
11. FINISH GRADE, TYP.

FLOW CHART

SIZE	GPM
1/2"	4
3/4"	7
1"	12
1-1/4"	22
1-1/2"	30
2"	50
2-1/2"	70
3"	110
4"	190
6"	425

PVC LATERAL LINE TRANSITION TO BLANK TUBING DETAIL

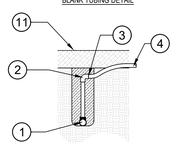

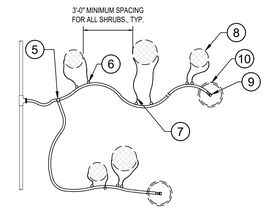

7 TYPICAL LANDSCAPE DRIP (PARKS)

NTS P-CO-SFS-33

LEGEND:

1. FINISHED GRADE, TYP.
2. ROOT WATERING SYSTEM.
3. DRIP BUBBLER OR EMITTER (2 GPH EMITTER OR EQUAL).
4. CONNECTION TO PVC DRIP LATERAL LINE (PER MANUFACTURER'S RECOMMENDATION).
5. LATERAL LINE FITTINGS: PVC SCH 40 FITTINGS.
6. LATERAL LINE: PVC SCH 40 PIPING PER LEGEND.

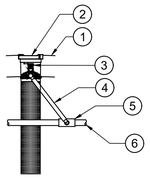

ROOT WATERING LOCATION DETAIL

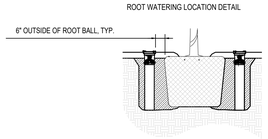

8 TREE DEEP ROOT WATERING

NTS P-CO-SFS-37

LEGEND:

1. FINISH GRADE, TYP.
2. VALVE BOX AND EXTENSIONS AS REQUIRED TO MEET DEPTH OF MAIN LINE (COLOR TO BE GREEN FOR POTABLE OR PURPLE FOR RECLAIMED).
3. SCH 40 MAIN LINE PER LEGEND.
4. SCH 80 MALE ADAPTER.
5. BRASS UNION.
6. WILKINS ZURN 500XL PRESSURE REGULATOR WITH BUILT IN UNION (PER LEGEND).
7. SCH 80 MALE ADAPTER.
8. SCH 40 MAIN LINE PER LEGEND.
9. PRESSURE GAUGES MOUNTED ON MAIN LINE WITH SCH 80 TEE FITTINGS AND 90 DEGREE FITTINGS SO THE GAUGES CAN BE READ FROM ABOVE GRADE.

NOTE: 2-1/2" MAIN LINE IN SIZE OR GREATER TO BE CLA-VALVE PER STANDARD DETAILS.

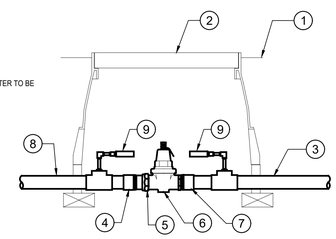

PRESSURE NOTES:

1. CONTRACTOR TO RUN PRESSURE TEST ON THE IRRIGATION POINT OF CONNECTION PRIOR TO INSTALLATION OF IRRIGATION MAIN LINE. CONTRACTOR TO PROVIDE WRITTEN DOCUMENTATION OF AVAILABLE PRESSURE AT THE POINT OF CONNECTION TO THE CITY 72 HOURS PRIOR TO ORDERING OF ANY MAIN LINE MATERIALS.
2. IF ANY DISCREPANCIES ARE FOUND OR LOW PRESSURE, THE CONTRACTOR IS TO COORDINATE WITH THE CITY PRIOR TO PURCHASING AND INSTALLATION OF ANY IRRIGATION COMPONENTS TO REMEDY THE LOW PRESSURE ISSUES.
3. INSTALL PRESSURE REGULATOR PER MANUFACTURER'S RECOMMENDATIONS.

9 PRESSURE REGULATOR 2 INCH OR LESS

NTS P-CO-SFS-40

LEGEND:

1. FINISH GRADE, TYP.
2. GROUND COVER MULCH PER LEGEND.
3. COMPACTED NATIVE SOIL BACKFILL MATERIAL. COMPACTED TO 90% RELATIVE COMPACTION.
4. SAND BACKFILL MATERIAL ON MAIN LINE PER STANDARD DETAILS.
5. SCH 80 MAIN LINE FITTINGS.
6. SCH 40 PVC MAIN LINE (GLUED) SIZE PER LEGEND FOR VALVE SIZE.
7. SCH 80 FITTING (90 DEGREE ELBOW).
8. SCH 40 BALL VALVE.
9. CARSON 1220 VALVE BOX (GREEN IN COLOR FOR POTABLE WATER AND PURPLE FOR RECLAIMED WATER).
10. COMMERCIAL DRIP VALVE PER LEGEND. FILTER AND PRESSURE REGULATOR ARE TO BE SEPARATE.
11. SCH 40 FEMALE ADAPTER.
12. DRAIN ROCK BACKFILL MATERIAL (3/4" IN SIZE).
13. CONCRETE BRICK OR PAVER.
14. PVC DRIP LATERAL LINE: SCH 40 PVC PIPING WITH SCH 40 FITTINGS PER LEGEND (SIZED PER PLAN).
15. NATIVE SOIL, TYP.

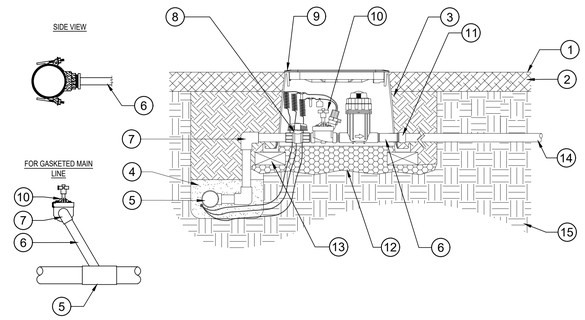

10 COMMERCIAL DRIP VALVE

NTS P-CO-SFS-42

LEGEND:

1. 12.00'
2. CAUTION
3. RECLAIMED WATER
4. DO NOT DRINK
5. ADVERTENCIA AGUA IMPURA NO TOMAR
6. 9"
7. 18" - 24"

NOTES:

1. INSTALL SIGNS AT ALL POINTS OF PUBLIC ACCESS (GATES, DRIVEWAYS, ETC.) AND AT 300 FEET INTERVALS (MINIMUM) ALONG PROJECT FENCELINE OR BORDER. IF EFFLUENT IS STORED IN PONDS, PROVIDE SIGNAGE AT PONDS.
2. SIGNS SHALL BE BILINGUAL, IN ENGLISH AND SPANISH.
3. PROVIDE METAL SIGN WITH WHITE LETTERS ON PURPLE BACKGROUND.
4. MOUNT SIGN ON FENCE OR METAL POST.
5. REFERENCE NDEP WTS-1A FOR ALTERNATE SIGNS THAT ARE ACCEPTABLE.

11 EFFLUENT WARNING SIGN

NTS P-CO-SFS-41

LEGEND:

1. FINISH GRADE, TYP.
2. VALVE BOX: CARSON 1220 RECTANGULAR BOX (GREEN IN COLOR FOR POTABLE WATER AND PURPLE IN COLOR FOR RECLAIMED WATER).
3. VALVE BOX: CARSON 910 ROUND BOX (GREEN IN COLOR FOR POTABLE WATER AND PURPLE IN COLOR FOR RECLAIMED WATER).
4. GROUND COVER MULCH PER LEGEND.
5. COMPACTED NATIVE SOIL BACKFILL MATERIAL.
6. CONCRETE BRICK OR PAVER FOR VALVE BOX SUPPORT.
7. DRAIN ROCK BACKFILL MATERIAL: 3/4" DRAIN ROCK.
8. NATIVE SOILS, TYP.

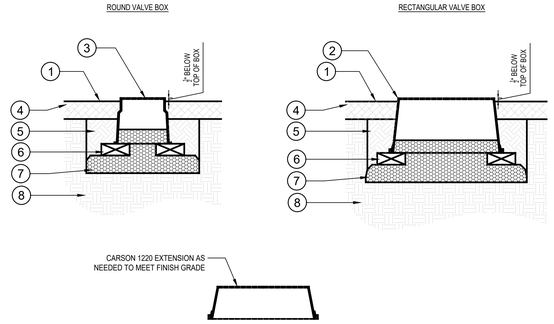

12 VALVE BOX INSTALLATION

NTS P-CO-SFS-43

LEGEND

1. FINISH GRADE
2. MOUND 2" ABOVE FINISH GRADE
3. MATCH (E) AC THICKNESS BUT IN NO CASE < 2-1/2"
4. 6" MIN. TYPE 2, CLASS B AGGREGATE BASE PER SSPWC SECTION 200.01.03 COMPACTED TO 95% MAX. DENSITY
5. CLASS E BACKFILL PER SSPWC SECTION 200.03.06 PLACED IN 8--INCH LOOSE LIFTS COMPACTED TO 90% MAX. DENSITY
6. CLASS E BACKFILL PER SSPWC SECTION 200.03.06 PLACED IN 8--INCH LOOSE LIFTS COMPACTED TO 85% MAX. DENSITY
7. 3-INCH WIDE POLYETHYLENE PLASTIC, METALLIC CORE DETECTABLE WARNING TAPE COLORED PURPLE, WITH IDENTIFICATION TO READ "CAUTION, BURIED RECLAIMED WATER LINE BELOW" OR SIMILAR. SEE NOTE 4
8. TRACER WIRE - #12 AWG, INSULATED, STRANDED COPPER THHN 600V. ATTACHED TO TOP OF PIPE WITH DUCT TAPE AT MAX. 6' INTERVALS
9. PIPE ZONE - CLASS A BACKFILL PER SSPWC SECTION 200.03.02 PLACED IN 8-INCH LOOSE LIFTS ON EACH SIDE OF THE PIPE AND THROUGHOUT THE PIPE ZONE COMPACTED TO 90% MAX. DENSITY
10. BACKFILL MATERIAL SHALL BE THOROUGHLY WORKED INTO THE PIPE HAUNCHES WITH A J-BAR OR OTHER ACCEPTABLE DEVICE, TYP. BOTH SIDES OF PIPE

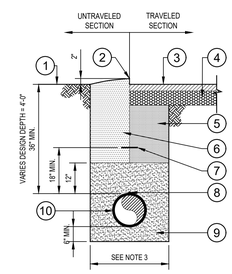

NOTES:

1. TRAVELED ROADS OR ROAD SHOULDERS THAT ARE NOT PAVED SHALL BE BACKFILLED WITH CLASS E MATERIAL COMPACTED TO 90% MAX. DENSITY. THE FINISH SURFACE SHALL MATCH THE CONDITIONS WHICH EXISTED PRIOR TO CONSTRUCTION.
2. ANY CONDITIONS OF AN ENCROACHMENT OR RIGHT-OF-WAY PERMIT WHICH MAY DIFFER FROM THE ABOVE WILL GOVERN IN APPLICABLE AREAS.
3. FOR UNSUPPORTED TRENCHES, OR THOSE TRENCHES SUPPORTED BY HYDRAULIC JACKS, THE ALLOWABLE TRENCH WIDTH SHALL BE LIMITED TO THE PIPE DIAMETER PLUS 12-INCHES (MINIMUM) OR THE PIPE DIAMETER PLUS 24-INCHES (MAXIMUM). WHEN MOVEABLE TYPE TRENCH SHIELDS ARE USED, THE SHIELD SHALL REST ON TOP OF A SHELF CONSTRUCTED ABOVE THE TOP OF THE PIPE AND TO THE SIDE. THE TRENCH WIDTH FROM THE TOP OF THE PIPE DOWN SHALL BE THE SAME AS FOR UNSUPPORTED TRENCHES. THE TRENCH WIDTH ABOVE THE TOP OF THE PIPE SHALL BE AS REQUIRED FOR THE MOVEABLE SHIELD AND SHELF. WHERE MOVEABLE TRENCH SHIELDS ARE USED BELOW THE TOP OF PIPE, THE TRENCH WIDTH SHALL BE A MINIMUM OF 2-1/2 PIPE DIAMETERS ON EITHER SIDE OF THE PIPE. THIS IS TO PREVENT DISTURBING THE PIPE OR ITS EMBEDMENT WHILE PULLING THE SHIELD FORWARD. ALL TRENCHING MUST CONFORM TO OSHA TRENCHING AND EXCAVATION SAFETY SPECIFICATIONS, AS ADOPTED BY CITY COUNCIL.
4. BURIED WARNING AND IDENTIFICATION TAPE SHALL BE POLYETHYLENE PLASTIC, METALLIC CORE DETECTABLE MARKING TAPE. AWWA, APWA, ACID AND ALKALI RESISTANT, PERMANENT MARKING, UNAFFECTED BY MOISTURE OR SOIL. MINIMUM FIVE (5) MILS THICK BY 3-INCHES WIDE. WARNING TAPE SHALL BE MANUFACTURED SPECIFICALLY FOR LOCATING, WARNING, AND IDENTIFICATION OF BURIED UTILITY LINES. APWA COLOR CODED PURPLE FOR RECLAIMED WATER WITH WARNING AND IDENTIFICATION IMPRINTED IN BOLD BLACK LETTERS CONTINUOUSLY OVER THE ENTIRE TAPE LENGTH. WARNING AND IDENTIFICATION TO READ, "CAUTION: BURIED RECLAIMED WATER LINE BELOW" OR SIMILAR.
5. CLASS C BACKFILL PER SSPWC SECTION 200.03.04 MAY BE USED UNDER SPECIAL CONDITIONS WITH RECOMMENDATION BY THE DESIGN ENGINEER AND APPROVAL BY THE CITY OF SPARKS.

13 TYPICAL TRENCH SECTION (RECLAIMED WATER TREATED EFFLUENT)

1/2" = 1'-0" P-CO-SFS-44

tsk

225 South Arlington Avenue,
Suite A
Reno NV, 89501
phone: 775.857.2949
fax: 775.857.2403
www.tska.com

THESE DRAWINGS AND SPECIFICATIONS ARE THE PROPERTY OF TATE SNYDER KIMSEY ARCHITECTS AND MAY NOT BE REPRODUCED OR USED FOR ANY PURPOSE WITHOUT THE ARCHITECTS WRITTEN CONSENT. AS INSTRUMENTS OF SERVICE, THESE DOCUMENTS ARE NOT FINAL AND READY FOR USE, AND THEREFORE NOT VALID, UNLESS THEY ARE SEALED, SIGNED AND DATED.

Copyright, Ltd 2022

Consultant

LAGE design
LANDSCAPE ARCHITECTURE PLANNING
LAGE DESIGN, INC.
314 S. WATER ST. STE 120
HENDERSON NV, 89015
WWW.LAGEDESIGNINC.COM
(702) 479-5225

PLEASE RECYCLE

Project

SPARKS Fire Station #6

WINGFIELD HILLS ROAD, SPARKS NEVADA 89436

Job No: 22-043

Owner

CITY OF SPARKS

REGISTERED LANDSCAPE ARCHITECT SHANE ICE 1035 Expires: 06/30/24 STATE OF NEVADA

01/04/2024

BID SET

REVISIONS

REV	DATE	DESCRIPTION

Sheet Title

IRRIGATION DETAILS

Date: JANUARY 4, 2024

Sheet No:

L2.02

LEGEND:

1. FINISHED GRADE
2. OPERATION INDICATOR
3. SUB-SURFACE DRIPLINE: RAIN BIRD XF SERIES DRIPLINE NON-POTABLE: XFSP DRIPLINE

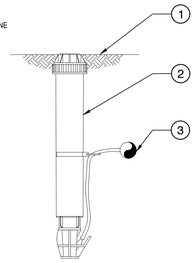

NOTES:

1. INSERT BARB TRANSFER FITTING DIRECTLY INTO DRIPLINE TUBING.
2. VAN NOZZLE MAY BE SET TO CLOSED, OR IF IT IS DESIRED TO SEE SPRAY FROM THE NOZZLE, SET THE ARC TO ¼ PATTERN. THE FLOW FROM THE NOZZLE, 0.3 GPM, SHOULD BE ACCOUNTED FOR IN THE SYSTEM DESIGN.

1 XFS SUB-SURFACE DRIPLINE OPERATION INDICATOR

NTS P-CO-SFS-45

LEGEND:

1. RAIN BIRD CONTROLLER.
2. SOLID BARE COPPER WIRE (#10 AWG) FROM GROUNDING ROD TO CONTROLLER. MAKE WIRE AS SHORT AND STRAIGHT AS POSSIBLE.
3. COVER GROUNDING ROD WITH 10-INCH ROUND VALVE BOX AS SHOWN.
4. 5/8-INCH X 8 FT COPPER CLAD GROUNDING ROD OR GROUNDING PLATE. INSTALL RODS IN SOIL IN A TRIAGULAR PATTERN SPACED A MINIMUM OF 16 FT APART FROM EACH OTHER. GROUNDING GRID TO HAVE A RESISTANCE OF TEN (10) OHMS OR LESS.
5. BARE COPPER WIRE (#10 AWG MIN.) BETWEEN GROUNDING RODS.
6. GROUND ROD CLAMPS OR WELDS.
7. FINISH GRADE.

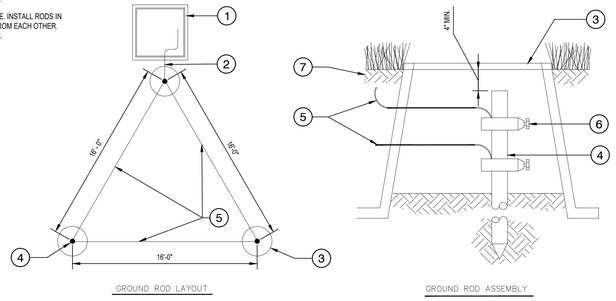

2 GROUNDING ROD GRID FOR CONTROLLERS

NTS P-CO-SFS-46

LEGEND:

1. RAIN BIRD CONTROLLER.
2. SOLID BARE COPPER WIRE (#10 AWG) FROM GROUNDING ROD TO CONTROLLER. MAKE WIRE AS SHORT AND STRAIGHT AS POSSIBLE.
3. COVER GROUNDING ROD WITH 10-INCH ROUND VALVE BOX AS SHOWN.
4. 5/8-INCH X 10 FT COPPER CLAD GROUNDING ROD OR GROUNDING PLATE. INSTALL RODS IN SOIL IN A TRIANGULAR PATTERN SPACED A MINIMUM OF 16 FT APART FROM EACH OTHER. GROUNDING GRID TO HAVE A RESISTANCE OF TEN (10) OHMS OR LESS.
5. BARE COPPER WIRE (#6 AWG MIN.) BETWEEN GROUNDING ROD AND GROUNDING PLATE.
6. GROUND ROD CLAMP OR WELDS.
7. COPPER GROUNDING PLATE.
8. GROUND ENHANCEMENT MATERIAL (IF REQUIRED).
9. FINISH GRADE.

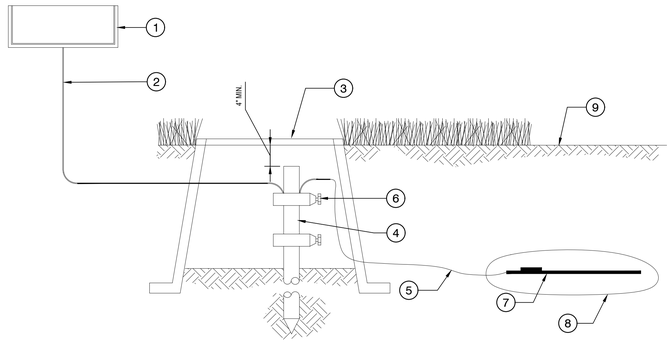

3 GROUNDING PLATE DESIGN LAYOUT

NTS P-CO-SFS-47

LEGEND

1. VALVE BOX / TOP OF GRADE
2. IVM-SOL
3. IVM-SD
4. 3' OF EXTRA MAXICABLE WIRE
5. MAXICABLE
6. WIRE CONNECTION TO GROUNDING PLATE (ROD)
7. GROUNDING PLATE
8. DBR / Y WATERPROOF WIRE CONNECTORS

NOTES

1. ONE SURGE DEVICE (IVM-SD) FOR EVERY 500' OR EVERY 15 DEVICES

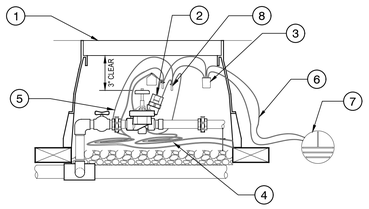

4 IVM-SD (SURGE DEVICE)

NTS P-CO-CAD5-89

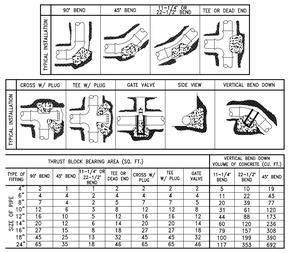

	THRUST BLOCK BEARING AREA (SQ. FT.)							VERTICAL BEND DOWN VOLUME OF CONCRETE (CU. FT.)	
TYPE OF FITTING	90° BEND	45° BEND	11-1/4° OR 22-1/2° BEND	TEE OR DEAD END	CROSS W/ PLUG	TEE W/ PLUG	GATE VALVE	11-1/4° BEND	22-1/2° BEND	45° BEND
SIZE OF PIPE 4"	2	1	1	2	2	2	2	5	10	19
6"	4	4	2	4	4	4	4	11	22	43
8"	7	4	2	5	7	7	5	20	39	77
10"	12	6	3	8	12	12	8	31	61	120
12"	16	10	5	12	16	16	12	44	88	173
14"	20	12	6	14	20	20	14	60	120	236
16"	27	15	8	18	27	27	18	79	157	308
18"	45	25	13	32	45	45	32	100	199	390
24"	65	35	18	46	65	65	46	117	353	692

NOTES:

1. THRUST BLOCKS TO BE CONSTRUCTED OF PORTLAND CEMENT CONCRETE (P.C.C.) WITH THE FOLLOWING CHARACTERISTICS PER SSPWC SECTION 202.01.12: 4,000 PSI MINIMUM COMPRESSIVE STRENGTH AT 28 DAYS, MINIMUM 6 SACKS OF CEMENT PER CUBIC YARD OF CONCRETE, MAXIMUM WATER CEMENT RATIO OF 0.45, AIR ENTRAINMENT OF 6% ±1.5%, MAXIMUM SLUMP 4-INCHES. POLYPROPYLENE OR CELLULOSE FIBERS SHALL BE ADDED TO THE P.C.C. AT 1.5 LBS. PER CUBIC YARD. ALL MATERIALS SHALL CONFORM TO THE STANDARD SPECIFICATIONS FOR PUBLIC WORKS CONSTRUCTION, AS ADOPTED BY CITY COUNCIL.
2. AREAS GIVEN ARE FOR CLASS 150 PIPE AT TEST PRESSURES OF 150 PSI WITH 2000 PSF SOIL BEARING CAPACITY. INSTALLATIONS USING DIFFERENT PIPE, TEST PRESSURES, AND/OR SOIL TYPES SHOULD ADJUST AREAS ACCORDINGLY, SUBJECT TO APPROVAL BY THE CITY ENGINEER.
3. THRUST BLOCKS TO BE POURED AGAINST UNDISTURBED SOIL.
4. WRAP VALVES/FITTINGS WITH 8 MILS MIN. THICKNESS POLYETHYLENE WRAP TO SERVE AS BOND BREAKER. POUR THRUST BLOCK SO ACCESS TO FLANGES AND BOLTS IS NOT OBSTRUCTED.

5 RECLAIMED WATER THRUST BLOCK

1/4" = 1'-0" P-CO-SFS-14

LEGEND

1. CAST IRON VALVE BOX AND COVER. EPOXY COATED PURPLE MARKED "RECLAIMED WATER" OR "EFFLUENT", REF. STD. DETAIL S-510 / RECLAIMED WATER GATE VALVE
2. STAINLESS STEEL TAPPING SLEEVE X FLG (SIZE AS SPECIFIED IN DESIGN DRAWINGS). TAPPING SLEEVE SHALL BE REATED FOR 200 PSI WORKING PRESSURE
3. CONCRETE THRUST BLOCK, REF. STD. DETAIL S-513 / RECLAIMED WATER THRUST BLOCK
4. EXISTING RECLAIMED WATER MAIN, SIZE AND TYPE PER DESIGN DRAWINGS
5. GATE VALVE, FLG X FLG, REF. STD. DETAIL S-510 RECLAIMED WATER GATE VALVE
6. FLG X MJ ADAPTER W/ WEDGE STYLE MECHANICAL JOINT RESTRAINT OR FLG X PUSH-ON ADAPTER, SIZE AND TYPE AS SPECIFIED IN DESIGN DRAWINGS
7. NEW RECLAIMED WATER MAIN / SERVICE, SIZE AND TYPE PER DESIGN DRAWINGS

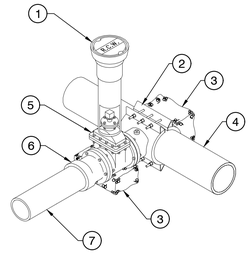

6 RECLAIMED WATER HOT TAP

3/4" = 1'-0" P-CO-SFS-52

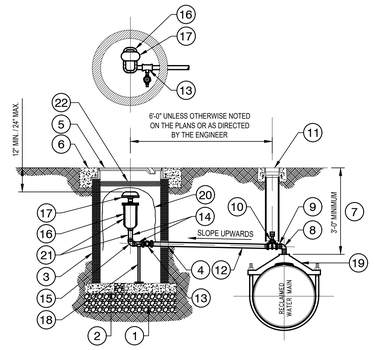

LEGEND

1. 12" CLASS C BACKFILL
2. 6" 3000 PSI PORTLAND CEMENT CONCRETE BASE SLAB WITH 4" DIAMETER DRAIN HOLE
3. 30" DIAMETER CLASS III RCP, LENGTH AS REQUIRED TO FIT DEPTH.
4. FILL VOID WITH NON-SHRINK GROUT
5. 30" DIAMETER VENTED, BOLT-DOWN FRAME AND COVER. FRAME AND COVER SHALL BE EPOXY COATED PURPLE AND MARKED "RECLAIMED WATER AV" OR "EFFLUENT AV"
6. 12" CONCRETE COLLAR PER SSPWC SECTION 202.01.12, AS ADOPTED BY CITY COUNCIL
7. TOP OF PIPE PLACED SUFFICIENTLY DEEP TO PROVIDE POSITIVE SLOPE TO AIR VALVE.
8. 2" BRASS STREET ELBOW
9. 2" BRASS CLOSE NIPPLE
10. 2" CLASS 200, IRON BODY, FUSION BONDED EPOXY COATED, NON-RISING STEM, SOLID WEDGE GATE VALVE WITH OPERATING NUT PER STANDARD DETAIL S-510
11. 6" SDR-35 PVC CONDUCTOR PIPE, CAST IRON VALVE BOX AND COVER PER STANDARD DETAIL S-510. INSTALL 6" CONCRETE COLLAR PER SSPWC SECTION 202.01.12, AS ADOPTED BY CITY COUNCIL
12. 1" PRESSURE CLASS 200 (DR-9) POLYETHYLENE (PE) PIPE WITH 2" X 1" REDUCER. MAINTAIN CONSTANT SLOPE TO AIR VALVE.
13. BLEED VALVE: 1" X 1/2" GALVANIZED STEEL TEE WITH 1/2" GALVANIZED STEEL CLOSE NIPPLE. 1/2" CLASS 200 BRONZE GATE VALVE WITH HANDWHEEL OPERATOR, ORIENTED TO BE OPERATED FROM THE SURFACE
14. 1" BRASS NIPPLE
15. 1" BRASS 90° ELBOW
16. 1" CLASS 200, SINGLE BODY, COMBINATION AIR RELEASE AND AIR VACUUM VALVE, APCO 143C OR APPROVED EQUAL
17. 1" IRON BODY VENT, MCDONALD MODEL 908 OR APPROVED EQUAL
18. IRON PIPE SUPPORT AND BASE
19. FUSION BONDED EPOXY OR NYLON COATED SERVICE SADDLE WITH DOUBLE STAINLESS STEEL STRAPS AND 2" TAP PER STANDARD DETAIL S-505
20. QTY. TWO (2), 4' X 4' X 3/32" METER PIT INSULATING BLANKETS
21. WRAP ALL EXPOSED PIPING AND VALVE BODY WITH ROLL TYPE PIPE INSULATION
22. 4-INCHES THICK SHEET FOAM INSULATION, CUT TO FIT SNUGLY AND SUSPEND WITHIN VERTICAL 30" DIAMETER CLASS III RCP

7 RECLAIMED WATER 1" COMBINATION AIR VACUUM & AIR RELEASE VALVE

3/4" = 1'-0" P-CO-SFS-53

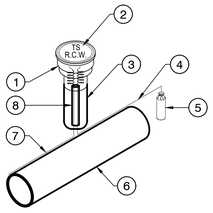

LEGEND

1. 6" CAST IRON VALVE BOX
2. TEST STATION (VALVE) BOX COVER, SEE NOTE #3
3. RISER
4. LEAD WIRE
5. 3# ANODE
6. RECLAIMED WATER MAIN
7. WIRE #12 AUG, INSULATED, STRANDED COPPER THHN 600V
8. SEE NOTE #5

NOTES:

1. TEST STATIONS SHALL BE A MAXIMUM OF 500 FEET APART
2. A 3# ANODE WILL BE ATTACHED ON THE TRACER WIRE
3. TEST STATION BOX COVER SHALL BE EPOXY COATED PURPLE AND MARKED "TS R.C.W." OR SIMILAR
4. TEST LEAD WIRE TO BE LONG ENOUGH TO EXTEND FOUR (4) FEET ABOVE GROUND LEVEL AND SHALL TERMINATE IN TEST STATION BOX
5. USE 3/4" PVC OR PE PIPE AS A LEAD WIRE CONDUCTOR PIPE. PLACE APPROXIMATELY 6-INCHES ABOVE CARRIER PIPE AND INTO TEST STATION BOX

8 TEST STATION

3/4" = 1'-0" P-CO-SFS-54

tsk

225 South Arlington Avenue,
Suite A
Reno NV, 89501
phone: 775.857.2949
fax: 775.857.2403
www.tska.com

THESE DRAWINGS AND SPECIFICATIONS ARE THE PROPERTY OF TATE SNYDER KIMSEY ARCHITECTS AND MAY NOT BE REPRODUCED OR USED FOR ANY PURPOSE WITHOUT THE ARCHITECTS WRITTEN CONSENT. AS INSTRUMENTS OF SERVICE, THESE DOCUMENTS ARE NOT FINAL AND READY FOR USE, AND THEREFORE NOT VALID, UNLESS THEY ARE SEALED, SIGNED AND DATED.

Copyright, Ltd 2022

Consultant

LAGE design
LANDSCAPE ARCHITECTURE PLANNING
LAGE DESIGN, INC.
314 S. WATER ST. STE 120
HENDERSON NV, 89015
WWW.LAGEDESIGNINC.COM
(702) 479-5225

PLEASE RECYCLE

Project

SPARKS Fire Station #6

WINGFIELD HILLS ROAD, SPARKS NEVADA 89436

Job No: 22-043

Owner

CITY OF SPARKS

REGISTERED LANDSCAPE ARCHITECT
SHANE ICE
1035
Expires: 06/30/24
STATE OF NEVADA
01/04/2024

BID SET

REVISIONS		
REV	DATE	DESCRIPTION

Sheet Title

IRRIGATION DETAILS (CONT'D)

Date: JANUARY 4, 2024

Sheet No:

L2.03

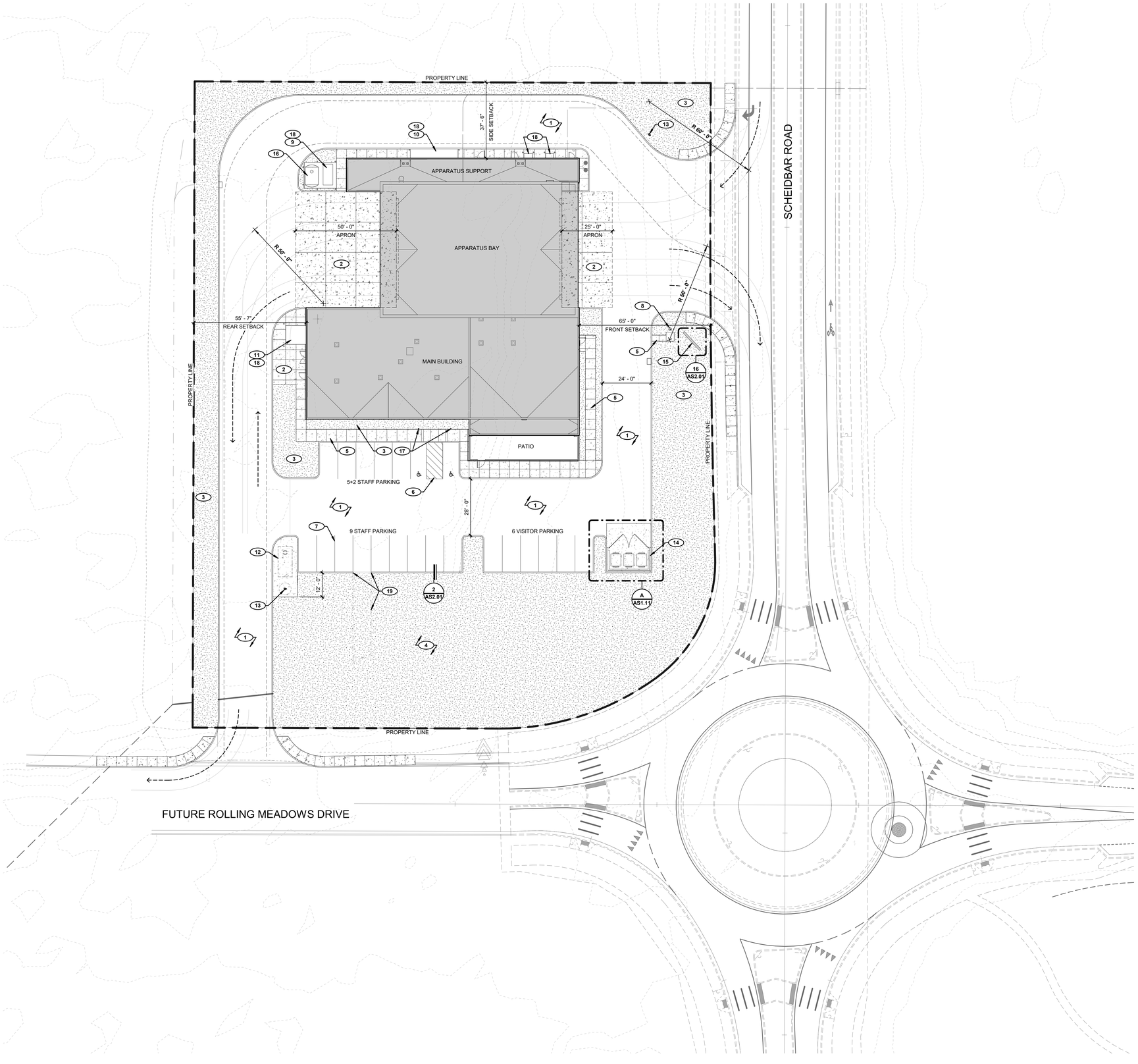

1 OVERALL SITE PLAN
SCALE: 1" = 20'-0"

NORTH

0' 10' 20' 40'

GENERAL NOTES

1. CONTRACTOR TO VERIFY DIMENSIONS ON FIELD PRIOR TO COMMENCEMENT OF ANY SITE WORK. DO NOT SCALE DRAWINGS.
2. REFER TO CIVIL DRAWINGS FOR ADDITIONAL INFORMATION ON SCOPE OF WORK AND LIMIT OF CONSTRUCTION.
3. REFER TO CIVIL DRAWINGS FOR PARKING, STREET & CURB DIMENSIONS, AND STRIPING INFORMATION.
4. REFER TO LANDSCAPE DRAWINGS FOR ADDITIONAL SITE INFORMATION INCLUDING SITE FURNISHINGS AND HARDSCAPE PLANS.
5. REFER TO CIVIL DRAWINGS FOR HORIZONTAL CONTROL.
6. REFER TO CIVIL DRAWINGS FOR STREET DEVELOPMENT OUTSIDE OF PROPERTY LINE.
7. ALL SITE / RETAINING WALLS TO HAVE ANTI-GRAFFITI COATING, UNLESS NOTED OTHERWISE.
8. REFER TO SHEET A2.01 FOR ROOM FINISH SCHEDULE AND MATERIAL SCHEDULE.

KEYNOTES

1. AC PAVING, REFER TO CIVIL DRAWINGS
2. CONCRETE PAVING WITH CONTROL JOINTS, REFER TO CIVIL DRAWINGS
3. LANDSCAPE AREA, REFER TO LANDSCAPE DRAWINGS
4. TRAINING FIELD AREA, REFER TO LANDSCAPE DRAWINGS
5. CONCRETE SIDEWALK WITH CONTROL JOINTS @ 5'-0" O.C. AND EXPANSION JOINTS @ 30'-0" O.C., UNLESS NOTED OTHERWISE
6. ACCESSIBLE AISLE STRIPING, REFER TO CIVIL DRAWINGS
7. PARKING SPACE STRIPING, REFER TO CIVIL DRAWINGS FOR STRIPING DETAIL
8. FLAGPOLE WITH UP-LIGHT ILLUMINATION, REFER TO SITE DETAIL AND SPECIFICATIONS
9. EMERGENCY POWER GENERATOR, REFER TO ELECTRICAL DRAWINGS
10. SWITCHGEAR EQUIPMENT, REFER TO ELECTRICAL DRAWINGS
11. MECHANICAL EQUIPMENT, REFER TO MECHANICAL DRAWINGS
12. 500 GALLON UNDERGROUND HOLDING TANK / VAULT
13. FIRE HYDRANT, REFER TO CIVIL DRAWINGS
14. TRASH ENCLOSURE, REFER TO ENLARGED SITE PLAN AND DETAILS
15. MONUMENT SIGN, REFER TO DETAIL ON SHEET AS2.01
16. ABOVE GROUND FUEL TANK
17. ACCESSIBLE PARKING SIGNAGE, REFER TO CIVIL DRAWINGS
18. EQUIPMENT PAD, REFER TO STRUCTURAL DRAWINGS
19. CURB CUT - MAINTENANCE VEHICLE ACCESS TO TRAINING FIELD (NO RIP RAP AREA)

LEGEND

- CONCRETE
- ASPHALT
- LANDSCAPE
- PROPERTY LINE

tsk
225 South Arlington Avenue,
Suite A
Reno NV, 89501
phone: 775.857.2949
fax: 775.857.2403
www.tska.com

KOLBY M HARPSTEAD
REGISTERED ARCHITECT
No. 8775
01/04/2024
STATE OF NEVADA

THESE DRAWINGS AND SPECIFICATIONS ARE THE PROPERTY OF TATE SNYDER KIMSEY ARCHITECTS AND MAY NOT BE REPRODUCED OR USED FOR ANY PURPOSE WITHOUT THE ARCHITECTS WRITTEN CONSENT. AS INSTRUMENTS OF SERVICE, THESE DOCUMENTS ARE NOT FINAL AND READY FOR USE, AND THEREFORE NOT VALID, UNLESS THEY ARE SEALED, SIGNED AND DATED.

Copyright, Ltd 2024

Consultant

PLEASE RECYCLE

Project

SPARKS Fire Station #6

6963 SCHEIDBAR ROAD, SPARKS NEVADA 89436

Job No: 22-043

Owner

CITY OF SPARKS

BID SET

REVISIONS		
REV	DATE	DESCRIPTION
A	05.18.23	Review Comments

Sheet Title

OVERALL SITE PLAN

Date: JANUARY 4, 2024

Sheet No:

AS1.01

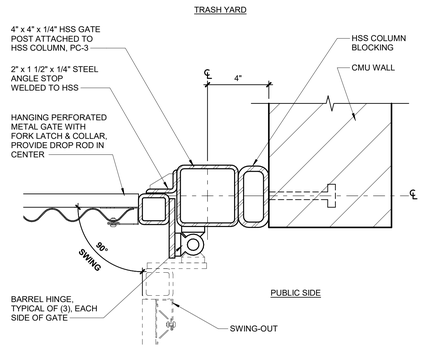

12 GATE JAMB DETAIL AT TRASH YARD
SCALE: 3" = 1'-0"

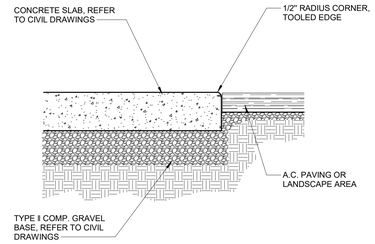

8 EDGE OF SLAB/CONCRETE APRON
SCALE: 1 1/2" = 1'-0"

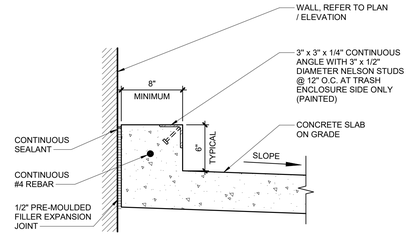

4 CONCRETE CURB AT TRASH ENCLOSURE
SCALE: 1 1/2" = 1'-0"

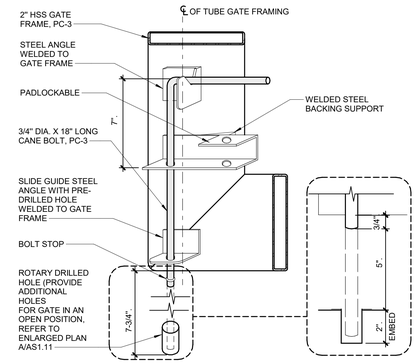

11 CANE BOLT DETAIL AT GATES
SCALE: 3" = 1'-0"

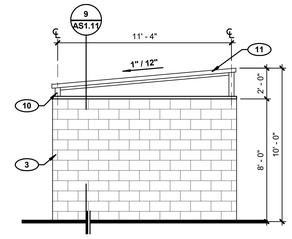

4A TRASH ENCLOSURE- EAST ELEVATION
SCALE: 1/4" = 1'-0"

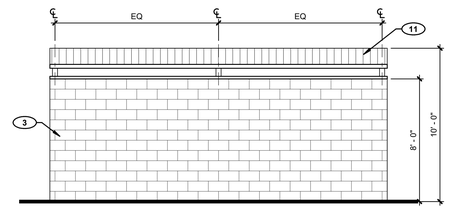

3A TRASH ENCLOSURE- SOUTH ELEVATION
SCALE: 1/4" = 1'-0"

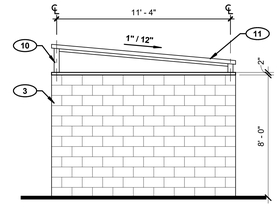

2A TRASH ENCLOSURE- WEST ELEVATION
SCALE: 1/4" = 1'-0"

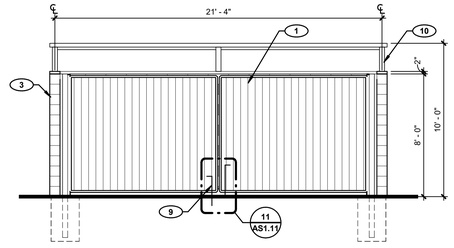

1A TRASH ENCLOSURE- NORTH ELEVATION
SCALE: 1/4" = 1'-0"

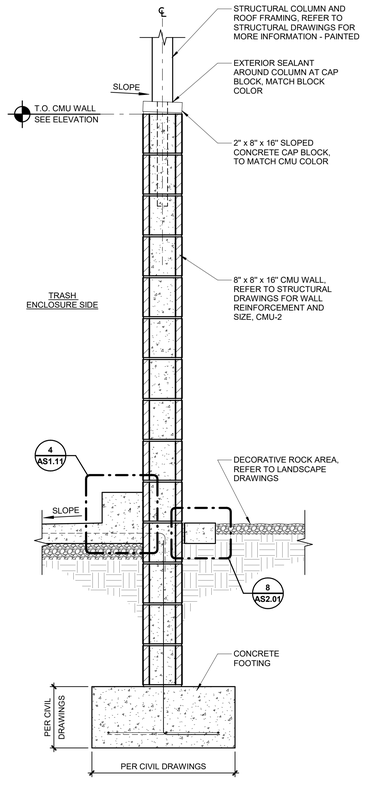

9 TRASH ENCLOSURE WALL DETAIL
SCALE: 1" = 1'-0"

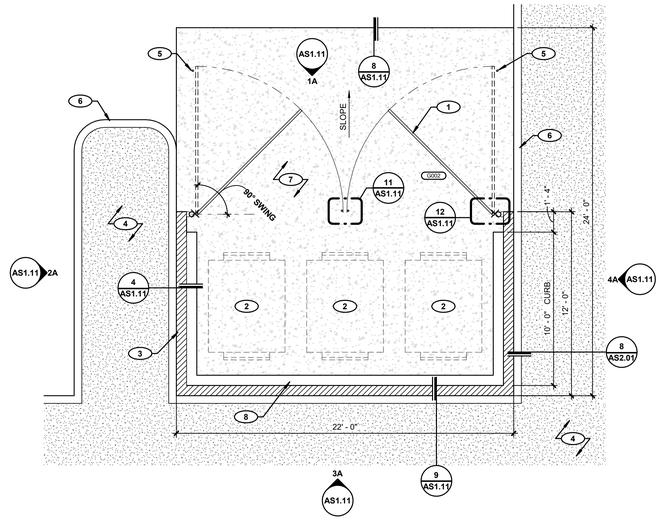

A ENLARGED TRASH ENCLOSURE PLAN
SCALE: 1/4" = 1'-0"

GENERAL NOTES

1. CONTRACTOR TO VERIFY DIMENSIONS ON FIELD PRIOR TO COMMENCEMENT OF ANY SITE WORK. DO NOT SCALE DRAWINGS.
2. REFER TO LANDSCAPE DRAWINGS FOR ADDITIONAL SITE INFORMATION INCLUDING SITE FURNISHINGS AND HARDSCAPE PLANS.
3. REFER TO CIVIL DRAWINGS FOR ADDITIONAL DETAILS NOT REFERENCED ON ARCHITECTURAL SITE DETAIL SHEET(S).
4. REFER TO CIVIL DRAWINGS FOR CURB DIMENSIONS.

KEYNOTES

1. PAIR OF 10' - 0" HANGING PERFORATED METAL PANEL GATE (PC-3), WITH FORK LATCH AND COLLAR, PROVIDE DROP ROD IN CENTER, REFER TO DETAILS ON THIS SHEET
2. TRASH RECEPTACLE SHOWN DASHED, NOT IN CONTRACT
3. 8" x 8" x 16" CMU WALL WITH 2" CAP BLOCK, CMU-2
4. LANDSCAPE AREA, REFER TO LANDSCAPE DRAWINGS
5. ROTARY DRILL 7/8" DIAMETER HOLE FOR EACH CANE BOLT AS INDICATED, TO HOLD GATES IN OPEN POSITION
6. CONCRETE CURB, REFER TO CIVIL DRAWINGS
7. CONCRETE SLAB, REFER TO CIVIL DRAWINGS
8. 6" HIGH CONCRETE CURB AT TRASH ENCLOSURE, REFER TO DETAIL ON THIS SHEET
9. 3/4" DIAMETER x 18" LONG LOCKABLE CANE BOLT, (1) PER GATE LEAF
10. HSS COLUMN AND ROOF FRAMING, REFER TO STRUCTURAL DRAWINGS, PC-3
11. METAL DECK ROOF, REFER TO STRUCTURAL DRAWINGS, PC-3

tsk
225 South Arlington Avenue,
Suite A
Reno NV, 89501
phone: 775.857.2949
fax: 775.857.2403
www.tska.com

THESE DRAWINGS AND SPECIFICATIONS ARE THE PROPERTY OF TATE SNYDER KIMSEY ARCHITECTS AND MAY NOT BE REPRODUCED OR USED FOR ANY PURPOSE WITHOUT THE ARCHITECTS WRITTEN CONSENT. AS INSTRUMENTS OF SERVICE, THESE DOCUMENTS ARE NOT FINAL AND READY FOR USE, AND THEREFORE NOT VALID, UNLESS THEY ARE SEALED, SIGNED AND DATED.

Copyright, Ltd 2024

Consultant

PLEASE RECYCLE

Project
SPARKS Fire Station #6

6963 SCHEIDBAR ROAD, SPARKS NEVADA 89436

Job No: 22-043

Owner
CITY OF SPARKS

BID SET

REVISIONS

REV	DATE	DESCRIPTION
A	05.18.23	Review Comments

Sheet Title
ARCHITECTURAL SITE PLAN (ENLARGED)

Date: JANUARY 4, 2024
Sheet No:
AS1.11

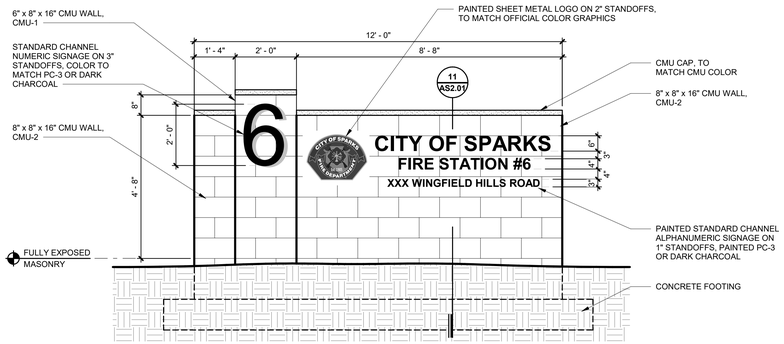

16 MONUMENT SIGN ELEVATION
SCALE: 1/2" = 1'-0"

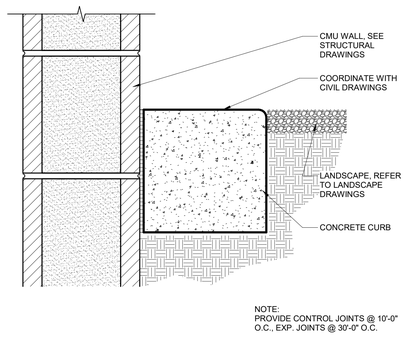

8 MOW CURB AT WALL / LANDSCAPE
SCALE: 3" = 1'-0"

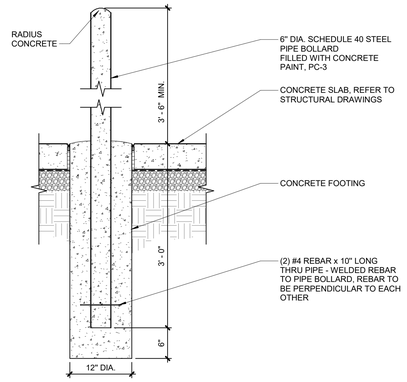

4 BOLLARD
SCALE: 1" = 1'-0"

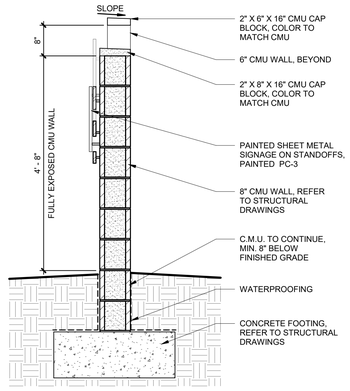

11 MONUMENT SIGN SECTION
SCALE: 3/4" = 1'-0"

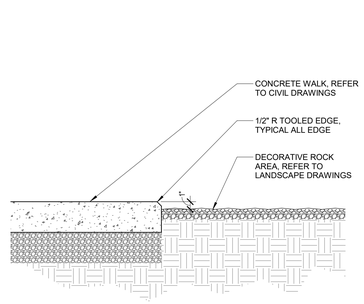

7 HARDSCAPE TRANSITION TO CONCRETE
SCALE: 1 1/2" = 1'-0"

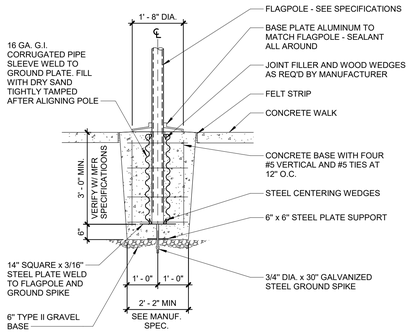

NOTE: CONCRETE FOOTING DIMENSIONS SHOWN ARE BASED UPON THE SPECIFIED FLAGPOLE MANUFACTURERS

3 FLAGPOLE FOOTING
SCALE: 1/2" = 1'-0"

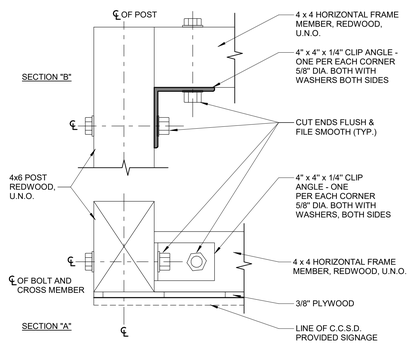

10 SIGN EDGE DETAIL
SCALE: 3" = 1'-0"

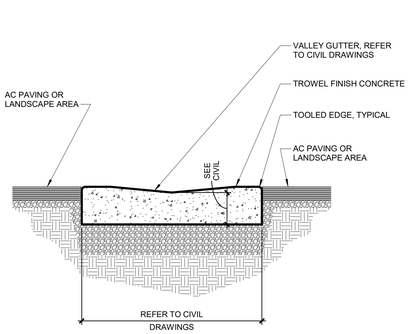

6 VALLEY GUTTER @ AC PAVING
SCALE: 1 1/2" = 1'-0"

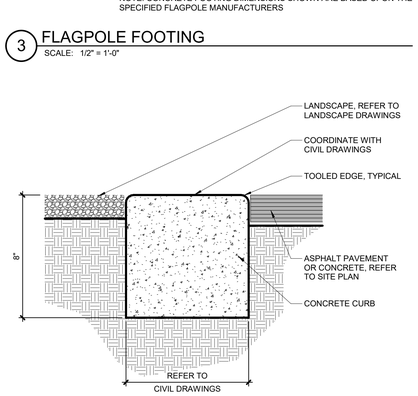

NOTE:
PROVIDE CONTROL JOINTS @ 10'-0" O.C., EXP. JOINTS @ 30'-0" O.C.

2 TRANSITION CURB
SCALE: 3" = 1'-0"

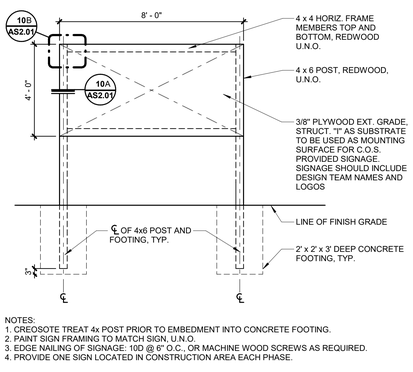

NOTES:
1. CREOSOTE TREAT 4x POST PRIOR TO EMBEDMENT INTO CONCRETE FOOTING.
2. PAINT SIGN FRAMING TO MATCH SIGN, U.N.O.
3. EDGE NAILING OF SIGNAGE: 10D @ 6" O.C., OR MACHINE WOOD SCREWS AS REQUIRED.
4. PROVIDE ONE SIGN LOCATED IN CONSTRUCTION AREA EACH PHASE.

9 CONSTRUCTION SIGN DETAIL
SCALE: 3/8" = 1'-0"

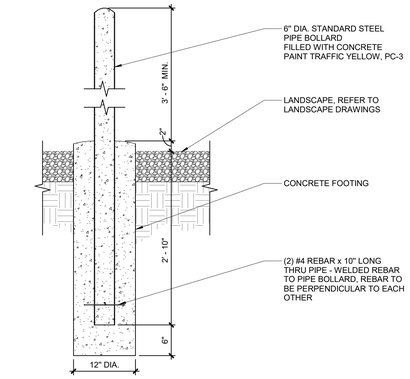

5 SITE BOLLARD
SCALE: 1" = 1'-0"

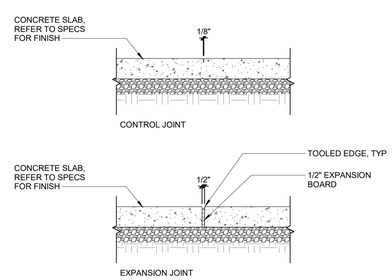

NOTE: SEE SITE PLAN FOR JOINT PATTERN AND STRUCTURAL DRAWINGS FOR MORE INFORMATION. SEE LANDSCAPE PLANS FOR OTHER EXTERIOR CONCRETE INFORMATION

1 JOINT DETAILS
SCALE: 1" = 1'-0"

tsk
225 South Arlington Avenue,
Suite A
Reno NV, 89501
phone: 775.857.2949
fax: 775.857.2403
www.tska.com

THESE DRAWINGS AND SPECIFICATIONS ARE THE PROPERTY OF TATE SNYDER KIMSEY ARCHITECTS AND MAY NOT BE REPRODUCED OR USED FOR ANY PURPOSE WITHOUT THE ARCHITECTS WRITTEN CONSENT. AS INSTRUMENTS OF SERVICE, THESE DOCUMENTS ARE NOT FINAL AND READY FOR USE, AND THEREFORE NOT VALID, UNLESS THEY ARE SEALED, SIGNED AND DATED.

Copyright, Ltd 2024

Consultant

PLEASE RECYCLE

Project
SPARKS Fire Station #6

6963 SCHEIDBAR ROAD, SPARKS NEVADA 89436

Job No: 22-043

Owner
CITY OF SPARKS

BID SET

REVISIONS		
REV	DATE	DESCRIPTION

Sheet Title
ARCHITECTURAL SITE DETAILS

Date: JANUARY 4, 2024
Sheet No:
AS2.01

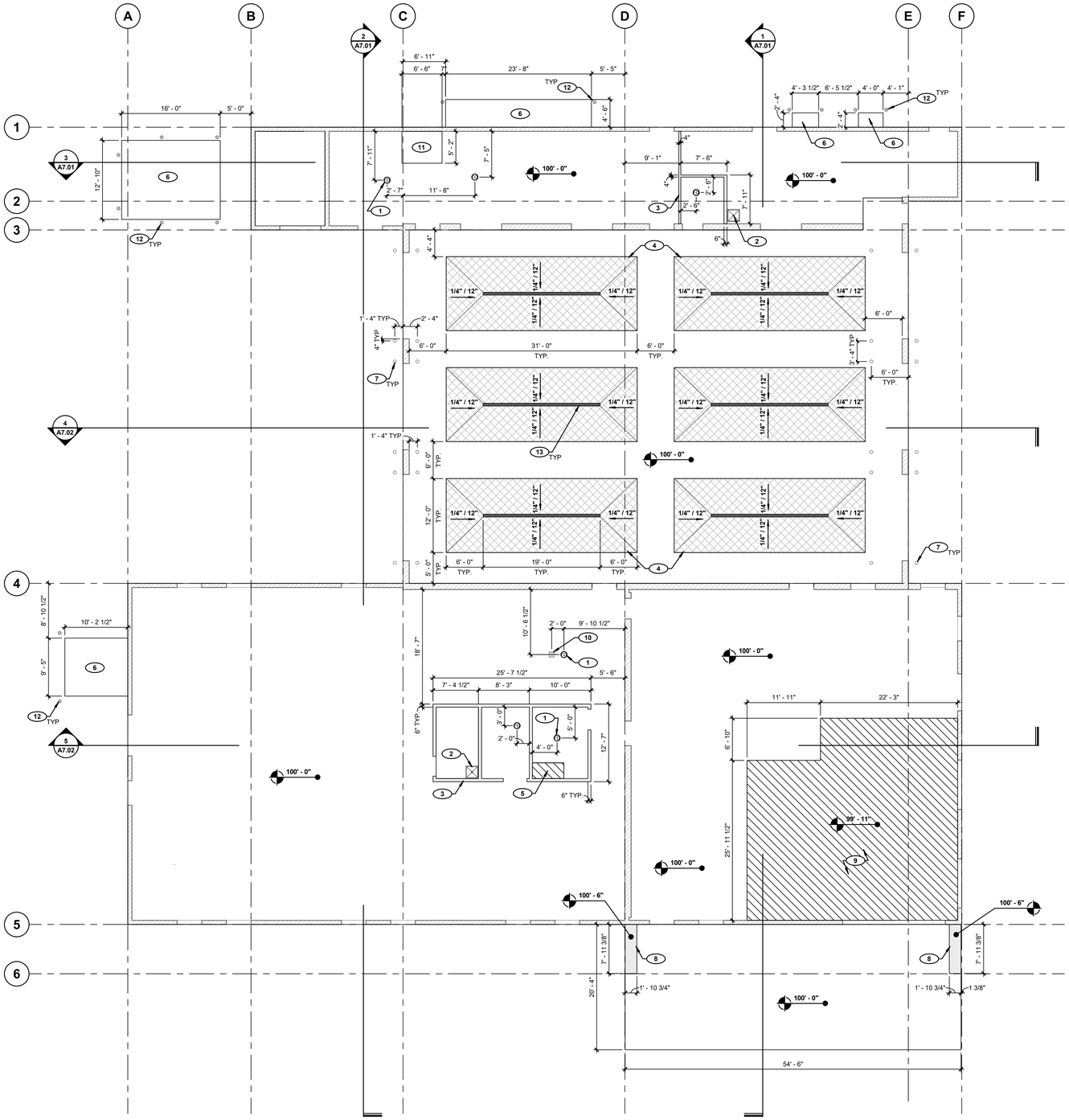

1 SLAB PLAN
SCALE: 1/8" = 1'-0"

NORTH

0' 4' 8' 16'

GENERAL NOTES

1. ALL DIMENSIONS ARE TO FACE OF CONCRETE SLAB, UNLESS NOTED OTHERWISE.
2. ALL DIMENSIONS ARE TO THE CENTERLINE OF FLOOR OPENING / PENETRATION; I.E. FLOOR DRAINS, FLOOR SINKS & FLOOR BOXES UNLESS NOTED OTHERWISE.
3. FLOOR DRAINS, COORDINATE EXACT LOCATIONS WITH PLUMBING DRAWINGS.
4. IF FIRE RESISTANCE RATING IS REQUIRED AT PENETRATING ITEMS THROUGH CONCRETE SLAB, ANNULAR SPACE SHALL BE FILLED WITH APPROVED MATERIAL TO RESIST THE FREE PASSAGE OF SMOKE / FLAME AND OTHER PRODUCTS OF COMBUSTION.

KEYNOTES

1. FLOOR DRAIN, REFER TO PLUMBING DRAWINGS
2. MOP SINK, REFER TO PLUMBING DRAWINGS
3. 4" HIGH CONCRETE CURB, TYPICAL ON WET AREAS
4. SLOPED SLAB FOR DRAINAGE, REFER TO PLAN FOR SLOPE
5. 3/4" SLAB DEPRESSION FOR ADA SHOWER
6. EQUIPMENT / HOUSEKEEPING PAD, REFER TO STRUCTURAL DRAWINGS AND SITE PLAN
7. 6" DIAMETER STEEL CONCRETE FILLED PIPE BOLLARD, PAINTED. SEE DETAIL 4/AS2.01
8. CONCRETE PIER TO EXTEND 6" ABOVE PATIO FINISH CONCRETE SLAB, REFER TO STRUCTURAL DRAWINGS
9. 1" SLAB DEPRESSION FOR EXTREME RUBBER GYM FLOORING
10. FLOOR SINK, REFER TO PLUMBING DRAWINGS
11. 6" HIGH CONCRETE PAD
12. CONCRETE FILLED SITE BOLLARD, PAINTED. SEE DETAIL 5/AS2.01
13. LINEAR TRENCH DRAIN, REFER TO PLUMBING DRAWINGS

LEGEND

- SLOPED SLAB - REFER TO PLAN FOR SLOPE AND ELEVATIONS
- DEPRESSED SLAB - REFER TO PLAN FOR DEPTH
- FLOOR DRAIN, PROVIDE SLOPES TO DRAIN (1/8" PER 1'-0") - REFER TO PLUMBING DRAWINGS
- CONCRETE CURB - REFER TO PLAN FOR THICKNESS, HEIGHT, AND EXTENTS

tsk

225 South Arlington Avenue,
Suite A
Reno NV, 89501
phone: 775.857.2949
fax: 775.857.2403
www.tska.com

KOLBY M HARPSTEAD
REGISTERED
No. 8775
01/04/2024
ARCHITECT
STATE OF NEVADA

THESE DRAWINGS AND SPECIFICATIONS ARE THE PROPERTY OF TATE SNYDER KIMSEY ARCHITECTS AND MAY NOT BE REPRODUCED OR USED FOR ANY PURPOSE WITHOUT THE ARCHITECTS WRITTEN CONSENT. AS INSTRUMENTS OF SERVICE, THESE DOCUMENTS ARE NOT FINAL AND READY FOR USE, AND THEREFORE NOT VALID, UNLESS THEY ARE SEALED, SIGNED AND DATED.

Copyright, Ltd 2024

Consultant

PLEASE RECYCLE

Project

SPARKS Fire Station #6

6963 SCHEIDBAR ROAD, SPARKS NEVADA 89436

Job No: 22-043

Owner

CITY OF SPARKS

CITY OF SPARKS FIRE DEPARTMENT Est. 1905

BID SET

REVISIONS		
REV	DATE	DESCRIPTION

Sheet Title

SLAB PLAN

Date: JANUARY 4, 2024

Sheet No:

A0.01

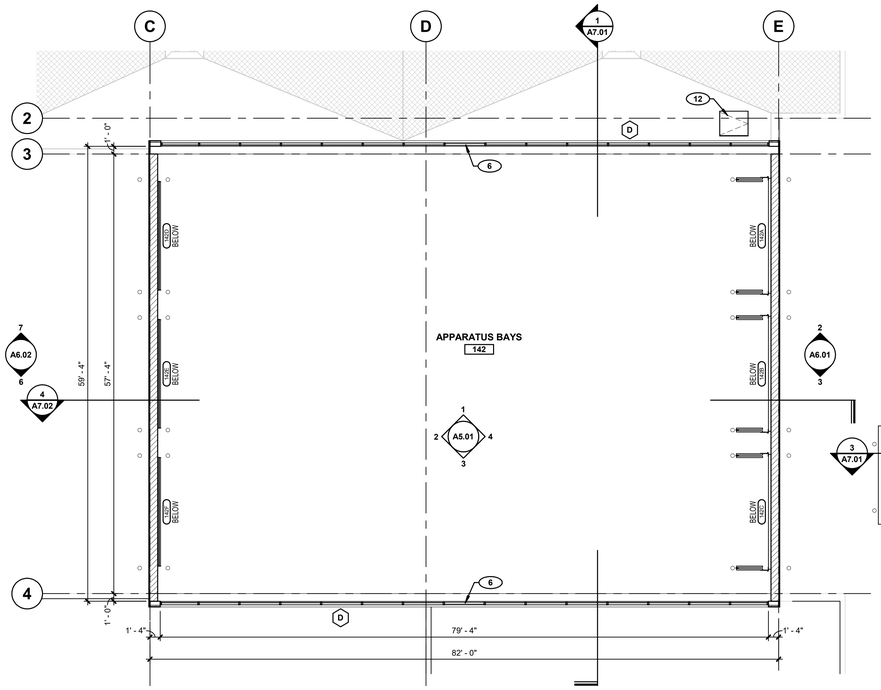

2 CLERESTORY PLAN
SCALE: 1/8" = 1'-0"

NORTH 0' 4' 8' 16'

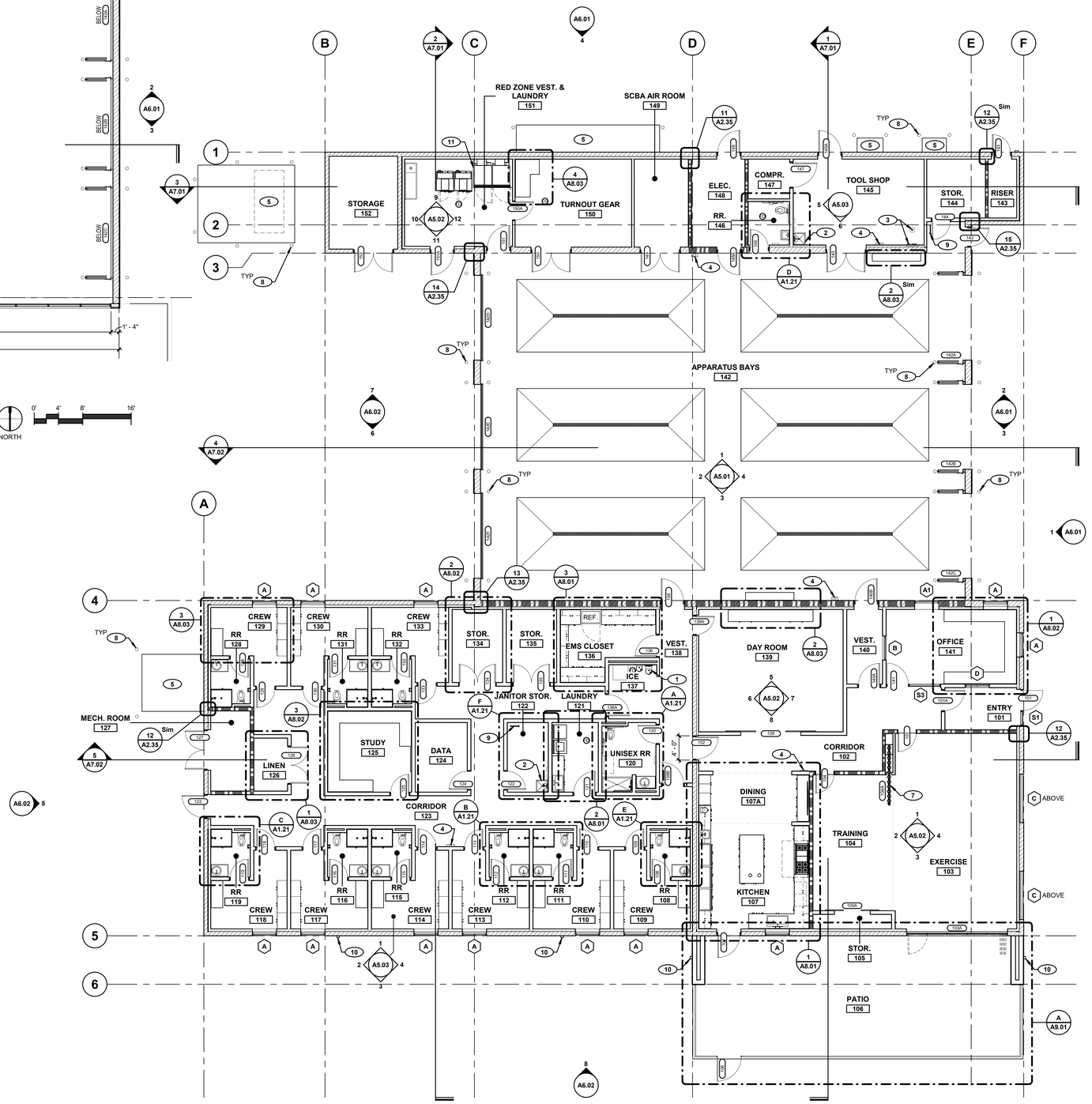

1 OVERALL FLOOR PLAN
SCALE: 1/8" = 1'-0"

NORTH 0' 4' 8' 16'

GENERAL NOTES

1. ALL DIMENSIONS ARE TAKEN FROM FACE OF STUD, MASONRY, OR CONCRETE UNLESS NOTED OTHERWISE.
2. REFER TO STRUCTURAL, MECHANICAL, PLUMBING, AND ELECTRICAL DRAWINGS FOR ADDITIONAL WORK NOT SHOWN ON THIS DRAWING.
3. REFER TO ELECTRICAL DRAWINGS FOR INFORMATION ON ELECTRICAL / DATA ROOMS.
4. REFER TO BUILDING SECTIONS AND WALL SECTIONS FOR WALL INFORMATION.
5. ALL EQUIPMENT (O.F.O.I. AND C.F.C.I.), SHALL COMPLY WITH ACCESSIBILITY REQUIREMENTS.
6. ALL PENETRATION IN PARTITION WALLS AT DATA / ELECTRICAL ROOMS TO BE FULLY SEALED TO MINIMIZE DUST INFILTRATION.
7. METAL WALL BACKING TO BE PROVIDED FOR ALL WALL MOUNTED EQUIPMENT.
8. CASTLE-CUT GYPSUM BOARD TO DECK AND SEAL AT AREAS WITHOUT CEILINGS.
9. FOR FLOORING TYPES AND CONTROL JOINTS: SEE FLOOR FINISH PLAN, ROOM FINISH SCHEDULE AND MATERIAL SCHEDULE.
10. REFER TO WALL PARTITION TYPES AND LIFE SAFETY DRAWINGS FOR RATING SEPARATIONS AND UL RATED DESIGN SHEET FOR REQUIRED FIRE RESISTIVE CONSTRUCTION.
11. FOR COMPLETE DIMENSIONS, REFER TO DIMENSION PLAN. FOR SIGNAGE LOCATIONS, REFER TO SIGNAGE PLAN.

KEYNOTES

1. DRINKING FOUNTAIN WITH BOTTLE FILLER, REFER TO PLUMBING DRAWINGS
2. MOP SINK, REFER TO PLUMBING DRAWINGS
3. EMERGENCY EYE WASH AND SAFETY SHOWER STATION
4. FIRE EXTINGUISHER CABINET, REFER TO LIFE SAFETY PLAN
5. EQUIPMENT / HOUSEKEEPING PAD, REFER TO SITE PLAN
6. MECHANICAL LOUVER, REFER TO WINDOW TYPES AND MECHANICAL DRAWINGS
7. OPERABLE PARTITION
8. 6" DIAMETER STEEL CONCRETE FILLED PIPE BOLLARD, PAINTED (PC-3), REFER TO SLAB PLAN
9. ROOF ACCESS LADDER (PC-3), REFER TO ROOF DETAILS
10. ROOF DRAIN DOWNSPOUT LEADER, REFER TO ROOF PLAN
11. 6" HIGH CONCRETE PAD, REFER TO SLAB PLAN
12. ROOF ACCESS HATCH, REFER TO ROOF DETAILS

tsk

225 South Arlington Avenue,
Suite A
Reno NV, 89501
phone: 775.857.2949
fax: 775.857.2403
www.tska.com

THESE DRAWINGS AND SPECIFICATIONS ARE THE PROPERTY OF TATE SNYDER KIMSEY ARCHITECTS AND MAY NOT BE REPRODUCED OR USED FOR ANY PURPOSE WITHOUT THE ARCHITECTS WRITTEN CONSENT. AS INSTRUMENTS OF SERVICE, THESE DOCUMENTS ARE NOT FINAL AND READY FOR USE, AND THEREFORE NOT VALID, UNLESS THEY ARE SEALED, SIGNED AND DATED.

Copyright, Ltd 2024

Consultant

PLEASE RECYCLE

Project

SPARKS Fire Station #6

6963 SCHEIDBAR ROAD, SPARKS NEVADA 89436

Job No: 22-043

Owner

CITY OF SPARKS

BID SET

REVISIONS		
REV	DATE	DESCRIPTION

Sheet Title

OVERALL FLOOR PLAN

Date: JANUARY 4, 2024

Sheet No:

A1.01

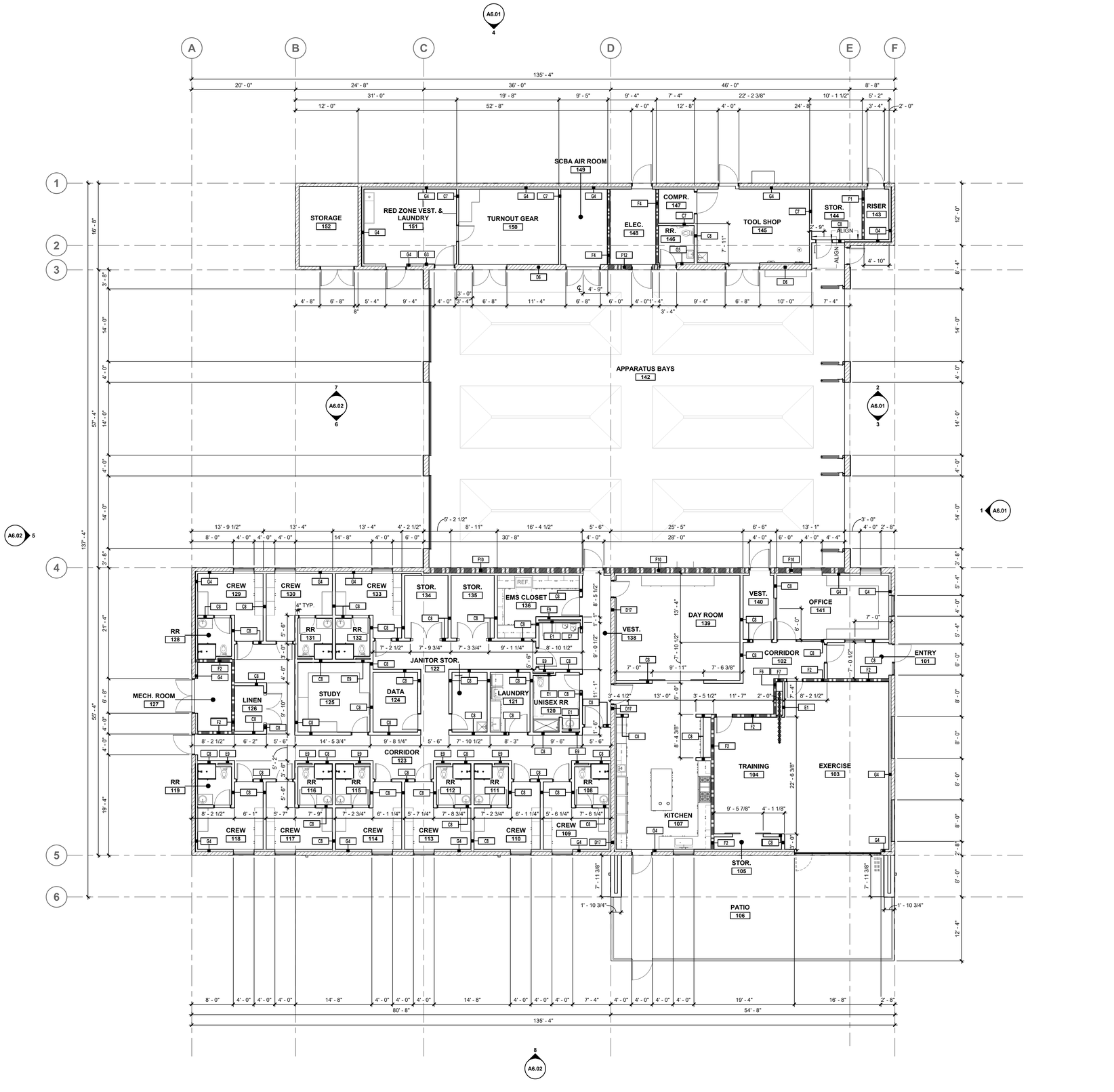

1 DIMENSION PLAN
SCALE: 1/8" = 1'-0"

NORTH

0' 4' 8' 16'

GENERAL NOTES

1. ALL DIMENSIONS ARE TAKEN FROM FACE OF STUD, MASONRY, CONCRETE, OR CENTERLINE OF COLUMN UNLESS NOTED OTHERWISE.
2. REFER TO ENLARGED RESTROOM PLANS FOR DIMENSIONS NOT SHOWN ON THE DIMENSION PLAN.
3. REFER TO SHEET A2.31 FOR PARTITION TYPES.
4. WHERE INTERIOR DOOR OPENINGS ARE NOT DIMENSIONED, INSTALL HINGE SIDE OF JAMB 6" FROM ADJACENT WALL, TYPICAL.
5. CONTRACTOR TO INSTALL ABUSE RESISTANT GYPSUM BOARD UP TO 6'-0" MINIMUM FROM FINISH FLOOR AT ALL CORRIDORS.
6. CONTRACTOR TO FIELD VERIFY ALL DIMENSIONS AND OPENINGS PRIOR TO INSTALLATION OF DOORS AND WINDOWS, ETC.
7. ALL CREW RESTROOMS (RR XXX) DOORS TO BE INSTALLED 4" BUTT SIDE OF JAMB FROM ADJACENT WALL

KEYNOTES

tsk

225 South Arlington Avenue,
Suite A
Reno NV, 89501
phone: 775.857.2949
fax: 775.857.2403
www.tska.com

KOLBY M HARPSTEAD
REGISTERED
No. 8775
01/04/2024
ARCHITECT
STATE OF NEVADA

THESE DRAWINGS AND SPECIFICATIONS ARE THE PROPERTY OF TATE SNYDER KIMSEY ARCHITECTS AND MAY NOT BE REPRODUCED OR USED FOR ANY PURPOSE WITHOUT THE ARCHITECTS WRITTEN CONSENT. AS INSTRUMENTS OF SERVICE, THESE DOCUMENTS ARE NOT FINAL AND READY FOR USE, AND THEREFORE NOT VALID, UNLESS THEY ARE SEALED, SIGNED AND DATED.

Copyright, Ltd 2024

Consultant

PLEASE RECYCLE

Project

SPARKS Fire Station #6

6963 SCHEIDBAR ROAD, SPARKS NEVADA 89436

Job No: 22-043

Owner

CITY OF SPARKS

CITY OF SPARKS FIRE DEPARTMENT Est. 1905

BID SET

REVISIONS		
REV	DATE	DESCRIPTION

Sheet Title

DIMENSION PLAN

Date: JANUARY 4, 2024

Sheet No:

A1.11

TOILET ACCESSORIES SCHEDULE				
SYMBOL	DESCRIPTION	MANUFACTURER (BASIS OF DESIGN)	MFR NO.	PROVIDED/INSTALLED
TA-1	Contura Series Surface Mounted Soap Dispenser	Bobrick Washroom Equipment, Inc.	B-4112	
TA-2	Glass Mirror with Stainless Steel Angle Frame	Bobrick Washroom Equipment, Inc.	B-165 Series	
TA-3	Classic Series Surface Mounted Seat Cover Dispenser	Bobrick Washroom Equipment, Inc.	B-221	
TA-4	1 1/4" Diameter Stainless Steel Grab Bars with Snap Flange	Bobrick Washroom Equipment, Inc.	B-5806 Series	
TA-5	1 1/4" Diameter Stainless Steel Grab Bars with Snap Flange	Bobrick Washroom Equipment, Inc.	B-5806 Series	
TA-6	1 1/4" Diameter Stainless Steel Grab Bars with Snap Flange	Bobrick Washroom Equipment, Inc.	B-5806 Series	
TA-7	Surface-Mounted Multi-Roll Toilet Tissue Dispenser	Bobrick Washroom Equipment, Inc.	B-2888	
TA-8	Surface-Mounted Sanitary Napkin Disposal	Bobrick Washroom Equipment, Inc.	B-270	
TA-9	Single-Roll Toilet Tissue Dispenser	Bobrick Washroom Equipment, Inc.	B-2730	
TA-10	Stainless Steel Mop and Broom Holder	Bobrick Washroom Equipment, Inc.	B-223	
TA-11	Paper Towel Dispenser And Waste Receptacle - Semi-Recessed	Bobrick Washroom Equipment, Inc.	B-38032	
TA-12	Baby Changing Station	Bobrick Washroom Equipment Inc.,	KB200-11	

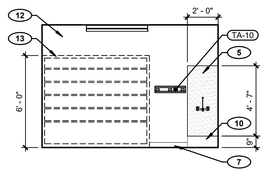

4B JANITOR STORAGE 122 - EAST
SCALE: 1/4" = 1'-0"

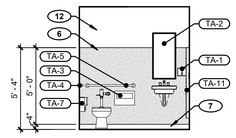

3D RESTROOM 146 - EAST
SCALE: 1/4" = 1'-0"

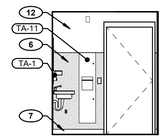

3C RESTROOM 146 - SOUTH
SCALE: 1/4" = 1'-0"

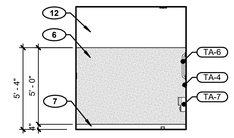

3B RESTROOM 146 - WEST
SCALE: 1/4" = 1'-0"

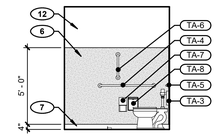

3A RESTROOM 146 - NORTH
SCALE: 1/4" = 1'-0"

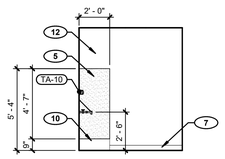

4A JANITOR STORAGE 122 - SOUTH
SCALE: 1/4" = 1'-0"

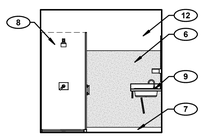

2D TYPICAL CREW RESTROOM - EAST
SCALE: 1/4" = 1'-0"

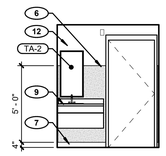

2C TYPICAL CREW RESTROOM - SOUTH
SCALE: 1/4" = 1'-0"

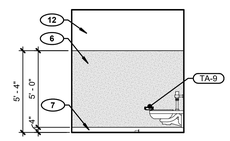

2B TYPICAL CREW RESTROOM - WEST
SCALE: 1/4" = 1'-0"

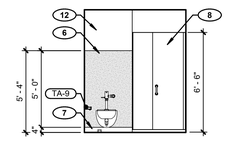

2A TYPICAL CREW RESTROOM - NORTH
SCALE: 1/4" = 1'-0"

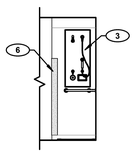

1F UNISEX RESTROOM 120 - WING WALL EAST
SCALE: 1/4" = 1'-0"

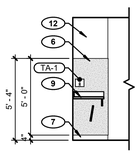

1E UNISEX RESTROOM 120 - WING WALL WEST
SCALE: 1/4" = 1'-0"

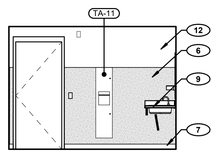

1D UNISEX RESTROOM 120 - EAST
SCALE: 1/4" = 1'-0"

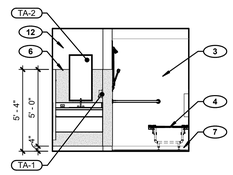

1C UNISEX RESTROOM 120 - SOUTH
SCALE: 1/4" = 1'-0"

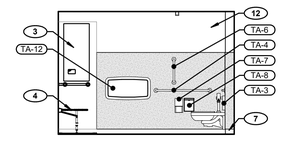

1B UNISEX RESTROOM 120 - WEST
SCALE: 1/4" = 1'-0"

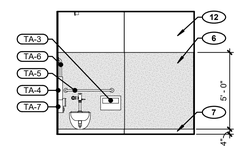

1A UNISEX RESTROOM 120 - NORTH
SCALE: 1/4" = 1'-0"

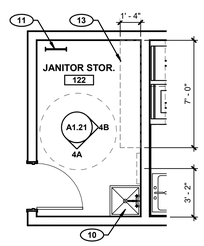

F ENLARGED PLAN - JANITOR STORAGE 122
SCALE: 1/4" = 1'-0"

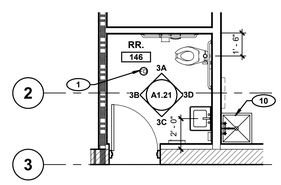

D ENLARGED PLAN - RESTROOM 146
SCALE: 1/4" = 1'-0"

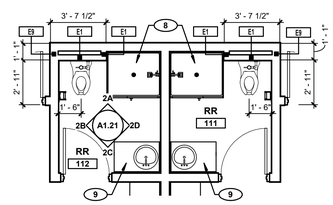

B ENLARGED PLAN - TYPICAL CREW RESTROOM
SCALE: 1/4" = 1'-0"

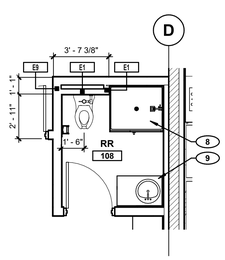

E ENLARGED PLAN - CREW RESTROOM 108
SCALE: 1/4" = 1'-0"

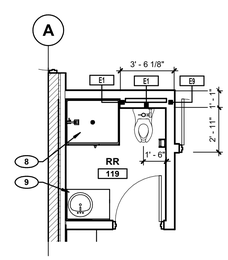

C ENLARGED PLAN - CREW RESTROOM 119 / CREW RESTROOM 128 SIMILAR
SCALE: 1/4" = 1'-0"

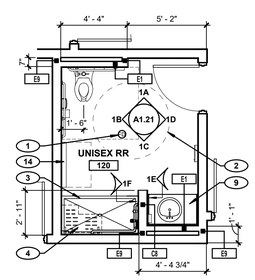

A ENLARGED PLAN - UNISEX RESTROOM 120
SCALE: 1/4" = 1'-0"

GENERAL NOTES

1. REFER TO GENERAL ACCESSIBILITY DETAILS IN G1.0X SERIES FOR TYPICAL ACCESSIBLE FIXTURE, GRAB BAR AND ACCESSORY MOUNTING HEIGHTS AND LOCATIONS.
2. REFER TO SHEET A2.01 FOR ROOM FINISH SCHEDULE AND MATERIAL SCHEDULE
3. REFER TO DIMENSION PLAN FOR WALL PARTITION TYPES. REFER TO SHEET A2.35 FOR PARTITION DETAILS.
4. REFER TO A8.XX SERIES FOR CASEWORK PLANS AND ELEVATIONS.
5. FURNITURE SHOWN FOR REFERENCE ONLY. FURNITURE NOT IN CONTRACT.
6. FD - FLOOR DRAINS TO SLOPE 1/8" PER FOOT.
7. "ACC" DENOTES AN ACCESSIBLE FIXTURE. REFER TO SHEET G1.03.
8. METAL WALL BACKING TO BE PROVIDED FOR ALL WALL MOUNTED EQUIPMENT.

KEYNOTES

1. FLOOR DRAIN, REFER TO PLUMBING DRAWINGS
2. 5'-0" ACCESSIBLE TURN RADIUS, TYPICAL
3. ADA COMPLIANT ROLL-IN SHOWER KIT, REFER TO PLUMBING DRAWINGS
4. ADA SHOWER BENCH, REFER TO PLUMBING DRAWINGS
5. FRP - FIBER REINFORCED PANEL (W-3), REFER TO MATERIAL SCHEDULE
6. FRL - FIBER REINFORCED LAMINATE (W-4), REFER TO MATERIAL SCHEDULE
7. 4" RESINOUS FLOOR COVE BASE (B-2), REFER TO MATERIAL SCHEDULE
8. PRE-FABRICATED SHOWER UNIT
9. SOLID SURFACE COUNTERTOP WITH BACKSPLASH, (ML-1)
10. MOP SINK, REFER TO PLUMBING DRAWINGS
11. ROOF ACCESS LADDER (PC-3), REFER TO ROOF DETAILS
12. PAINTED GYPSUM BOARD, REFER TO ROOM FINISH SCHEDULE
13. FURNITURE (SHOWN DASHED), REFER TO FURNITURE AND EQUIPMENT PLAN
14. BABY CHANGING STATION, REFER TO TOILET ACCESSORIES SCHEDULE

tsk

225 South Arlington Avenue,
Suite A
Reno NV, 89501
phone: 775.857.2949
fax: 775.857.2403
www.tska.com

THESE DRAWINGS AND SPECIFICATIONS ARE THE PROPERTY OF TATE SNYDER KIMSEY ARCHITECTS AND MAY NOT BE REPRODUCED OR USED FOR ANY PURPOSE WITHOUT THE ARCHITECTS WRITTEN CONSENT. AS INSTRUMENTS OF SERVICE, THESE DOCUMENTS ARE NOT FINAL AND READY FOR USE, AND THEREFORE NOT VALID, UNLESS THEY ARE SEALED, SIGNED AND DATED.

Copyright, Ltd 2024

Consultant

PLEASE RECYCLE

Project

SPARKS Fire Station #6

6963 SCHEIDBAR ROAD, SPARKS NEVADA 89436

Job No: 22-043

Owner

CITY OF SPARKS

BID SET

REVISIONS		
REV	DATE	DESCRIPTION
A	05.18.23	Review Comments

Sheet Title

ENLARGED PLANS AND ELEVATIONS

Date: JANUARY 4, 2024

Sheet No:

A1.21

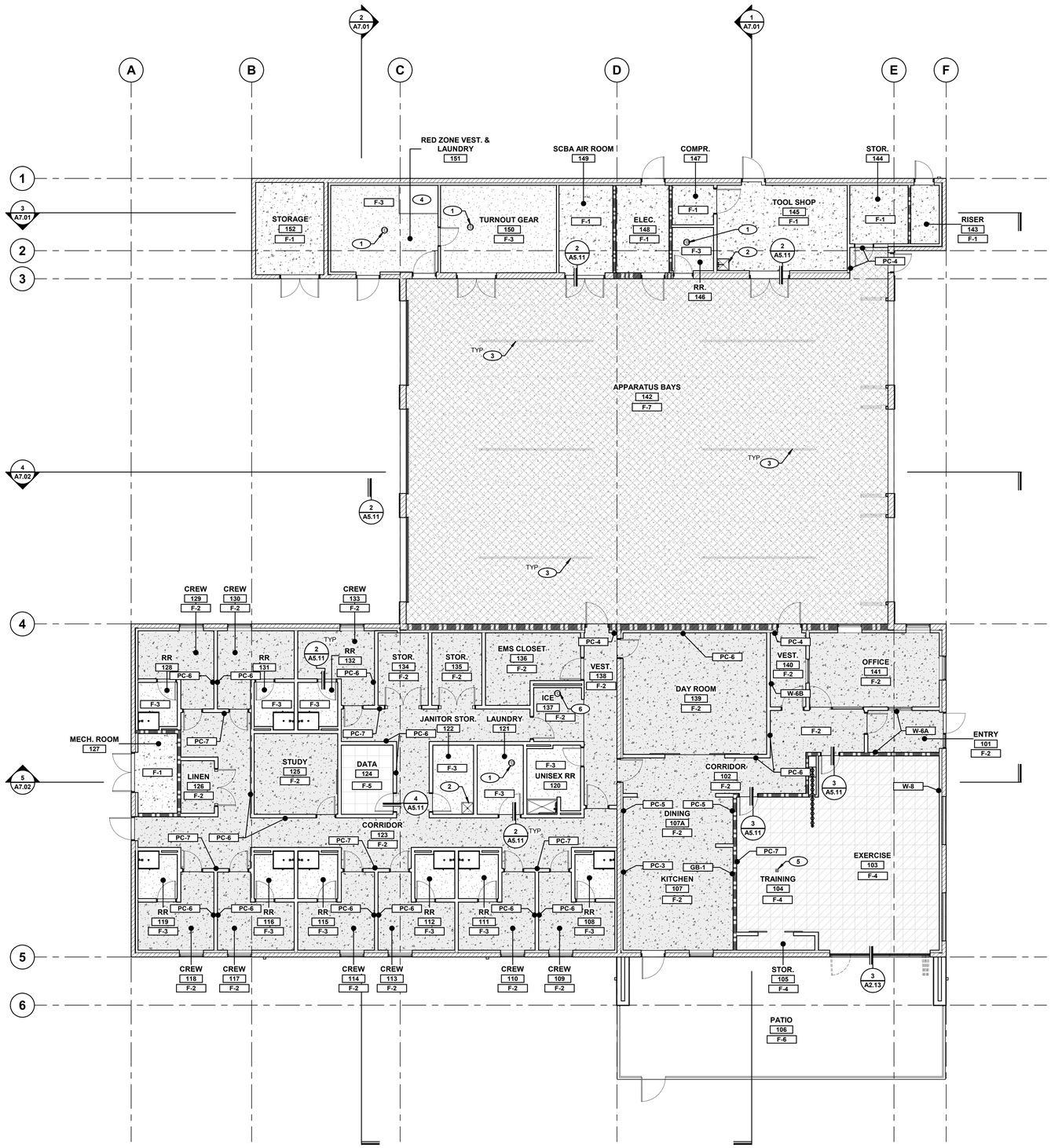

1 FLOOR FINISH PLAN
SCALE: 1/8" = 1'-0"

GENERAL NOTES

1. ALL DIMENSIONS ARE TAKEN FROM GRIDLINES, FACE OF STUD, MASONRY OR CONCRETE UNLESS NOTED OTHERWISE.
2. REFER TO SHEET A2.01 FOR ROOM FINISH SCHEDULE AND MATERIAL SCHEDULE.
3. CORNERGUARD CG-1 ON EVERY WALL OUTSIDE CORNER, UNLESS NOTED OTHERWISE.
4. REFER TO A8.XX SERIES FOR CASEWORK PLANS AND ELEVATIONS.
5. REFER TO A2.4X SERIES FOR INTERIOR DETAILS.

KEYNOTES

1. FLOOR DRAIN, REFER TO PLUMBING DRAWINGS
2. MOP SINK, REFER TO PLUMBING DRAWINGS
3. LINEAR TRENCH DRAIN, REFER TO PLUMBING DRAWINGS
4. RAISED SLAB, REFER TO STRUCTURAL DRAWINGS
5. ELECTRICAL/DATA FLOOR BOX, REFER TO ELECTRICAL DRAWINGS
6. FLOOR SINK REFER TO PLUMBING DRAWINGS

LEGEND

- SEALED CONCRETE **F-1**
- POLISHED & SEALED CONCRETE **F-2**
- RESINOUS EPOXY FLOORING **F-3**
- RUBBER GYM FLOORING **F-4**
- STATIC DISSIPATIVE VCT **F-5**
- EXTERIOR SEALED BROOM FINISHED CONCRETE **F-6**
- RESINOUS EPOXY FLOORING @ APPARATUS BAY **F-7**

tsk

225 South Arlington Avenue,
Suite A
Reno NV, 89501
phone: 775.857.2949
fax: 775.857.2403
www.tska.com

KOLBY M HARPSTEAD
REGISTERED
No. 8775
01/04/2024
ARCHITECT
STATE OF NEVADA

THESE DRAWINGS AND SPECIFICATIONS ARE THE PROPERTY OF TATE SNYDER KIMSEY ARCHITECTS AND MAY NOT BE REPRODUCED OR USED FOR ANY PURPOSE WITHOUT THE ARCHITECTS WRITTEN CONSENT. AS INSTRUMENTS OF SERVICE, THESE DOCUMENTS ARE NOT FINAL AND READY FOR USE, AND THEREFORE NOT VALID, UNLESS THEY ARE SEALED, SIGNED AND DATED.

Copyright, Ltd 2024

Consultant

PLEASE RECYCLE

Project
SPARKS Fire Station #6

6963 SCHEIDBAR ROAD, SPARKS NEVADA 89436

Job No: 22-043

Owner
CITY OF SPARKS

CITY OF SPARKS FIRE DEPARTMENT Est. 1905

BID SET

REVISIONS		
REV	DATE	DESCRIPTION

Sheet Title
FLOOR FINISH PLAN

Date: JANUARY 4, 2024
Sheet No:
A1.31

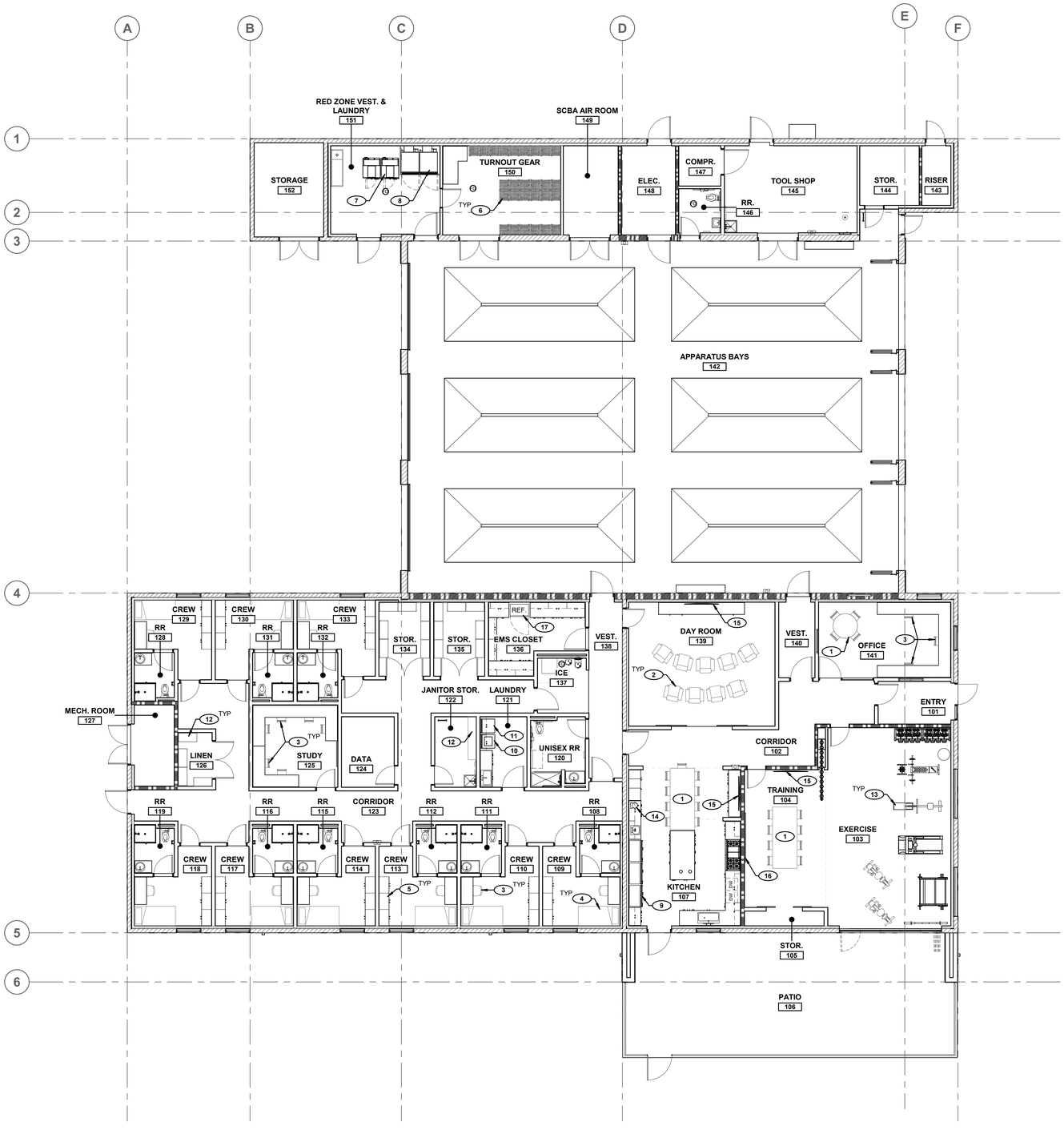

1 FURNITURE PLAN
SCALE: 1/8" = 1'-0"

NORTH 0' 4' 8' 16'

GENERAL NOTES

1. ALL FURNITURE IS SHOWN FOR REFERENCE ONLY. FURNITURE WILL BE O.F.O.I.
2. REFER TO SHEET A2.01 FOR ROOM FINISH SCHEDULE AND MATERIAL SCHEDULE.
3. FURNITURE TO COMPLY WITH DETAILS ON THE GENERAL ACCESSIBILITY DETAILS SHEETS, UNLESS NOTED OTHERWISE.
4. ALL CONSTRUCTION SHALL CONFORM TO THE CODES LISTED IN THE CODE ANALYSIS.

KEYNOTES

#	DESCRIPTION	O.F.O.I.	O.F.C.I.	O.F.C.I.
1	C.O.S. MODULAR FURNITURE, TYPICAL	■		
2	DAY ROOM LOUNGE / RECLINER CHAIR	■		
3	OFFICE / DESK CHAIR	■		
4	STANDARD TWIN BED, TYPICAL	■		
5	CREW LOCKER, TYPICAL	■		
6	STANDARD WIRE MESH LOCKER	■		
7	INDUSTRIAL WASHER - UniMac			■
8	INDUSTRIAL DRYER / TUMBLER - UniMac			■
9	SUBZERO REFRIGERATOR			■
10	STANDARD CLOTHES WASHER			■
11	STANDARD CLOTHES DRYER			■
12	STORAGE SHELVING			■
13	EXERCISE EQUIPMENT	■		
14	COFFEE MAKER	■		
15	TV MONITOR			■
16	4' x 8' MARKER BOARD	■		
17	REFRIGERATOR			■

tsk
225 South Arlington Avenue,
Suite A
Reno NV, 89501
phone: 775.857.2949
fax: 775.857.2403
www.tska.com

KOLBY M HARPSTEAD
REGISTERED
No. 8775
01/04/2024
ARCHITECT
STATE OF NEVADA

THESE DRAWINGS AND SPECIFICATIONS ARE THE PROPERTY OF TATE SNYDER KIMSEY ARCHITECTS AND MAY NOT BE REPRODUCED OR USED FOR ANY PURPOSE WITHOUT THE ARCHITECTS WRITTEN CONSENT. AS INSTRUMENTS OF SERVICE, THESE DOCUMENTS ARE NOT FINAL AND READY FOR USE, AND THEREFORE NOT VALID, UNLESS THEY ARE SEALED, SIGNED AND DATED.

Copyright, Ltd 2024

Consultant

PLEASE RECYCLE

Project
SPARKS Fire Station #6

6963 SCHEIDBAR ROAD, SPARKS NEVADA 89436

Job No: 22-043

Owner
CITY OF SPARKS

BID SET

REVISIONS		
REV	DATE	DESCRIPTION

Sheet Title
FURNITURE AND EQUIPMENT PLAN

Date: JANUARY 4, 2024
Sheet No:
A1.41

ROOM FINISH SCHEDULE

ROOM NO	ROOM NAME	FLOORING MATERIAL	FLOORING BASE	CEILING MATERIAL	WALLS (ORIENTATION IS BASED ON PROJECT NORTH) NORTH MATERIAL	WEST MATERIAL	SOUTH MATERIAL	EAST MATERIAL	COMMENTS
LEVEL 1									
101	ENTRY	F-2	B-1	C-4	W-6	W-2	W-6	W-2	PC-1 @ WALLS ABOVE STOREFRONT
102	CORRIDOR	F-2	B-1	C-1	W-1/PC-1	W-1/PC-1	W-1/PC-1	W-1/PC-1	PC-6 @ ACCENT WALL, REFER TO A1.31
103	EXERCISE	F-4	B-1	C-5	W-1/PC-1	W-1/W-7	W-1/PC-1	W-8/PC-1	REFER TO INTERIOR ELEVATION 4/A5.02
104	TRAINING	F-4	B-1	C-2	W-1/PC-1	W-1/PC-7	W-1/PC-1	W-1/W-7	
105	STOR.	F-4	B-1	C-4	W-1/PC-1	W-1/PC-1	W-1/PC-1	W-1/PC-1	
106	PATIO	F-6	N/A	RS-2	CMU-1	RS-1	-	RS-1	
107	KITCHEN	F-2	B-1	C-4	W-1/PC-1	W-1/PC-3	W-1/PC-1	W-1/GB-1	PC-1 @ WALLS ABOVE
107A	DINING	F-2	B-1	C-3	W-1/PC-1	W-1/PC-5	W-1/PC-1	W-1/PC-5	
108	RR	F-3	B-2	C-4	W-1/W-4	W-1/W-4	W-1/W-4	W-1/W-4	PC-7 @ ALL WALLS ABOVE W-4
109	CREW	F-2	B-1	C-1	W-1	W-1	W-1/W-4	W-1/W-4	
110	CREW	F-2	B-1	C-1	W-1	W-1/W-4	W-1/W-4	W-1	
111	RR	F-3	B-2	C-4	W-1/W-4	W-1/W-4	W-1/W-4	W-1/W-4	PC-7 @ ALL WALLS ABOVE W-4
112	RR	F-3	B-2	C-4	W-1/W-4	W-1/W-4	W-1/W-4	W-1/W-4	PC-7 @ ALL WALLS ABOVE W-4
113	CREW	F-2	B-1	C-1	W-1	W-1	W-1/W-4	W-1/W-4	
114	CREW	F-2	B-1	C-1	W-1	W-1/W-4	W-1/W-4	W-1	
115	RR	F-3	B-2	C-4	W-1/W-4	W-1/W-4	W-1/W-4	W-1/W-4	PC-7 @ ALL WALLS ABOVE W-4
116	RR	F-3	B-2	C-4	W-1/W-4	W-1/W-4	W-1/W-4	W-1/W-4	PC-7 @ ALL WALLS ABOVE W-4
117	CREW	F-2	B-1	C-1	W-1	W-1	W-1/W-4	W-1/W-4	
118	CREW	F-2	B-1	C-1	W-1	W-1/W-4	W-1/W-4	W-1	
119	RR	F-3	B-2	C-4	W-1/W-4	W-1/W-4	W-1/W-4	W-1/W-4	PC-7 @ ALL WALLS ABOVE W-4
120	UNISEX RR	F-3	B-2	C-4	W-1/W-4	W-1/W-4	W-1/W-4	W-1/W-4	PC-7 @ ALL WALLS ABOVE W-4
121	LAUNDRY	F-3	B-2	C-4	W-1/PC-1	W-1/PC-1	W-1/PC-1	W-1/PC-1	
122	JANITOR STOR.	F-3	B-2	C-4	W-1/PC-1	W-1/PC-1	W-1/W-3	W-1/W-3	REFER TO INTERIOR ELEVATIONS FOR W-3 LOCATION
123	CORRIDOR	F-2	B-1	C-1	W-1/PC-6/PC-7	W-1/PC-1	W-1/PC-6/PC-7	W-1/PC-1	REFER TO SHEET A1.31 FOR ACCENT WALL LOCATIONS
124	DATA	F-5	B-1	C-5	PC-1/W-5	PC-1/W-5	PC-1/W-5	PC-1/W-5	
125	STUDY	F-2	B-1	C-1	W-1/PC-5	W-1/PC-5	W-1/PC-5	W-1/PC-5	PC-5 @ ALL WALLS
126	LINEN	F-2	B-1	C-4	W-1/PC-1	W-1/PC-1	W-1/PC-1	W-1/PC-1	
127	MECH. ROOM	F-1	B-1	C-5	W-1/PC-1	W-1/PC-1	W-1/PC-1	W-1/PC-1	
128	RR	F-3	B-2	C-4	W-1/W-4	W-1/W-4	W-1/W-4	W-1/W-4	PC-7 @ ALL WALLS ABOVE W-4
129	CREW	F-2	B-1	C-1	W-1/W-4	W-1/W-4	W-1	W-1	
130	CREW	F-2	B-1	C-1	W-1/W-4	W-1	W-1	W-1/W-4	
131	RR	F-3	B-2	C-4	W-1/W-4	W-1/W-4	W-1/W-4	W-1/W-4	PC-7 @ ALL WALLS ABOVE W-4
132	RR	F-3	B-2	C-4	W-1/W-4	W-1/W-4	W-1/W-4	W-1/W-4	PC-7 @ ALL WALLS ABOVE W-4
133	CREW	F-2	B-1	C-1	W-1/W-4	W-1/W-4	W-1	W-1	
134	STOR.	F-2	B-1	C-4	W-1/PC-1	W-1/PC-1	W-1	W-1	
135	STOR.	F-2	B-1	C-4	W-1/PC-1	W-1/PC-1	W-1/PC-1	W-1/PC-1	
136	EMS CLOSET	F-2	B-1	C-2	W-1/PC-1	W-1/PC-1	W-1/PC-1	W-1/PC-1	
137	ICE	F-2	B-1	C-4	W-1/W-3	W-1/W-3	W-1/PC-1	W-1/PC-1	
138	VEST.	F-2	B-1	C-4	W-1/PC-4	W-1/PC-1	W-1/PC-1	CMU-1	
139	DAY ROOM	F-2	B-1	C-1	W-1/PC-6	W-1/PC-1	W-1/PC-1	W-1/PC-1	
140	VEST.	F-2	B-1	C-4	W-1/PC-4	W-6	W-1/PC-1	W-1/PC-1	
141	OFFICE	F-2	B-1	C-1	W-1	W-1/PC-1	W-1/W-2	W-1/PC-1	PC-1 @ WALLS ABOVE STOREFRONT
142	APPARATUS BAYS	F-1	B-3	C-5	CMU-2/PC-4	CMU-2	CMU-1	CMU-2	WITH MASONRY WALL SEALER; PC-4 ON NE CORNER, SEE A1.31
143	RISER	F-1	B-1	C-5	W-1/PC-1	W-1/PC-1	W-1/PC-1	W-1/PC-1	
144	STOR.	F-1	B-2	C-5	W-1/PC-1	W-1/PC-1	W-1/PC-1	W-1/PC-1	
145	TOOL SHOP	F-1	B-2	C-4	W-1/PC-1	W-1/W-3	W-1/W-3	W-1/PC-1	REFER TO INTERIOR ELEVATIONS FOR W-3 LOCATION
146	RR.	F-3	B-2	C-4	W-1/W-4	W-1/W-4	W-1/W-4	W-1/W-4	PC-7 @ ALL WALLS ABOVE W-4
147	COMPR.	F-1	B-1	C-5	W-1/PC-1	W-1/PC-1	W-1/PC-1	W-1/PC-1	
148	ELEC.	F-1	B-1	C-5	W-1/PC-1	W-1/PC-1	W-1/PC-1	W-1/PC-1	
149	SCBA AIR ROOM	F-1	B-1	C-5	W-1/PC-1	W-1/PC-1	W-1/PC-1	W-1/PC-1	
150	TURNOUT GEAR	F-3	B-2	C-4	W-1/PC-7	W-1/PC-7	W-1/PC-7	W-1/PC-7	PC-7 @ ALL WALLS
151	RED ZONE VEST. & LAUNDRY	F-3	B-2	C-4	W-1/W-3	W-1/W-3	W-1/W-3	W-1/W-3	PC-7 @ ALL WALLS ABOVE W-3
152	STORAGE	F-1	B-1	C-5	CMU-2	CMU-2	CMU-2	CMU-2	

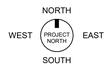

BUILDING MATERIAL SCHEDULE - INTERIOR

KEY	DESCRIPTION	MANUFACTURER (BASIS OF DESIGN)	MODEL NUMBER	COLOR	REMARKS
BASE					
B-1	RUBBER WALL BASE	TARKETT	MANDALAY 4-1/2" MW 168 H	168 THUNDER	
B-2	RESINOUS EPOXY COVE BASE	FLOWCRETE	PERAN FLOOR FLAKES 4"	DOMINO	
B-3	RESINOUS EPOXY COVE BASE	ELITE CRETE SYSTEMS	HERMETIC FIRE APPARATUS FLOORING SYSTEM	DARK GRAY	@ APPARATUS BAYS
CEILING					
C-1	ACOUSTICAL CEILING TILE	USG	24" x 24" x 1" HALCYON #98221 LAY-IN SQUARE EDGE	WHITE PANEL / WHITE GRID	15/16" DONN DX GRID, SQ. EDGE
C-2	ACOUSTICAL CEILING TILE	USG	24" x 48" x 5/8" CLEAN ROOM PANELS #56091 NON-PERF LAY-IN	WHITE PANEL / WHITE GRID	15/16" DONN DX GRID, SQ. EDGE
C-3	LINEAR METAL CEILING SYSTEM	USG	LINEAR BARZ OPEN PLENUM MODULAR SYSTEM	SARANTE- S-37 DARK JATOBA	WITH INTEGRATED BRILLIANCE LIGHTING
C-4	PAINTED GYPSUM BOARD			PC-2, U.N.O. - SEE RCP.	
C-5	OPEN TO STRUCTURE			PC-2, U.N.O. - SEE RCP.	
CORNER GUARDS					
CG-1	CORNER GUARD	CS GROUP - ACROVYN	CO-8	STAINLESS STEEL	@ ALL OUTSIDE CORNERS
COUNTERTOP					
ML-1	SOLID SURFACE	CORIAN	3/4" QUARTZ	SPARKLING GRANITA	@ BATHROOMS
ML-2	STAINLESS STEEL			STAINLESS STEEL	@ KITCHEN & WASHROOMS, FULL-HEIGHT BACKSPLASH, MARINE EDGE, WELDED SEAM
ML-3	GALVANIZED STEEL				@ SHOP, WELDED SEAMS
ML-4	SOLID COMPOSITE			TBD	@ RESTROOM & KITCHEN
FLOORING					
F-1	SEALED CONCRETE				SEE FLOOR FINISH PLANS
F-2	POLISHED & SEALED CONCRETE				SEE FLOOR FINISH PLANS & SPECIFICATION
F-3	RESINOUS EPOXY FLOORING	FLOWCRETE	PERAN FLOOR FLAKES 4"	DOMINO	SMOOTH UNDER KITCHEN EQUIPMENT
F-4	RUBBER GYM FLOORING	AMERICAN FLOOR MATS	2' x 2' x 1" THICK, EXTREME RUBBER GYM TILES	SOLID BLACK	@ EXERCISE & TRAINING ROOMS
F-5	STATIC DISSIPATIVE VCT	TARKETT	PRIMO SD TILE - STATIC CONTROL	DARK COOL GRAY 0563	@ DATA ROOM
F-6	EXTERIOR SEALED BROOM FINISHED CONCRETE				@ PATIO
F-7	RESINOUS EPOXY FLOORING	ELITE CRETE SYSTEMS	HERMETIC FIRE APPARATUS FLOORING SYSTEM	DARK GRAY	@ APPARATUS BAYS
GLASS BACKSPLASH					
GB-1	COLOR GLASS BACKSPLASH	GARDNER GLASS	DREAM WALLS	COLOR TO MATCH PC-3	OUTLET COLORS TO MATCH, PROVIDE DEEPER RECEPTACLE
PLASTIC LAMINATE					
PL-1	PLASTIC LAMINATE - HIGH PRESSURE	FORMICA	COMMERCIAL LAMINATE (4'-0" x 10'-0") INFINITI (AN)	912 STORM	
PL-2	PLASTIC LAMINATE - HIGH PRESSURE	FORMICA	COMMERCIAL LAMINATE	8865 CHARCOAL CERISE	@ CREW ROOM ARMOIRES
WALLS					
W-1	PAINTED GYPSUM BOARD				SEE PAINT COLOR SCHEDULE, FINISH PLANS, AND INTERIOR ELEVATIONS. ABUSE RESISTANT UP TO 6FT. A.F.F. IN CORRIDORS.
W-2	STOREFRONT			ANODIZED ALUMINUM	
W-3	FIBER REINFORCED PANEL (FRP)	PANOLAM		WHITE	
W-4	FIBER REINFORCED LAMINATE (FRL)	PANOLAM	PIONITE FA578 (5'-0 x 10'-0") (SD)	STARGAZING	FLAT TRIM PIECES (ANODIZED)
W-5	PLYWOOD BACKBOARD				@ DATA ROOM
W-6	LEVEL-5 FINISH GYPSUM BOARD WALL		VINYL GRAPHIC LOCATION		SEE VINYL GRAPHIC SCHEDLUE & DIGITAL GRAPHICS SPECIFICATION
W-7	OPERABLE ACOUSTIC PARTITION	MODERNFOLD	ENCORE - SINGLE PANEL, ACOUSTI-SEAL (TBD)	KS - DESCENT - 461	@ EXERCISE & TRAINING ROOMS
W-8	RESILIENT ATHLETIC WALL PANEL	FUNDERMAX	GR 110 1/4" X 51 3/16" MT FINISH	0162 AF SAHARA	@ EXERCISE ROOM
WINDOW COVERINGS					
WC-1	MECHOSHADE DOUBLE-SHADE SYSTEM	MECHO/5 SYSTEM	MECHO/5 SYSTEM (MANUAL)	1116 SLATE - 5% OPEN - 1351 - WHITE	W/ BLACKOUT OPTION

BUILDING MATERIAL SCHEDULE - EXTERIOR

KEY	DESCRIPTION	MANUFACTURER (BASIS OF DESIGN)	MODEL NUMBER	COLOR	REMARKS
CMU					
CMU-1	CONCRETE MASONRY UNITS	BASALITE	296 - GROUND FACE	LIGHT GREEN	
CMU-2	CONCRETE MASONRY UNITS	BASALITE	125B - GROUND FACE	BEIGE	
CMU-3	CONCRETE MASONRY UNITS	BASALITE	PRECISION CONCRETE MASONRY UNITS	GREY	
EXTERIOR INSULATION FINISH SYSTEM					
CS-1	EXTERIOR INSULATION FINISH SYSTEM	DRYVIT	SANDBLAST	COLOR TO MATCH PC-2	SEE EXTERIOR ELEVATIONS
METAL COPING					
CP-1	METAL COPING	HICKMAN	PERMASNAP COPING	CHARCOAL (CHARCOAL GRAY)	SEE EXTERIOR ELEVATIONS
PERFORATED METAL PANEL					
CM-1	PERFORATED METAL PANEL	MORIN	VB-36 PROFILE B STANDARD PERFORATIONS, 30% OPEN (1/8" HOLE, 7/32" SPACING)	PAINT TO MATCH PC-3	@ ENTRY CANOPY, SHADE ELEMENTS, TRASH ENCLOSURE
RAINSCREEN SYSTEM - CORRUGATED METAL PANEL					
RS-1	CORRUGATED METAL PANEL	MORIN	EXPOSED C-29 PROFILE A	CHROMIUM GRAY	SEE EXTERIOR ELEVATIONS
RAINSCREEN SYSTEM - PHENOLIC					
RS-2	COMPACT EXTERIOR PHENOLIC PANELS	FUNDERMAX	MAX COMPACT EXTERIOR	TYROL PINE 0803 (NT)	SEE RCP DRAWINGS

PAINT/STAIN COLOR SCHEDULE

KEY	DESCRIPTION	COLOR	LOCATION	SHEEN
PC-1	WHITE	SW 7757 HIGHLY REFLECTIVE WHITE	INTERIOR GYP. BOARD WALLS (FIELD), OUTLETS & FACEPLATES TO MATCH	
PC-2	WHITE	SW 7007 CEILING BRIGHT WHITE	INTERIOR GYP. BOARD CEILINGS, EXPOSED STRUCTURE, INTERIOR DUCTWORK & HVAC GRILLES, U.N.O. EXTERIOR SOFFITS	
PC-3	DARK GRAY	SW 7674 PEPPERCORN	METAL DOORS, METAL DOOR FRAMES, BOLLARDS, TRASH ENCLOSURE, ACCESS LADDERS	
PC-4	RED	SW 6868 REAL RED	ACCENT COLOR @ ENTRY & APPARATUS DOOR OPENING SURROUNDS	
PC-5	NEUTRAL GRAY	SW 7024 FUNCTIONAL GRAY	INTERIOR GYP. (ACCENT)	
PC-6	BLUE	SW6221 MOODY BLUE	INTERIOR GYP. (ACCENT)	
PC-7	LIGHT GRAY	SW 9561 GUILD GRAY	INTERIOR GYP. (ACCENT)	
ST-1	STAINED WOOD DOORS	STOUT	INTERIOR WOOD DOORS	

VINYL GRAPHIC SCHEDULE

KEY	STYLE	LOCATION	NOTES
W-6A			
W-6B			

tsk

225 South Arlington Avenue,
Suite A
Reno NV, 89501
phone: 775.857.2949
fax: 775.857.2403
www.tska.com

THESE DRAWINGS AND SPECIFICATIONS ARE THE PROPERTY OF TATE SNYDER KIMSEY ARCHITECTS AND MAY NOT BE REPRODUCED OR USED FOR ANY PURPOSE WITHOUT THE ARCHITECTS WRITTEN CONSENT. AS INSTRUMENTS OF SERVICE, THESE DOCUMENTS ARE NOT FINAL AND READY FOR USE, AND THEREFORE NOT VALID, UNLESS THEY ARE SEALED, SIGNED AND DATED.

Copyright, Ltd 2024

Consultant

PLEASE RECYCLE

Project

SPARKS Fire Station #6

6963 SCHEIDBAR ROAD, SPARKS NEVADA 89436

Job No: 22-043

Owner

CITY OF SPARKS

BID SET

REVISIONS		
REV	DATE	DESCRIPTION
A	05.18.23	Review Comments

Sheet Title

BUILDING MATERIAL SCHEDULES & ROOM FINISH SCHEDULE

Date: JANUARY 4, 2024

Sheet No:

A2.01

DOOR SCHEDULE

ROOM NAME	DR. NO.	RM. NO.	PR	PANEL SIZE W	PANEL SIZE H	PANEL SIZE T	PANEL TYPE	PANEL MAT'L	FRAME TYPE	FRAME MAT'L	FRAME HEAD DTL	FRAME JAMB DTL LATCH	FRAME JAMB DTL HINGE	HDWR	LABEL	REMARKS
ENTRY	101	101		3' - 4"	7' - 8"	1 3/4"	FG	AL		AL	1/A2.12	3/A2.12	2/A2.12	01		CARD READER; COORDINATE W/ SECURITY CONTRACTOR
ENTRY	101A	101		3' - 4"	7' - 8"	1 3/4"	N	SC	1	HM	17/A2.12	18/A2.12	18/A2.12	06.2		CARD READER; COORDINATE W/ SECURITY CONTRACTOR
CORRIDOR	102	102		3' - 8"	7' - 0"	1 3/4"	N	SC	2	HM	12/A2.12	16/A2.12	16/A2.12	13		
EXERCISE	103	103		3' - 0"	7' - 0"	1 3/4"	F	SC	1	HM	17/A2.12	18/A2.12	18/A2.12	14	45 MIN.	
PATIO	103A	106		12' - 0"	8' - 0"		SD	STL/GL		STL	3/A2.13	6/A2.13	6/A2.13	15		
TRAINING	104	104		3' - 0"	7' - 0"	1 3/4"	F	SC	1	HM	17/A2.12	18/A2.12	18/A2.12	14	45 MIN.	
	104A			22' - 5"	9' - 8"		PD			-	5/A2.13	2/A2.13	2/A2.13	15		
STOR.	105A	105		6' - 0"	8' - 0"	1 3/4"	BD	SC	4	HM	19/A2.12	-	-	19		
PATIO	106	106		4' - 0"	4' - 0"	1 3/4"	SS					16/A9.01	16/A9.01	16		CARD READER; COORDINATE W/ SECURITY CONTRACTOR
KITCHEN	107	107		3' - 8"	7' - 0"	1 3/4"	N	STL	2	HM	4/A2.12	8/A2.12	8/A2.12	06.2		CARD READER; COORDINATE W/ SECURITY CONTRACTOR
RR	108	108		3' - 0"	7' - 0"	1 3/4"	F	SC	2	HM	17/A2.12	18/A2.12	18/A2.12	11		
CREW	109	109		3' - 0"	7' - 0"	1 3/4"	F	SC	2	HM	17/A2.12	18/A2.12	18/A2.12	12		
CREW	110	110		3' - 0"	7' - 0"	1 3/4"	F	SC	2	HM	17/A2.12	18/A2.12	18/A2.12	12		
RR	111	111		3' - 0"	7' - 0"	1 3/4"	F	SC	2	HM	17/A2.12	18/A2.12	18/A2.12	11		
RR	112	112		3' - 0"	7' - 0"	1 3/4"	F	SC	2	HM	17/A2.12	18/A2.12	18/A2.12	11		
CREW	113	113		3' - 0"	7' - 0"	1 3/4"	F	SC	2	HM	17/A2.12	18/A2.12	18/A2.12	12		
CREW	114	114		3' - 0"	7' - 0"	1 3/4"	F	SC	2	HM	17/A2.12	18/A2.12	18/A2.12	12		
RR	115	115		3' - 0"	7' - 0"	1 3/4"	F	SC	2	HM	17/A2.12	18/A2.12	18/A2.12	11		
RR	116	116		3' - 0"	7' - 0"	1 3/4"	F	SC	2	HM	17/A2.12	18/A2.12	18/A2.12	11		
CREW	117	117		3' - 0"	7' - 0"	1 3/4"	F	SC	2	HM	17/A2.12	18/A2.12	18/A2.12	12		
CREW	118	118		3' - 0"	7' - 0"	1 3/4"	F	SC	2	HM	17/A2.12	18/A2.12	18/A2.12	12		
RR	119	119		3' - 0"	7' - 0"	1 3/4"	F	SC	2	HM	17/A2.12	18/A2.12	18/A2.12	11		
UNISEX RR	120	120		3' - 0"	7' - 0"	1 3/4"	F	SC	2	HM	17/A2.12	18/A2.12	18/A2.12	11		
LAUNDRY	121	121		3' - 6"	7' - 0"	1 3/4"	N	SC	2	HM	17/A2.12	18/A2.12	18/A2.12	07.2		
JANITOR STOR.	122	122		3' - 0"	7' - 0"	1 3/4"	F	SC	1	HM	17/A2.12	18/A2.12	18/A2.12	08.1		
CORRIDOR	123	123		3' - 8"	7' - 8"	1 3/4"	N	STL	2	HM	4/A2.12	8/A2.12	8/A2.12	06.2		CARD READER; COORDINATE W/ SECURITY CONTRACTOR
DATA	124	124		3' - 0"	7' - 0"	1 3/4"	F	SC	1	HM	17/A2.12	18/A2.12	18/A2.12	06.1		CARD READER; COORDINATE W/ SECURITY CONTRACTOR
STUDY	125	125		3' - 0"	7' - 0"	1 3/4"	N	SC	2	HM	17/A2.12	18/A2.12	18/A2.12	08		
LINEN	126	126	■	3' - 0"	7' - 0"	1 3/4"	F	SC	4	HM	17/A2.12	18/A2.12	18/A2.12	03.1		
MECH. ROOM	127	127	■	3' - 2"	7' - 0"	1 3/4"	F	STL	4	HM	4/A2.12	8/A2.12	8/A2.12	03		
RR	128	128		3' - 0"	7' - 0"	1 3/4"	F	SC	2	HM	17/A2.12	18/A2.12	18/A2.12	11		
CREW	129	129		3' - 0"	7' - 0"	1 3/4"	F	SC	2	HM	17/A2.12	18/A2.12	18/A2.12	12		
CREW	130	130		3' - 0"	7' - 0"	1 3/4"	F	SC	2	HM	17/A2.12	18/A2.12	18/A2.12	12		
RR	131	131		3' - 0"	7' - 0"	1 3/4"	F	SC	2	HM	17/A2.12	18/A2.12	18/A2.12	11		
RR	132	132		3' - 0"	7' - 0"	1 3/4"	F	SC	2	HM	17/A2.12	18/A2.12	18/A2.12	11		
CREW	133	133		3' - 0"	7' - 0"	1 3/4"	F	SC	2	HM	17/A2.12	18/A2.12	18/A2.12	12		
STOR.	134	134	■	3' - 0"	7' - 0"	1 3/4"	F	STL	3	HM	17/A2.12	18/A2.12	18/A2.12	03.1		
STOR.	135	135	■	3' - 0"	7' - 0"	1 3/4"	F	STL	3	HM	17/A2.12	18/A2.12	18/A2.12	03.1		
EMS CLOSET	136	136		3' - 6"	7' - 0"	1 3/4"	N	STL	1	HM	17/A2.12	15/A2.12	15/A2.12	06.3		CARD READER; COORDINATE W/ SECURITY CONTRACTOR
APPARATUS BAYS	138	142		3' - 8"	7' - 0"	1 3/4"	N2	STL	2	HM	4/A2.12	8/A2.12	8/A2.12	01.1	45 MIN. / D-H-45	CARD READER; COORDINATE W/ SECURITY CONTRACTOR
CORRIDOR	138A	123		3' - 6"	7' - 0"	1 3/4"	N	SC	2	HM	17/A2.12	15/A2.12		04.1		
CORRIDOR	138B	123		3' - 6"	7' - 0"	1 3/4"	N	SC	2	HM	17/A2.12	18/A2.12	18/A2.12	04.1		
DAY ROOM	139	139		10' - 0"	8' - 0"	1 3/4"	BD				19/A2.12	-	-	19		
DAY ROOM	139A	139		3' - 0"	7' - 0"	1 3/4"	N	SC	2	HM	12/A2.12	16/A2.12	16/A2.12	08.2		
VEST.	140A	140		3' - 6"	7' - 0"	1 3/4"	N2	SC	2	HM	17/A2.12	18/A2.12	18/A2.12	04.1		
APPARATUS BAYS	140B	142		3' - 8"	7' - 0"	1 3/4"	N2	STL	2	HM	12/A2.12	16/A2.12	16/A2.12	01.1	45 MIN./ D-H-45	CARD READER; COORDINATE W/ SECURITY CONTRACTOR
OFFICE	141	141		3' - 6"	7' - 0"	1 3/4"	F	AL		AL	9/A2.12	11/A2.12	10/A2.12	09		
APPARATUS BAYS	142	142		3' - 0"	7' - 0"	1 3/4"	N2	STL	2	HM	5/A2.12	6/A2.12	7/A2.12	06		CARD READER; COORDINATE W/ SECURITY CONTRACTOR
APPARATUS BAYS	142A	142		14' - 0"	14' - 0"		FD				13/A2.13	16/A2.13	16/A2.13	15		
APPARATUS BAYS	142B	142		14' - 0"	14' - 0"		FD				13/A2.13	16/A2.13	16/A2.13	15		
APPARATUS BAYS	142C	142		14' - 0"	14' - 0"		FD				13/A2.13	16/A2.13	16/A2.13	15		
APPARATUS BAYS	142D	142		14' - 0"	14' - 0"	2"	OHS				11/A2.13	15/A2.13	15/A2.13	15.1		
APPARATUS BAYS	142E	142		14' - 0"	14' - 0"	2"	OHS				11/A2.13	15/A2.13	15/A2.13	15.1		
APPARATUS BAYS	142F	142		14' - 0"	14' - 0"	2"	OHS				11/A2.13	15/A2.13	15/A2.13	15.1		
RISER	143	143		3' - 0"	7' - 0"	1 3/4"	F	STL	2	STL	4/A2.12	8/A2.12	8/A2.12	05		
STOR.	144	144		3' - 0"	7' - 0"	1 3/4"	F		1		17/A2.12	18/A2.12	18/A2.12	07		
TOOL SHOP	145	145	■	3' - 2"	7' - 0"	1 3/4"	F	STL	4	HM	12/A2.12	16/A2.12	16/A2.12	03.2		
TOOL SHOP	145A	145		3' - 8"	7' - 0"	1 3/4"	F	STL	2	STL	4/A2.12	8/A2.12	8/A2.12	05.1		
RR.	146	146		3' - 0"	7' - 0"	1 3/4"	F		2		12/A2.12	16/A2.12	16/A2.12	11		
COMPR.	147	147		4' - 0"	7' - 0"	1 3/4"	H		3	HM	17/A2.12	18/A2.12	18/A2.12	07.3		
ELEC.	148	148		3' - 8"	7' - 0"	1 3/4"	F	STL	2	STL	4/A2.12	8/A2.12	8/A2.12	04		
ELEC.	148A	148		3' - 8"	7' - 0"	1 3/4"	F		2	HM	13/A2.12	14/A2.12	14/A2.12	04.2	90 MIN.	
SCBA AIR ROOM	149	149	■	3' - 2"	7' - 0"	1 3/4"	F	STL		HM	12/A2.12	16/A2.12	16/A2.12	03.2		
TURNOUT GEAR	150	150	■	3' - 2"	7' - 0"	1 3/4"	GG	STL/GL	4	HM	13/A2.12	14/A2.12	14/A2.12	03.1		
TURNOUT GEAR	150A	150		3' - 0"	7' - 0"	1 3/4"	N	SC	1	HM	17/A2.12	18/A2.12	18/A2.12	13.1		
RED ZONE VEST. & LAUNDRY	151	151		3' - 8"	7' - 0"	1 3/4"	N2	SC	2	HM	12/A2.12	16/A2.12	16/A2.12	07.1		
RED ZONE VEST. & LAUNDRY	151A	151		3' - 8"	7' - 0"	1 3/4"	N2	STL	2	STL	4/A2.12	8/A2.12	8/A2.12	06.4		CARD READER; COORDINATE W/ SECURITY CONTRACTOR
STORAGE	152	152	■	3' - 2"	7' - 0"	1 3/4"	F	STL	2	STL	4/A2.12	8/A2.12	8/A2.12	03.3		CARD READER; COORDINATE W/ SECURITY CONTRACTOR

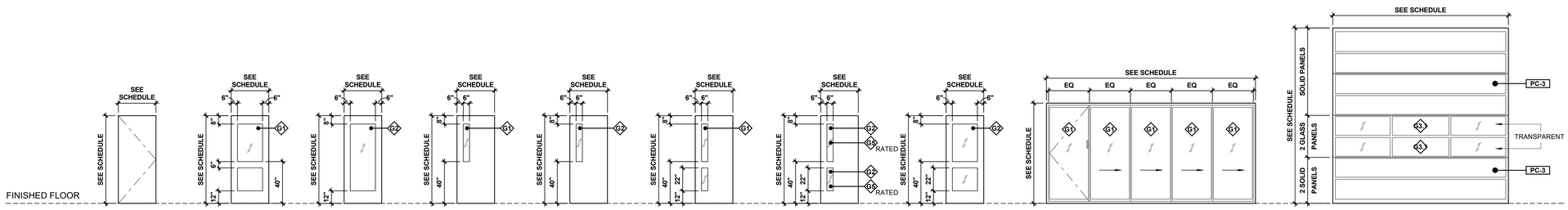

DOOR PANEL TYPES
SCALE: 1/4" = 1'-0"

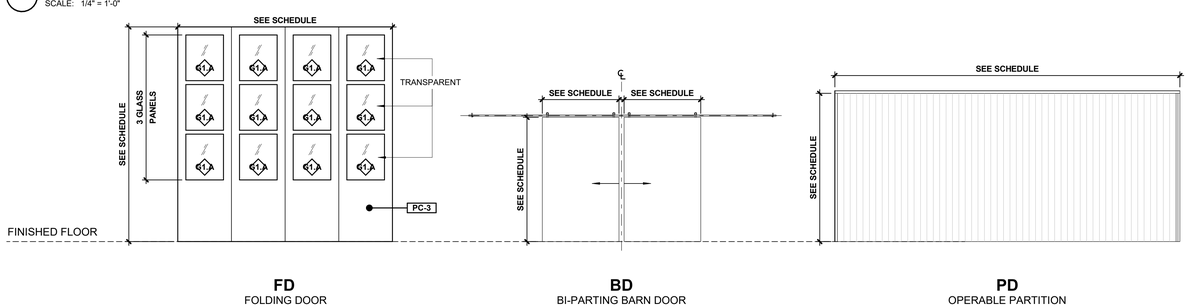

DOOR PANEL TYPES - CONTINUATION
SCALE: 1/4" = 1'-0"

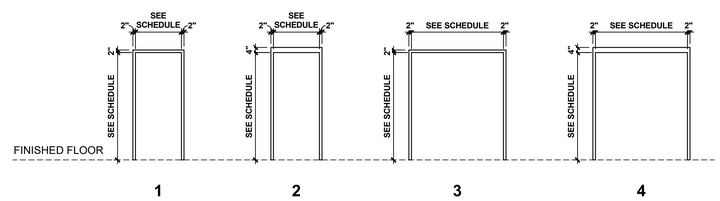

DOOR FRAME TYPES
SCALE: 1/4" = 1'-0"

GENERAL NOTES

1. VERIFY ALL DIMENSIONS IN FIELD PRIOR TO FABRICATION.
2. GRIND ALL WELDS SMOOTH.
3. COORDINATE ALL FRAMES WITH INTRUSION ALARM CONDUIT ROUGH-IN REQUIREMENTS, PER ELECTRICAL DRAWINGS.
4. THE BOTTOM 12" OF DOOR (EXCEPT AUTOMATIC DOORS) SHALL HAVE A SMOOTH UNINTERRUPTED SURFACE.
5. ALL ALUMINUM FRAMES TO BE FACTORY FINISHED.
6. ALL STEEL FRAMES AND DOORS TO BE PAINTED. REFER TO PAINT COLOR SCHEDULE.
7. TEMPERED GLAZING SHALL BE INSTALLED IN ACCORDANCE WITH IBC 2406.4.1.

KEYNOTES

LEGEND

HM	HOLLOW METAL
SC	SOLID-CORE
STL	STEEL
AL	ALUMINUM
PR	PAIR
X	GLASS TYPE, SEE SPECIFICATIONS

GLAZING TYPES:

G1 - EXTERIOR 1" LOW-E INSULATED TEMPERED SAFETY GLAZING

G1.A - EXTERIOR 1" INSULATED FULLY TEMPERED TRANSLUCENT GLAZING

G2 - INTERIOR 1/4" FULLY TEMPERED SAFETY GLAZING

G3.1 - EXTERIOR OVERHEAD DOOR 1/2" LOW-E INSULATED TEMPERED GLAZING

G5 - INTERIOR 1/4" FULLY TEMPERED FIRE-PROTECTION-RATED SAFETY GLAZING

NOTE: REFER TO SPECIFICATION FOR FULL DESCRIPTION OF GLAZING TYPES

tsk
225 South Arlington Avenue,
Suite A
Reno NV, 89501
phone: 775.857.2949
fax: 775.857.2403
www.tska.com

NOLBY M HARPSTEAD
REGISTERED
No. 8775
01/04/2024
ARCHITECT
STATE OF NEVADA

THESE DRAWINGS AND SPECIFICATIONS ARE THE PROPERTY OF TATE SNYDER KIMSEY ARCHITECTS AND MAY NOT BE REPRODUCED OR USED FOR ANY PURPOSE WITHOUT THE ARCHITECTS WRITTEN CONSENT. AS INSTRUMENTS OF SERVICE, THESE DOCUMENTS ARE NOT FINAL AND READY FOR USE, AND THEREFORE NOT VALID, UNLESS THEY ARE SEALED, SIGNED AND DATED.

Copyright, Ltd 2024

Consultant

PLEASE RECYCLE

Project
SPARKS Fire Station #6

6963 SCHEIDBAR ROAD, SPARKS NEVADA 89436

Job No: 22-043

Owner
CITY OF SPARKS

CITY OF SPARKS FIRE DEPARTMENT Est. 1905

BID SET

REVISIONS		
REV	DATE	DESCRIPTION
A	05.18.23	Review Comments

Sheet Title
DOOR SCHEDULE, PANEL AND FRAME TYPES

Date: JANUARY 4, 2024

Sheet No:
A2.11

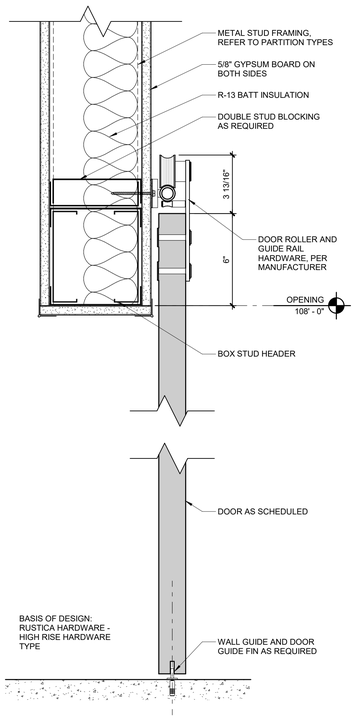

19 BARN DOOR HEAD DETAIL
SCALE: 3" = 1'-0"

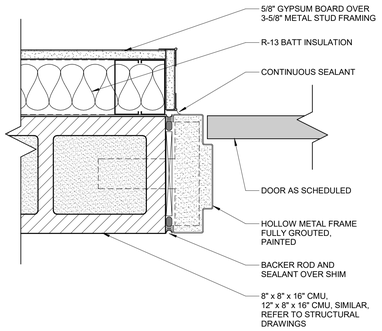

16 JAMB DETAIL @ INTERIOR CMU
SCALE: 3" = 1'-0"

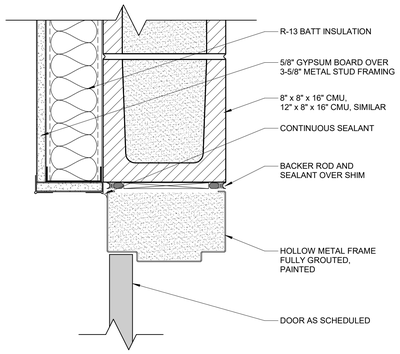

12 HEAD DETAIL @ INTERIOR CMU
SCALE: 3" = 1'-0"

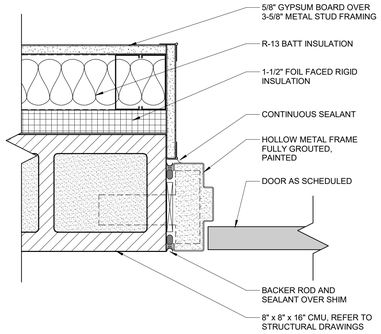

8 JAMB DETAIL @ EXTERIOR CMU
SCALE: 3" = 1'-0"

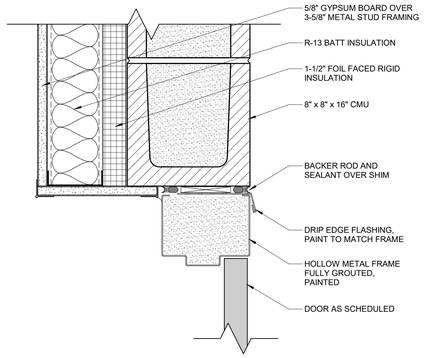

4 HEAD DETAIL @ EXTERIOR CMU
SCALE: 3" = 1'-0"

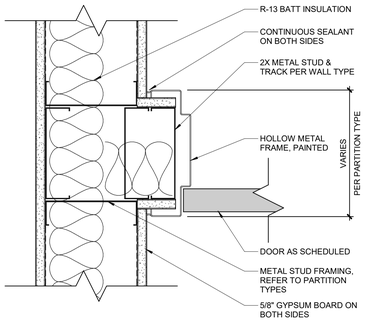

15 HM JAMB DETAIL
SCALE: 3" = 1'-0"

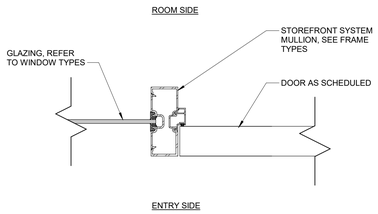

11 INTERIOR STOREFRONT - JAMB STRIKE SIDE
SCALE: 3" = 1'-0"

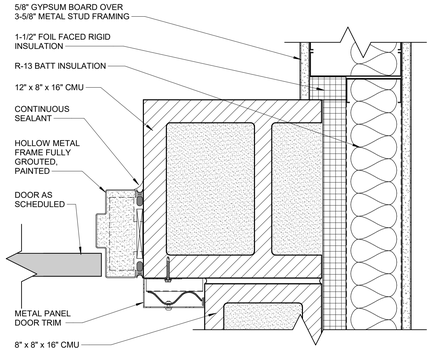

7 JAMB DETAIL @ EXTERIOR CMU
SCALE: 3" = 1'-0"

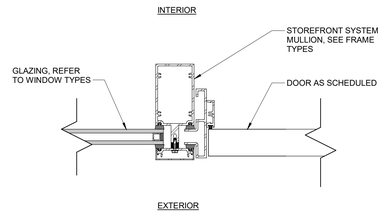

3 THERMALLY BROKEN ENTRANCE - JAMB STRIKE SIDE
SCALE: 3" = 1'-0"

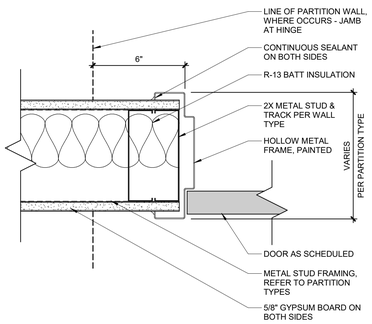

18 TYPICAL HM JAMB DETAIL
SCALE: 3" = 1'-0"

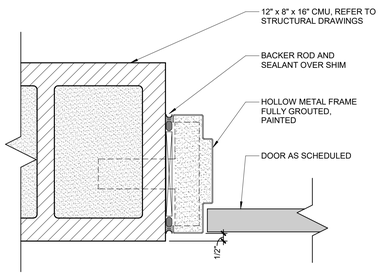

14 JAMB DETAIL @ INTERIOR CMU
SCALE: 3" = 1'-0"

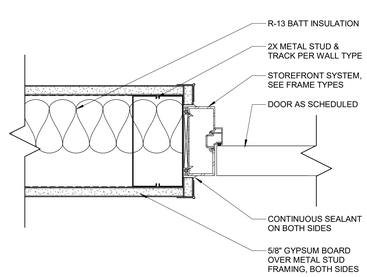

10 INTERIOR STOREFRONT - JAMB
SCALE: 3" = 1'-0"

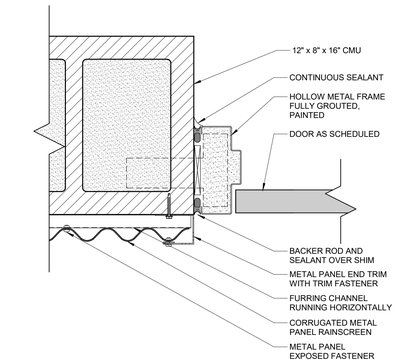

6 JAMB DETAIL @ EXTERIOR CMU WITH RAINSCREEN
SCALE: 3" = 1'-0"

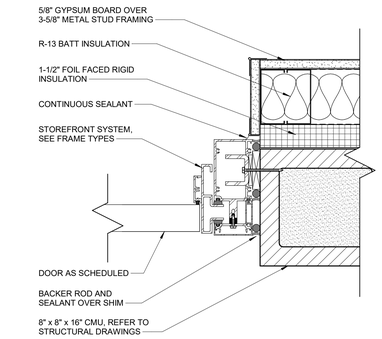

2 THERMALLY BROKEN ENTRANCE - JAMB
SCALE: 3" = 1'-0"

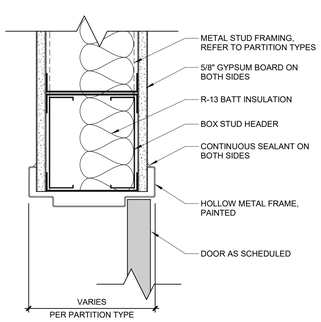

17 TYPICAL HM HEAD DETAIL
SCALE: 3" = 1'-0"

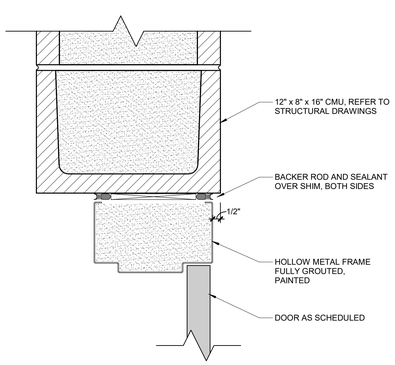

13 HEAD DETAIL @ INTERIOR CMU
SCALE: 3" = 1'-0"

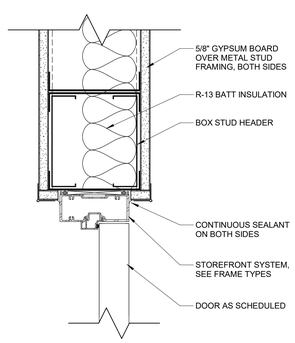

9 INTERIOR STOREFRONT - HEAD
SCALE: 3" = 1'-0"

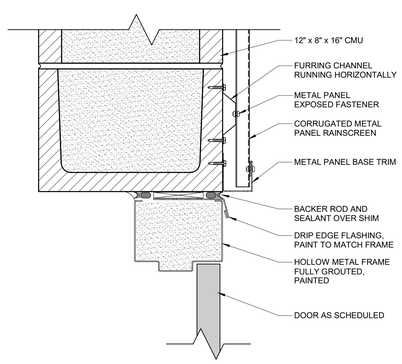

5 HEAD DETAIL @ EXTERIOR CMU WITH RAINSCREEN
SCALE: 3" = 1'-0"

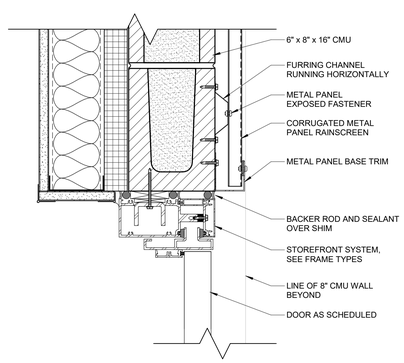

1 THERMALLY BROKEN ENTRANCE - HEAD
SCALE: 3" = 1'-0"

tsk
225 South Arlington Avenue,
Suite A
Reno NV, 89501
phone: 775.857.2949
fax: 775.857.2403
www.tska.com

THESE DRAWINGS AND SPECIFICATIONS ARE THE PROPERTY OF TATE SNYDER KIMSEY ARCHITECTS AND MAY NOT BE REPRODUCED OR USED FOR ANY PURPOSE WITHOUT THE ARCHITECTS WRITTEN CONSENT. AS INSTRUMENTS OF SERVICE, THESE DOCUMENTS ARE NOT FINAL AND READY FOR USE, AND THEREFORE NOT VALID, UNLESS THEY ARE SEALED, SIGNED AND DATED.

Copyright, Ltd 2024

Consultant

PLEASE RECYCLE

Project
SPARKS Fire Station #6

6963 SCHEIDBAR ROAD, SPARKS NEVADA 89436

Job No: 22-043

Owner
CITY OF SPARKS

BID SET

REVISIONS		
REV	DATE	DESCRIPTION

Sheet Title
DOOR DETAILS

Date: JANUARY 4, 2024
Sheet No:
A2.12

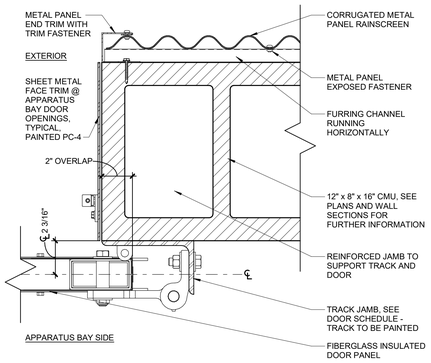

16 FOLDING DOOR JAMB AT APPARATUS BAY
SCALE: 3" = 1'-0"

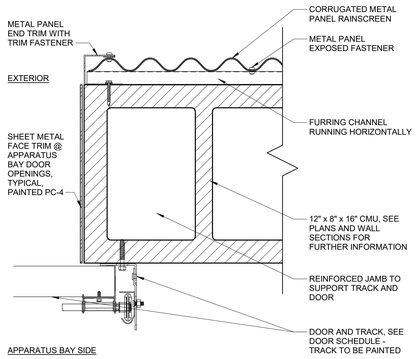

15 SECTIONAL DOOR JAMB AT APPARATUS BAY
SCALE: 3" = 1'-0"

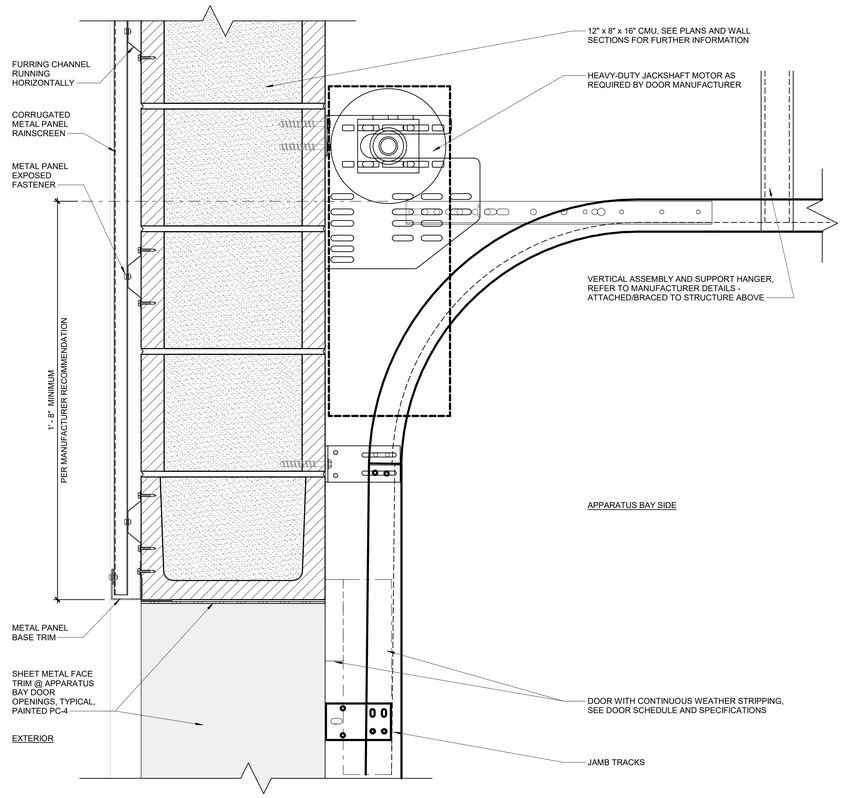

11 SECTIONAL DOOR HEAD AT APPARATUS BAY
SCALE: 3" = 1'-0"

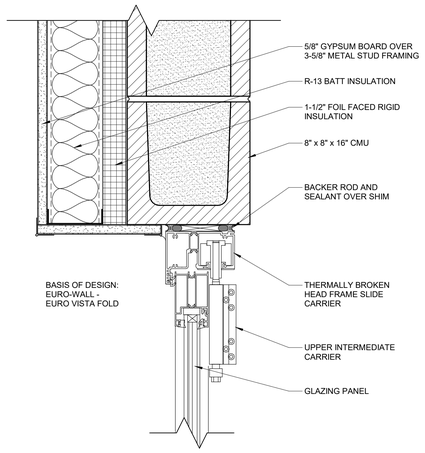

3 STACKING DOOR HEAD / SILL DETAIL
SCALE: 3" = 1'-0"

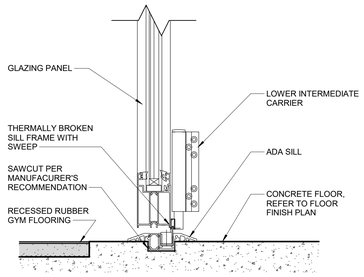

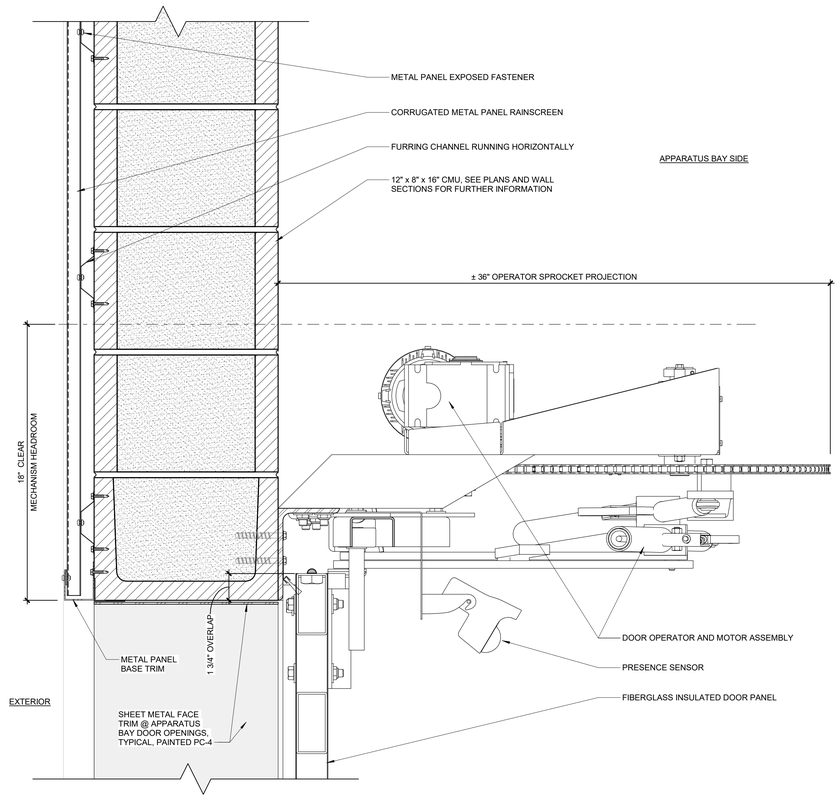

13 FOLDING DOOR HEAD AT APPARATUS BAY
SCALE: 3" = 1'-0"

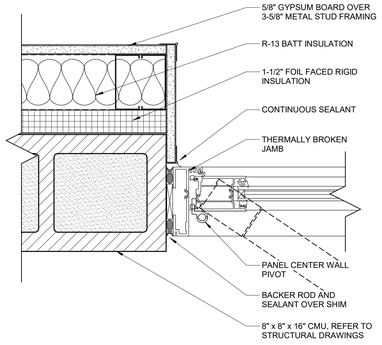

6 STACKING DOOR JAMB DETAIL
SCALE: 3" = 1'-0"

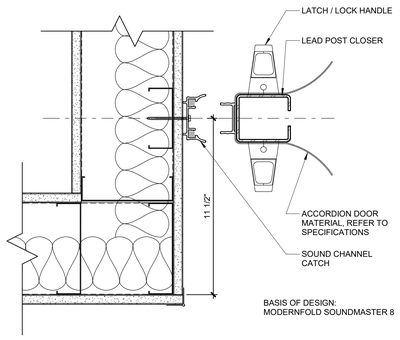

2 MOVABLE PARTITION JAMB LATCH DETAIL
SCALE: 3" = 1'-0"

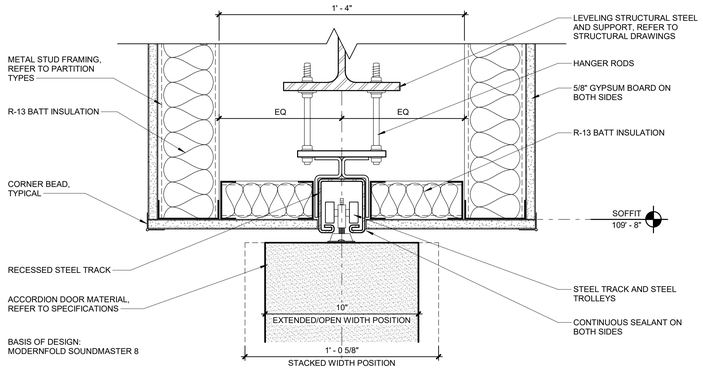

5 MOVABLE PARTITION HEAD DETAIL
SCALE: 3" = 1'-0"

tsk
225 South Arlington Avenue,
Suite A
Reno NV, 89501
phone: 775.857.2949
fax: 775.857.2403
www.tska.com

THESE DRAWINGS AND SPECIFICATIONS ARE THE PROPERTY OF TATE SNYDER KIMSEY ARCHITECTS AND MAY NOT BE REPRODUCED OR USED FOR ANY PURPOSE WITHOUT THE ARCHITECTS WRITTEN CONSENT. AS INSTRUMENTS OF SERVICE, THESE DOCUMENTS ARE NOT FINAL AND READY FOR USE, AND THEREFORE NOT VALID, UNLESS THEY ARE SEALED, SIGNED AND DATED.

Copyright, Ltd 2024

Consultant

PLEASE RECYCLE

Project
SPARKS Fire Station #6

6963 SCHEIDBAR ROAD, SPARKS NEVADA 89436

Job No: 22-043

Owner
CITY OF SPARKS

BID SET

REVISIONS		
REV	DATE	DESCRIPTION

Sheet Title
DOOR DETAILS

Date: JANUARY 4, 2024
Sheet No:
A2.13

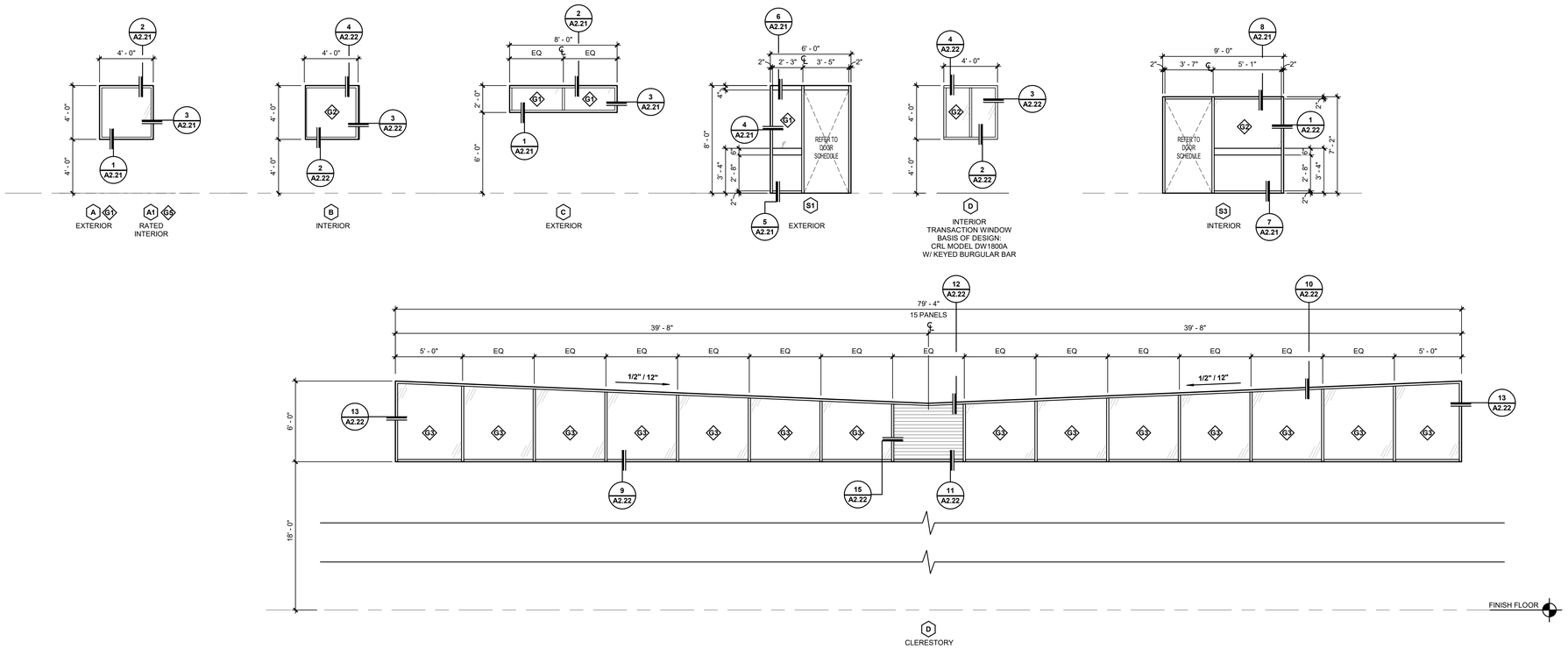

A WINDOW TYPES
SCALE: 1/4" = 1'-0"

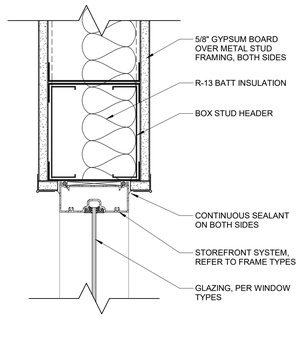

8 STOREFRONT HEAD @ INTERIOR
SCALE: 3" = 1'-0"

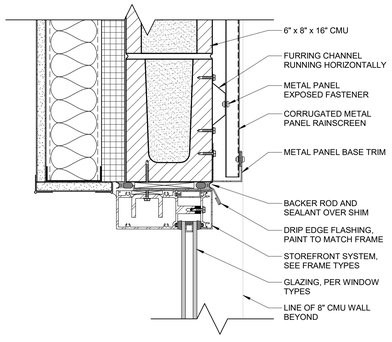

6 THERMALLY BROKEN STOREFRONT - HEAD
SCALE: 3" = 1'-0"

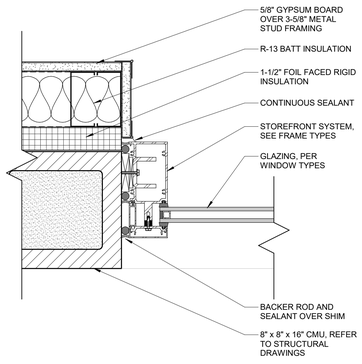

4 THERMALLY BROKEN STOREFRONT - JAMB
SCALE: 3" = 1'-0"

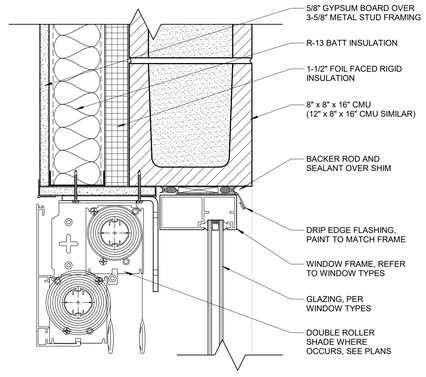

2 WINDOW HEAD DETAIL @ EXTERIOR CMU
SCALE: 3" = 1'-0"

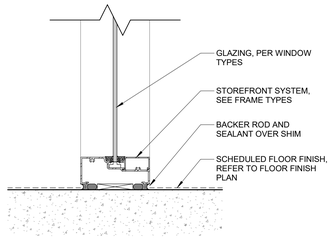

7 STOREFRONT SILL @ INTERIOR
SCALE: 3" = 1'-0"

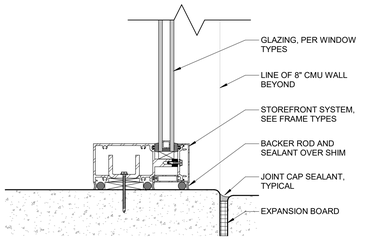

5 THERMALLY BROKEN STOREFRONT - SILL
SCALE: 3" = 1'-0"

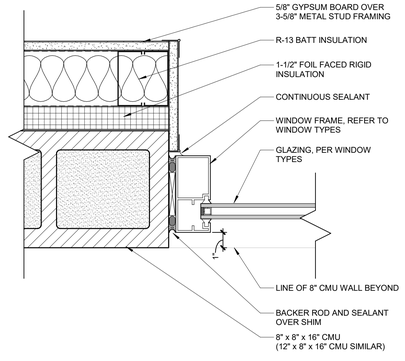

3 WINDOW JAMB DETAIL @ EXTERIOR CMU
SCALE: 3" = 1'-0"

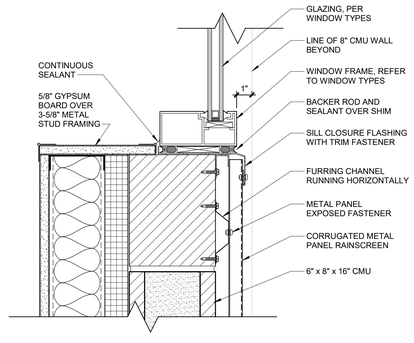

1 WINDOW SILL DETAIL @ EXTERIOR CMU
SCALE: 3" = 1'-0"

GENERAL NOTES

1. VERIFY ALL DIMENSIONS IN FIELD PRIOR TO FABRICATION.
2. ALL SILL DIMENSIONS ARE TAKEN FROM FINISH FLOOR UNLESS NOTED OTHERWISE.
3. ALL ALUMINUM FRAMES TO BE FACTORY FINISHED.
4. ALL STEEL FRAMES TO BE PAINTED. REFER TO PAINT COLOR SCHEDULE.
5. COORDINATE ALL FRAMES WITH INTRUSION ALARM CONDUIT ROUGH-IN REQUIREMENTS, PER ELECTRICAL DRAWINGS.
6. TEMPERED GLAZING SHALL BE INSTALLED IN ACCORDANCE WITH IBC 2406.4.1.

KEYNOTES

LEGEND

- CLEAR GLAZING
- LOUVER PANEL
- G1 — EXTERIOR 1" LOW-E INSULATED TEMPERED SAFETY GLAZING
- G2 — INTERIOR 1/4" FULLY TEMPERED SAFETY GLAZING
- G3 — EXTERIOR 1" INSULATED TRANSLUCENT UNIT
- G5 — INTERIOR 1/4" FULLY TEMPERED FIRE-PROTECTION-RATED SAFETY GLAZING

tsk
225 South Arlington Avenue,
Suite A
Reno NV, 89501
phone: 775.857.2949
fax: 775.857.2403
www.tska.com

THESE DRAWINGS AND SPECIFICATIONS ARE THE PROPERTY OF TATE SNYDER KIMSEY ARCHITECTS AND MAY NOT BE REPRODUCED OR USED FOR ANY PURPOSE WITHOUT THE ARCHITECTS WRITTEN CONSENT. AS INSTRUMENTS OF SERVICE, THESE DOCUMENTS ARE NOT FINAL AND READY FOR USE, AND THEREFORE NOT VALID, UNLESS THEY ARE SEALED, SIGNED AND DATED.

Copyright, Ltd 2024

Consultant

PLEASE RECYCLE

Project
SPARKS Fire Station #6

6963 SCHEIDBAR ROAD, SPARKS NEVADA 89436

Job No: 22-043

Owner
CITY OF SPARKS

BID SET

REVISIONS

REV	DATE	DESCRIPTION
A	05.18.23	Review Comments

Sheet Title
WINDOW TYPES AND DETAILS

Date: JANUARY 4, 2024
Sheet No:
A2.21

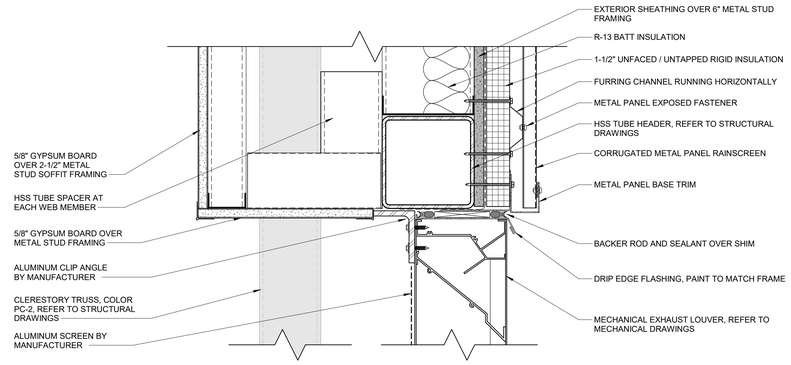

12 LOUVER HEAD DETAIL @ CLERESTORY
SCALE: 3" = 1'-0"

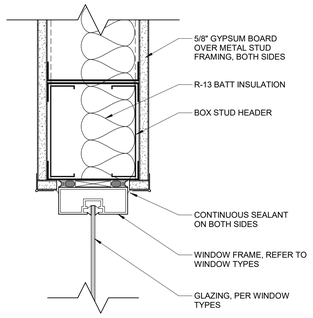

4 WINDOW HEAD DETAIL @ INTERIOR
SCALE: 3" = 1'-0"

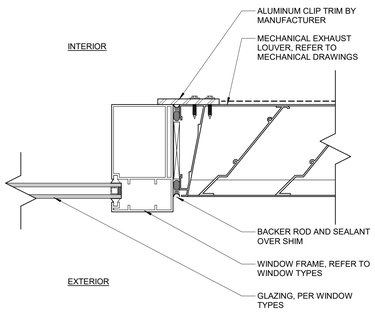

15 LOUVER JAMB DETAIL @ CLERESTORY
SCALE: 3" = 1'-0"

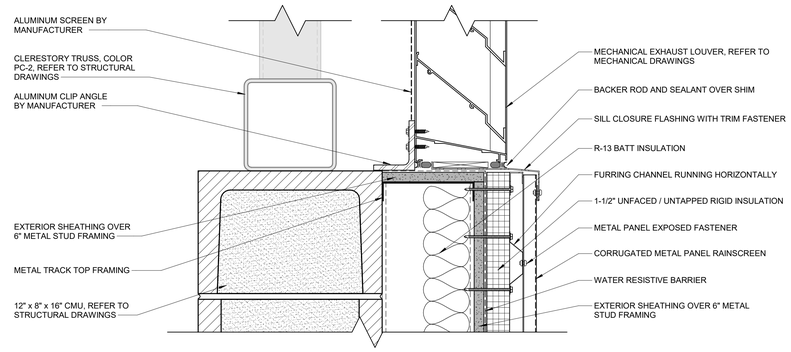

11 LOUVER SILL DETAIL @ CLERESTORY
SCALE: 3" = 1'-0"

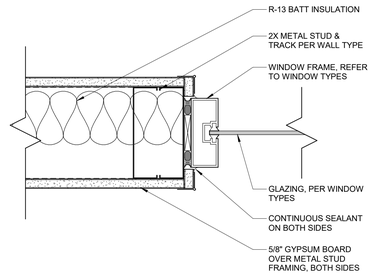

3 WINDOW JAMB DETAIL @ INTERIOR
SCALE: 3" = 1'-0"

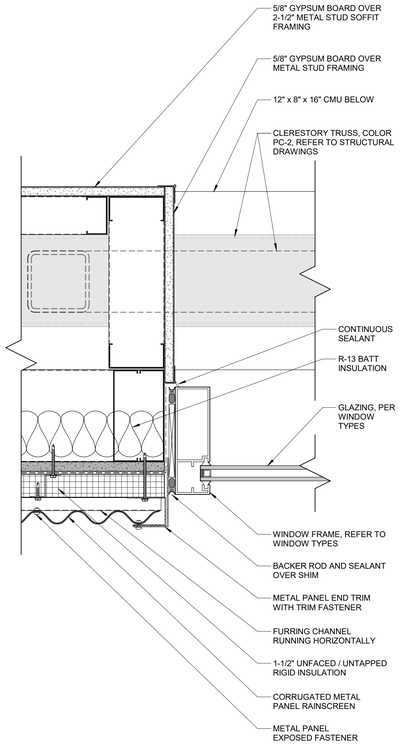

13 CLERESTORY JAMB DETAIL @ CMU
SCALE: 3" = 1'-0"

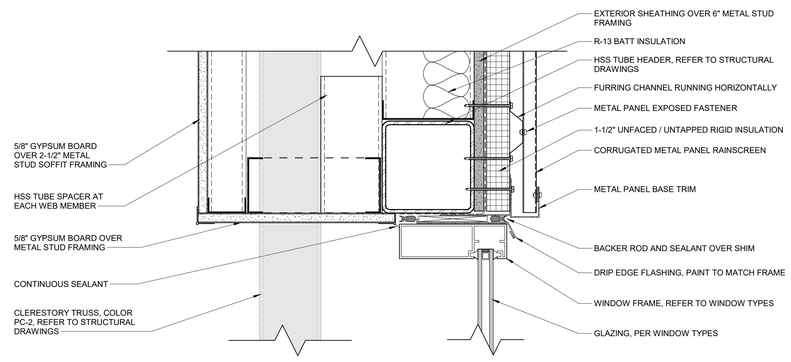

10 CLERESTORY HEAD DETAIL @ CMU
SCALE: 3" = 1'-0"

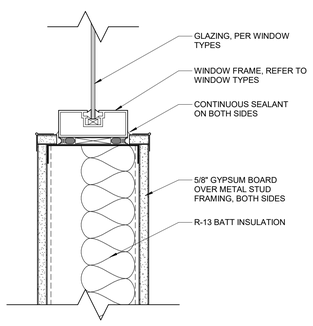

2 WINDOW SILL DETAIL @ INTERIOR
SCALE: 3" = 1'-0"

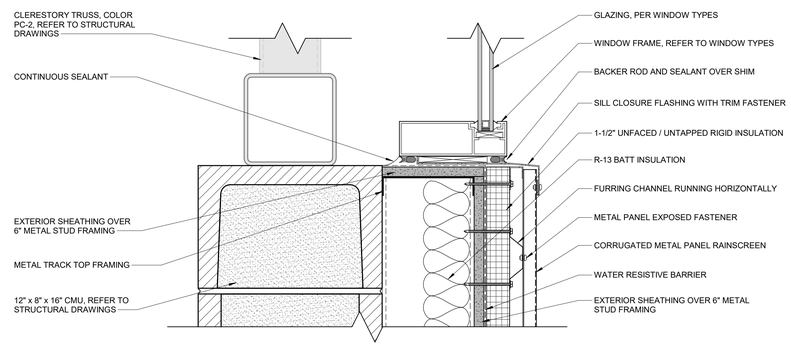

9 CLERESTORY SILL DETAIL @ CMU
SCALE: 3" = 1'-0"

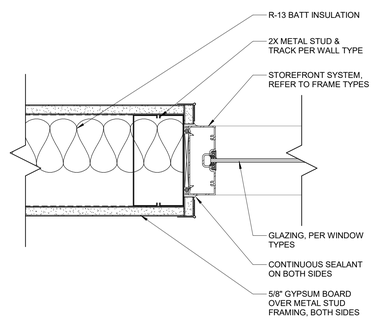

1 STOREFRONT JAMB @ INTERIOR
SCALE: 3" = 1'-0"

tsk
225 South Arlington Avenue,
Suite A
Reno NV, 89501
phone: 775.857.2949
fax: 775.857.2403
www.tska.com

NOLBY M HARPSTEAD REGISTERED No. 8775 01/04/2024 ARCHITECT STATE OF NEVADA

THESE DRAWINGS AND SPECIFICATIONS ARE THE PROPERTY OF TATE SNYDER KIMSEY ARCHITECTS AND MAY NOT BE REPRODUCED OR USED FOR ANY PURPOSE WITHOUT THE ARCHITECTS WRITTEN CONSENT. AS INSTRUMENTS OF SERVICE, THESE DOCUMENTS ARE NOT FINAL AND READY FOR USE, AND THEREFORE NOT VALID, UNLESS THEY ARE SEALED, SIGNED AND DATED.

Copyright, Ltd 2024

Consultant

PLEASE RECYCLE

Project
SPARKS Fire Station #6

6963 SCHEIDBAR ROAD, SPARKS NEVADA 89436

Job No: 22-043

Owner
CITY OF SPARKS

BID SET

REVISIONS		
REV	DATE	DESCRIPTION

Sheet Title
WINDOW DETAILS

Date: JANUARY 4, 2024
Sheet No:
A2.22

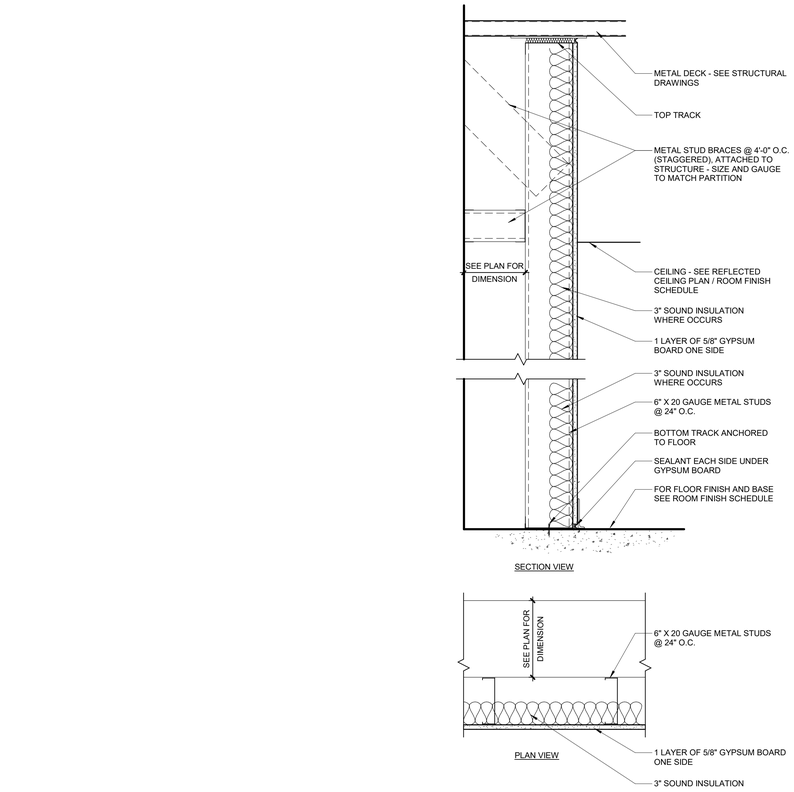

PARTITION TYPE — FULL HEIGHT — E9
SCALE : 1 1/2" = 1'-0"

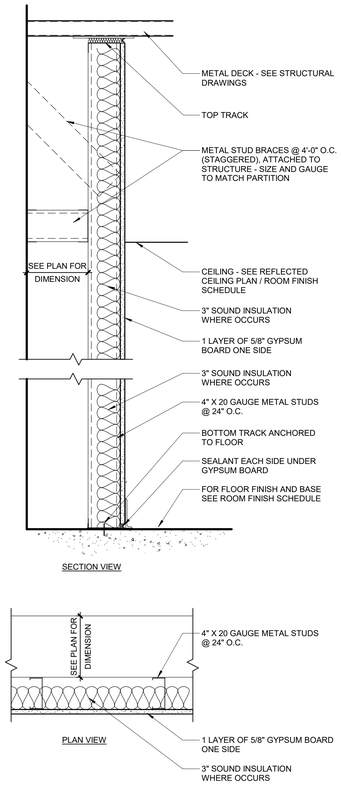

PARTITION TYPE — FULL HEIGHT — E8
SCALE : 1 1/2" = 1'-0"

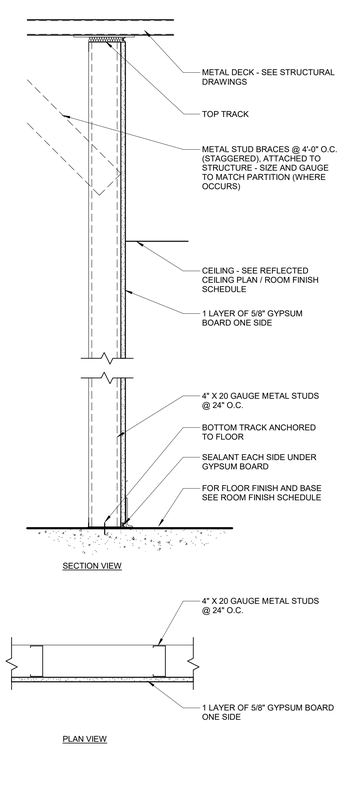

PARTITION TYPE — FULL HEIGHT — E4
SCALE : 1 1/2" = 1'-0"

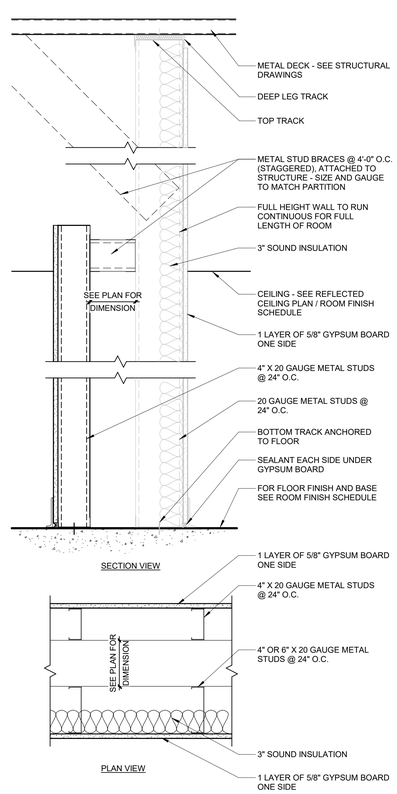

PARTITION TYPE — E1
SCALE : 1 1/2" = 1'-0"

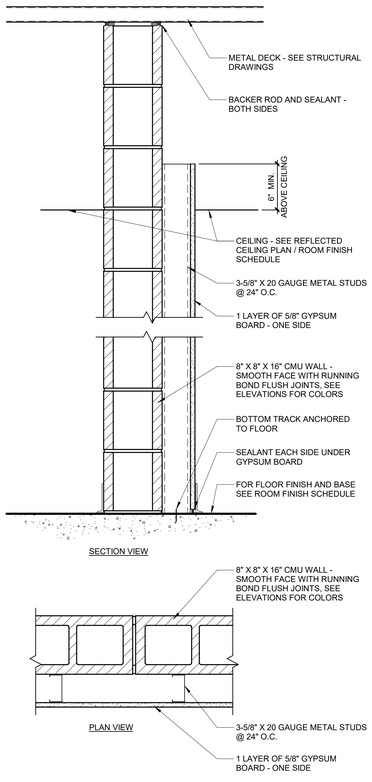

PARTITION TYPE — D17
SCALE : 1 1/2" = 1'-0"

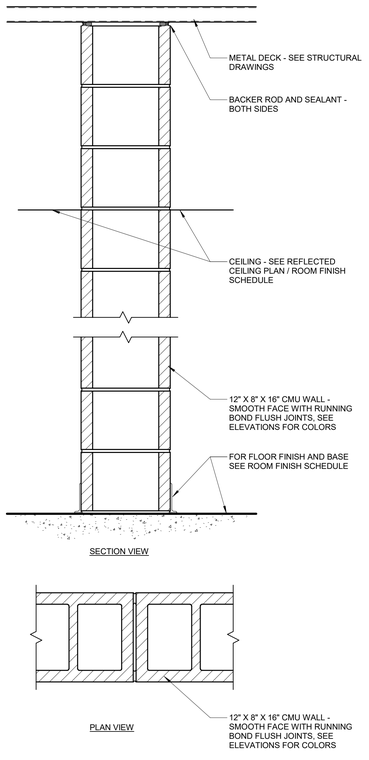

PARTITION TYPE — D6
SCALE : 1 1/2" = 1'-0"

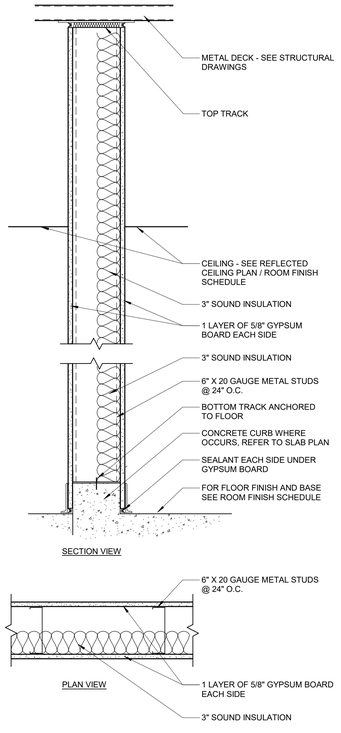

ACOUSTICAL PARTITION - STC 50 @ STUDY 125 AND CREW ROOMS
ACOUSTICAL PARTITION - STC 45 @ ALL OTHER PARTITION

PARTITION TYPE — C8
SCALE : 1 1/2" = 1'-0"

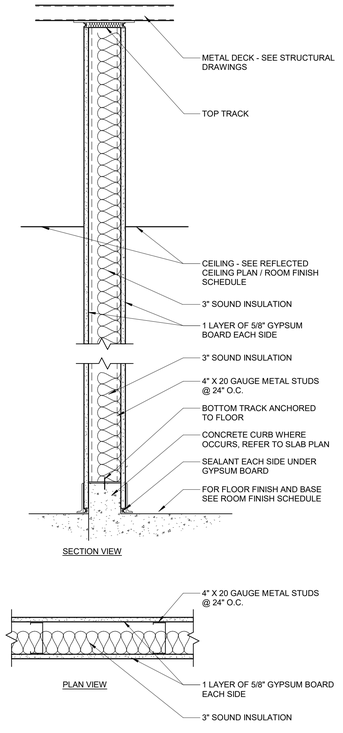

ACOUSTICAL PARTITION - STC 45

PARTITION TYPE — C7
SCALE : 1 1/2" = 1'-0"

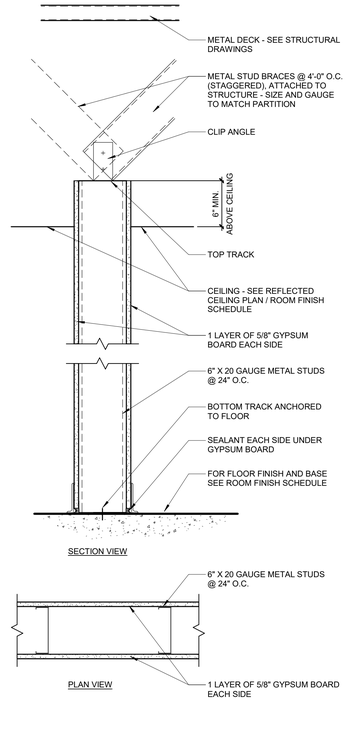

PARTITION TYPE — A2
SCALE : 1 1/2" = 1'-0"

tsk

225 South Arlington Avenue,
Suite A
Reno NV, 89501
phone: 775.857.2949
fax: 775.857.2403
www.tska.com

THESE DRAWINGS AND SPECIFICATIONS ARE THE PROPERTY OF TATE SNYDER KIMSEY ARCHITECTS AND MAY NOT BE REPRODUCED OR USED FOR ANY PURPOSE WITHOUT THE ARCHITECTS WRITTEN CONSENT. AS INSTRUMENTS OF SERVICE, THESE DOCUMENTS ARE NOT FINAL AND READY FOR USE, AND THEREFORE NOT VALID, UNLESS THEY ARE SEALED, SIGNED AND DATED.

Copyright, Ltd 2024

Consultant

PLEASE RECYCLE

Project

SPARKS Fire Station #6

6963 SCHEIDBAR ROAD, SPARKS NEVADA 89436

Job No: 22-043

Owner

CITY OF SPARKS

BID SET

REVISIONS		
REV	DATE	DESCRIPTION

Sheet Title

PARTITION TYPES

Date: JANUARY 4, 2024

Sheet No:

A2.31

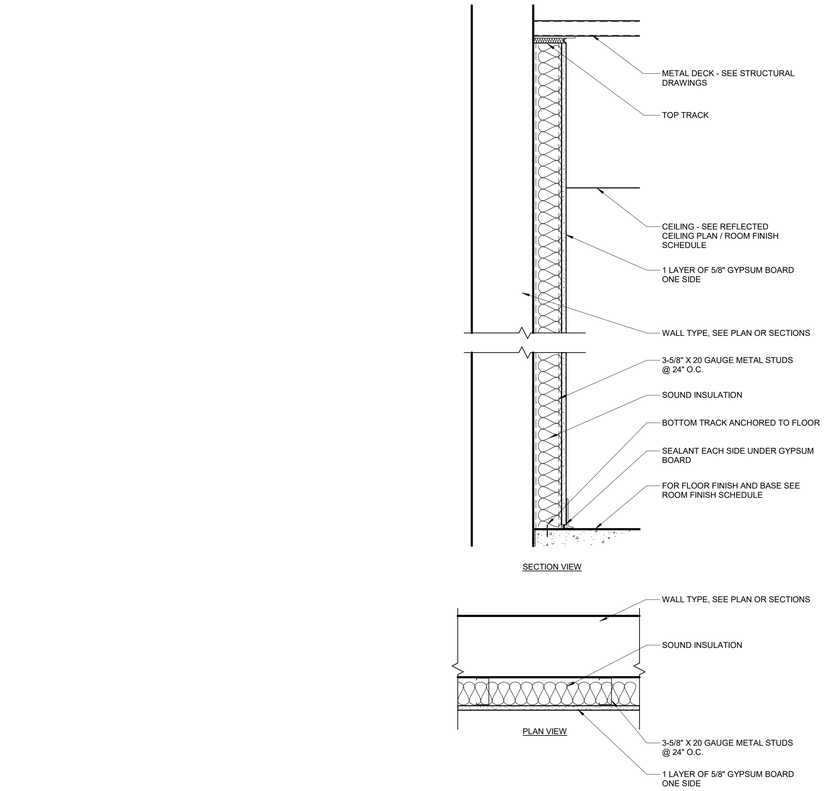

PARTITION TYPE — FULL HEIGHT — G5
SCALE : 1 1/2" = 1'-0"

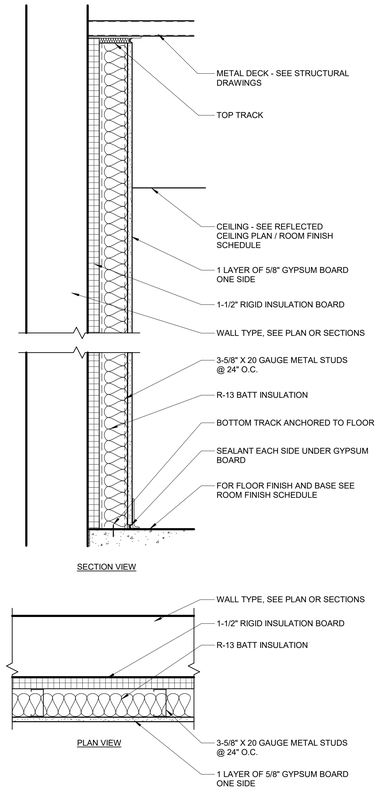

PARTITION TYPE — FULL HEIGHT — G4
SCALE : 1 1/2" = 1'-0"

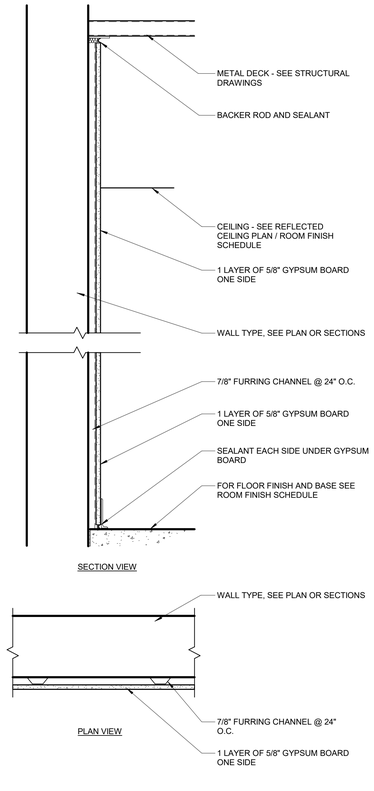

PARTITION TYPE — FULL HEIGHT — G3
SCALE : 1 1/2" = 1'-0"

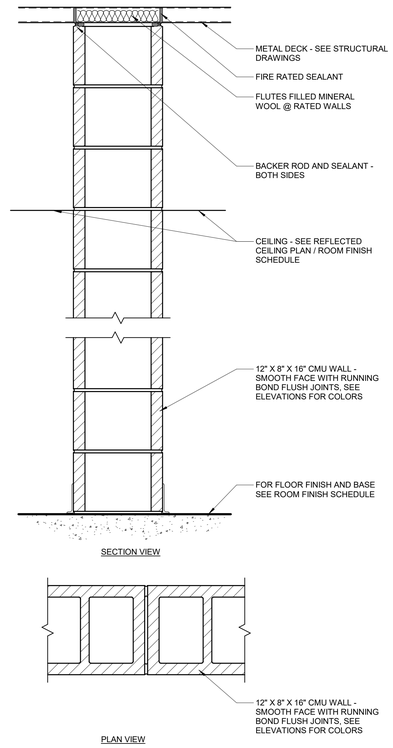

PARTITION TYPE — UL NO. U937 2 HOUR RATED PARTITION — F12
SCALE : 1 1/2" = 1'-0"

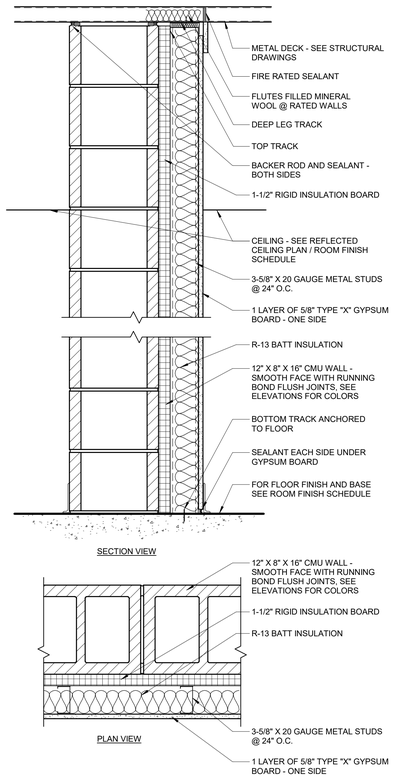

PARTITION TYPE — UL NO. U937 1 HOUR RATED PARTITION — F10
SCALE : 1 1/2" = 1'-0"

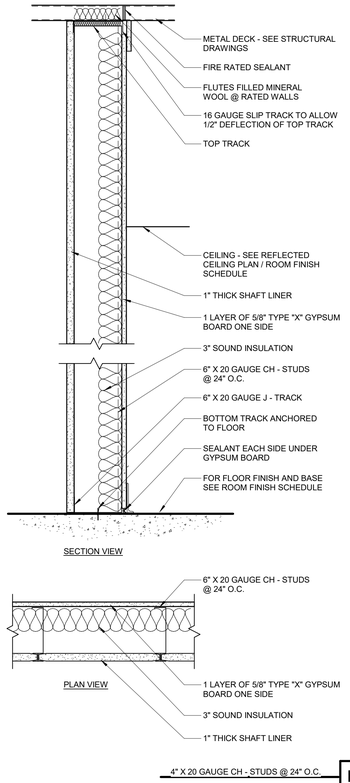

4" X 20 GAUGE CH - STUDS @ 24" O.C. — F6

PARTITION TYPE — UL NO. U425 1 HOUR RATED PARTITION — F7
SCALE : 1 1/2" = 1'-0"

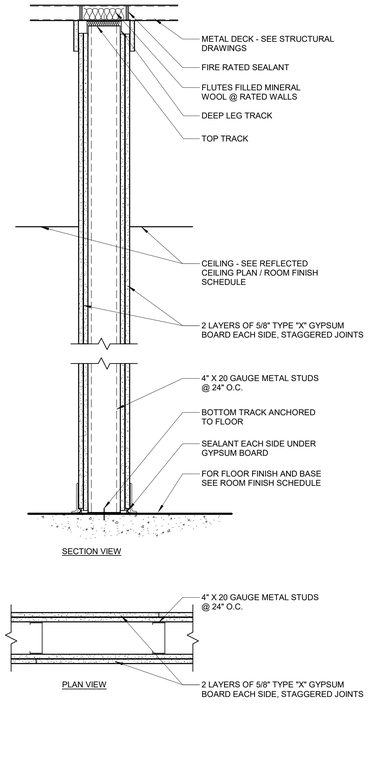

PARTITION TYPE — UL NO. U425 2 HOUR RATED PARTITION — F4
SCALE : 1 1/2" = 1'-0"

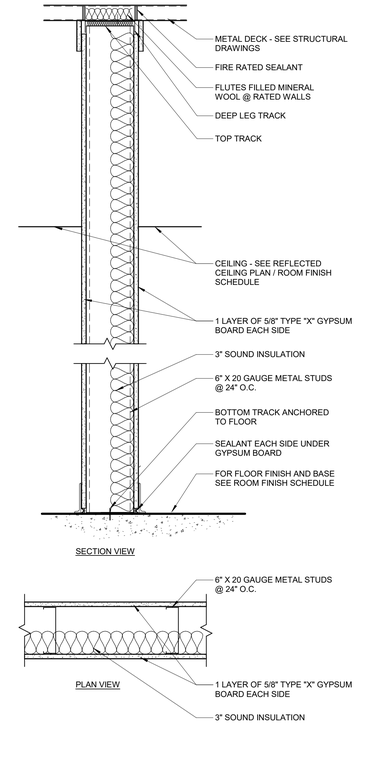

PARTITION TYPE — UL NO. U425 1 HOUR RATED PARTITION — F2
SCALE : 1 1/2" = 1'-0"

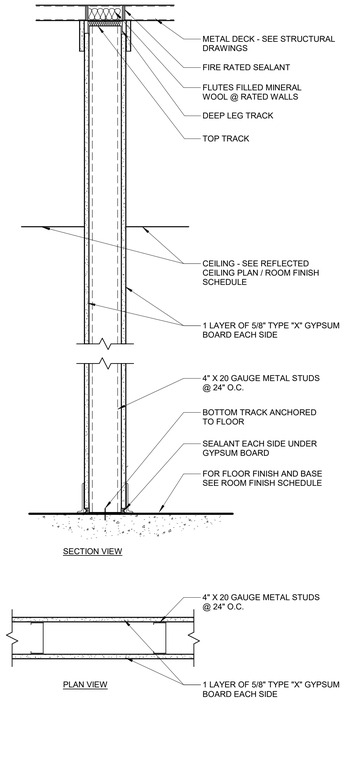

PARTITION TYPE — UL NO. U425 1 HOUR RATED PARTITION — F1
SCALE : 1 1/2" = 1'-0"

tsk

225 South Arlington Avenue,
Suite A
Reno NV, 89501
phone: 775.857.2949
fax: 775.857.2403
www.tska.com

THESE DRAWINGS AND SPECIFICATIONS ARE THE PROPERTY OF TATE SNYDER KIMSEY ARCHITECTS AND MAY NOT BE REPRODUCED OR USED FOR ANY PURPOSE WITHOUT THE ARCHITECTS WRITTEN CONSENT. AS INSTRUMENTS OF SERVICE, THESE DOCUMENTS ARE NOT FINAL AND READY FOR USE, AND THEREFORE NOT VALID, UNLESS THEY ARE SEALED, SIGNED AND DATED.

Copyright, Ltd 2024

Consultant

PLEASE RECYCLE

Project

SPARKS Fire Station #6

6963 SCHEIDBAR ROAD, SPARKS NEVADA 89436

Job No: 22-043

Owner

CITY OF SPARKS

BID SET

REVISIONS

REV	DATE	DESCRIPTION

Sheet Title

PARTITION TYPES

Date: JANUARY 4, 2024

Sheet No:

A2.32

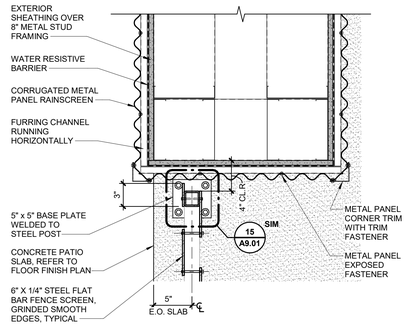

16 PATIO WALL PLAN DETAIL
SCALE: 1 1/2" = 1'-0"

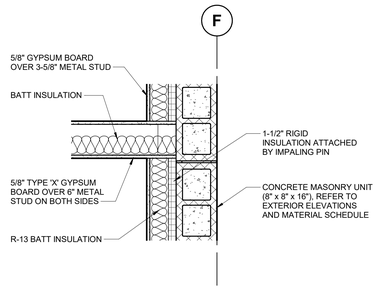

12 RATED PARTITION TERMINATION DETAIL
SCALE: 1" = 1'-0"

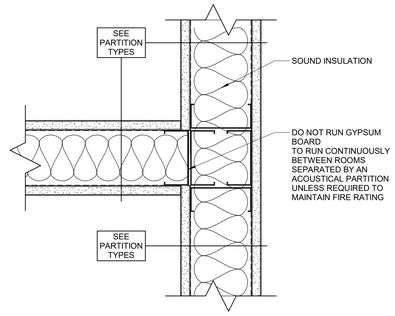

8 ACOUSTICAL WALL DETAIL
SCALE: 3" = 1'-0"

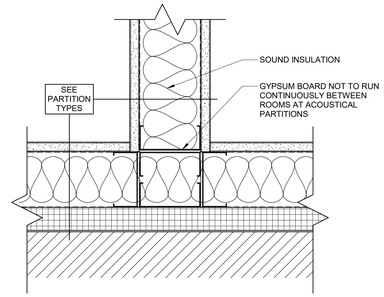

4 ACOUSTICAL WALL DETAIL
SCALE: 3" = 1'-0"

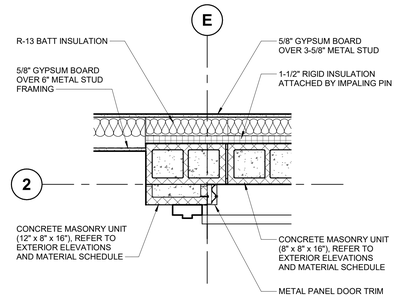

15 WALL TRANSITION DETAIL
SCALE: 1" = 1'-0"

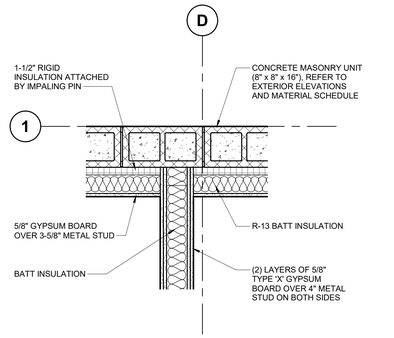

11 RATED PARTITION TERMINATION DETAIL
SCALE: 1" = 1'-0"

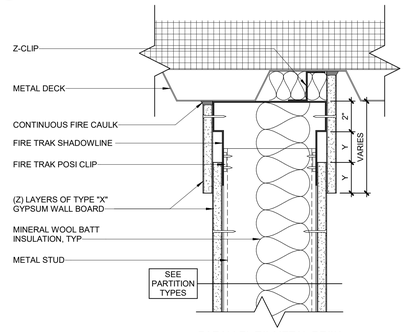

PARALLEL TO METAL DECK

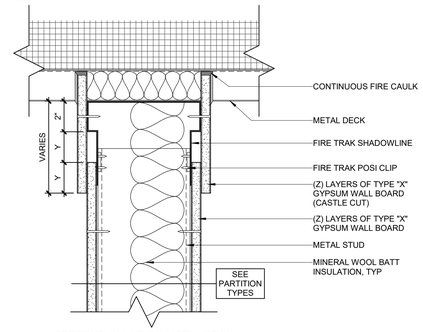

PERPENDICULAR TO METAL DECK

NOTE:
1. REFER TO STRUCTURAL DRAWINGS FOR DEFLECTION REQUIREMENT (SHOWN AS "Y")
2. ONLY (1) LAYER OF TYP "X" GYPSUM WALL BOARD SHOWN FOR CLARITY, SEE PARTITION TYPES FOR ACTUAL NUMBER OF LAYERS REQUIRED (SHOWN AS "Z")

7 HEAD-OF-WALL DEFLECTION DETAIL - FIRE RATED PARTITION
SCALE: 3" = 1'-0"

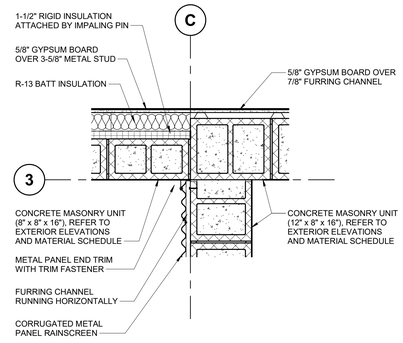

14 WALL TRANSITION DETAIL
SCALE: 1" = 1'-0"

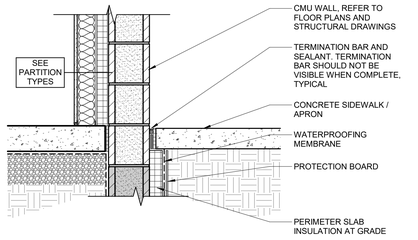

AT SIDEWALK / APRON

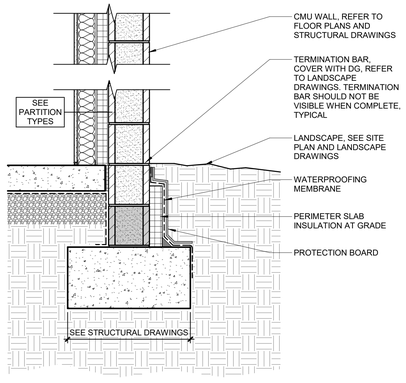

AT LANDSCAPE

9 TYPICAL PERIMETER BELOW GRADE DETAIL
SCALE: 1" = 1'-0"

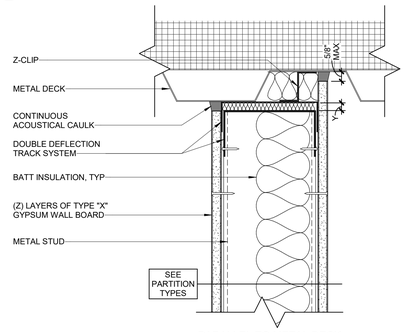

PARALLEL TO METAL DECK

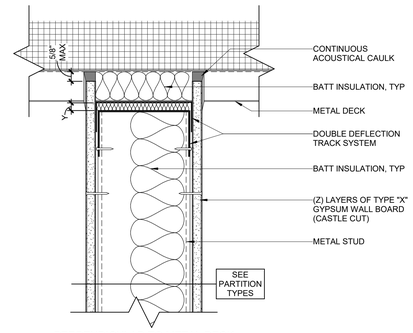

PERPENDICULAR TO METAL DECK

NOTE:
1. REFER TO STRUCTURAL DRAWINGS FOR DEFLECTION REQUIREMENT (SHOWN AS "Y")
2. ONLY (1) LAYER OF TYP "X" GYPSUM WALL BOARD SHOWN FOR CLARITY, SEE PARTITION TYPES FOR ACTUAL NUMBER OF LAYERS REQUIRED (SHOWN AS "Z")

6 HEAD-OF-WALL DEFLECTION DETAIL - ACOUSTICAL PARTITION
SCALE: 3" = 1'-0"

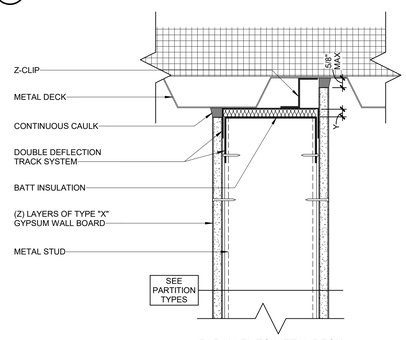

PARALLEL TO METAL DECK

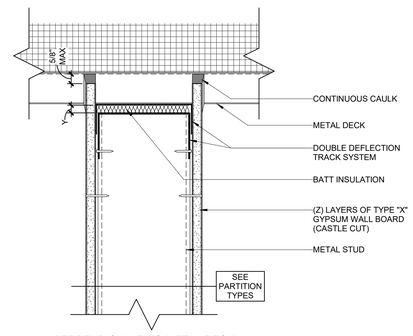

PERPENDICULAR TO METAL DECK

NOTE:
1. REFER TO STRUCTURAL DRAWINGS FOR DEFLECTION REQUIREMENT (SHOWN AS "Y")
2. ONLY (1) LAYER OF TYP "X" GYPSUM WALL BOARD SHOWN FOR CLARITY, SEE PARTITION TYPES FOR ACTUAL NUMBER OF LAYERS REQUIRED (SHOWN AS "Z")

5 HEAD-OF-WALL DEFLECTION DETAIL - NON ACOUSTICAL
SCALE: 3" = 1'-0"

13 RATED WALL TRANSITION DETAIL
SCALE: 1" = 1'-0"

tsk
225 South Arlington Avenue,
Suite A
Reno NV, 89501
phone: 775.857.2949
fax: 775.857.2403
www.tska.com

THESE DRAWINGS AND SPECIFICATIONS ARE THE PROPERTY OF TATE SNYDER KIMSEY ARCHITECTS AND MAY NOT BE REPRODUCED OR USED FOR ANY PURPOSE WITHOUT THE ARCHITECTS WRITTEN CONSENT. AS INSTRUMENTS OF SERVICE, THESE DOCUMENTS ARE NOT FINAL AND READY FOR USE, AND THEREFORE NOT VALID, UNLESS THEY ARE SEALED, SIGNED AND DATED.

Copyright, Ltd 2024

Consultant

PLEASE RECYCLE

Project
SPARKS Fire Station #6

6963 SCHEIDBAR ROAD, SPARKS NEVADA 89436

Job No: 22-043

Owner
CITY OF SPARKS

BID SET

REVISIONS		
REV	DATE	DESCRIPTION

Sheet Title
PARTITION AND PLAN DETAILS

Date: JANUARY 4, 2024
Sheet No:
A2.35

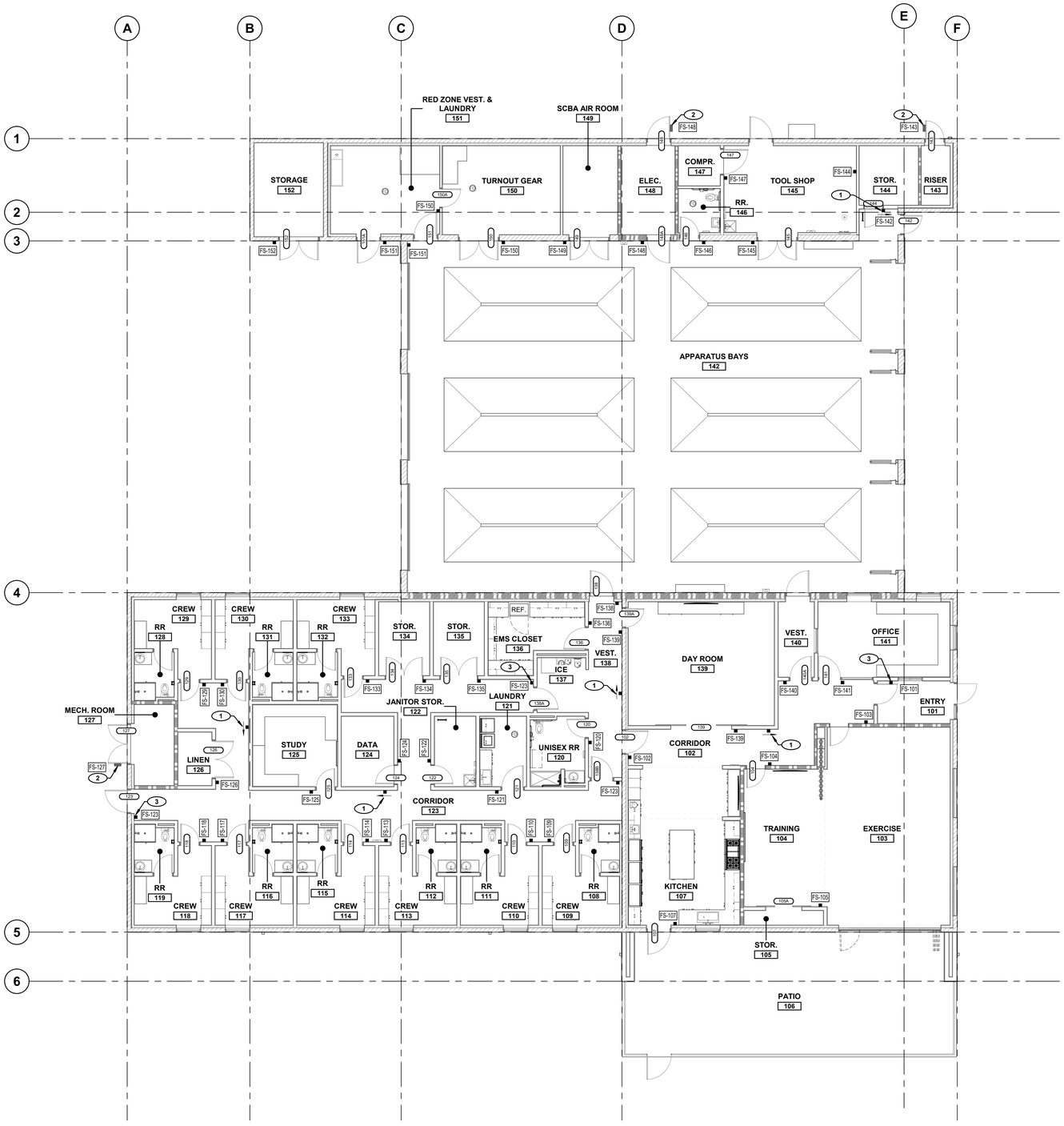

1 SIGNAGE PLAN
SCALE: 1/8" = 1'-0"

NORTH

0' 4' 8' 16'

GENERAL NOTES

1. REFER TO SPECIFICATIONS FOR ADDITIONAL SIGNAGE REQUIREMENTS.
2. INTERNATIONAL SYMBOL PICTOGRAM MUST BE PROVIDED AT ALL ACCESSIBLE RESTROOMS.
3. ALL DIMENSIONS ARE TAKEN FROM FINISHED FACE OF STUD, MASONRY OR CONCRETE UNLESS NOTED OTHERWISE.
4. REFER TO SIGNAGE SCHEDULE FOR SIGNAGE NOT SHOWN ON PLANS.
5. REFER TO SHEET A2.55 FOR SIGNAGE TYPES AND DETAILS.
6. REFER TO DETAIL 12/G1.01 GENERAL ACCESSIBILITY DETAILS FOR SIGN MOUNTING LOCATION AT DOORS.
7. ALL ROOMS TO HAVE EMERGENCY EGRESS SIGNS POSTED NEAR THE DOOR ON THE INTERIOR SIDE OF THE ROOM. SEE SPECIFICATIONS. ARCHITECT TO PROVIDE THE GRAPHICS AT A LATER DATE.
8. REFER TO SHEET A2.01 FOR ROOM FINISH SCHEDULE AND MATERIAL SCHEDULE.

KEYNOTES

1. DIRECTIONAL EXIT SIGNAGE, REFER TO SHEET A2.52 FOR DETAIL
2. DOOR SIGNAGE COMPLIANT REQUIRED BY IFC 2018, REFER SIGNAGE SCHEDULE AND DETAILS
3. EXIT SIGNAGE, TYPICAL, REFER TO SHEET A2.52 FOR DETAIL

tsk

225 South Arlington Avenue,
Suite A
Reno NV, 89501
phone: 775.857.2949
fax: 775.857.2403
www.tska.com

NOLBY M HARPSTEAD
REGISTERED
No. 8775
01/04/2024
ARCHITECT
STATE OF NEVADA

THESE DRAWINGS AND SPECIFICATIONS ARE THE PROPERTY OF TATE SNYDER KIMSEY ARCHITECTS AND MAY NOT BE REPRODUCED OR USED FOR ANY PURPOSE WITHOUT THE ARCHITECTS WRITTEN CONSENT. AS INSTRUMENTS OF SERVICE, THESE DOCUMENTS ARE NOT FINAL AND READY FOR USE, AND THEREFORE NOT VALID, UNLESS THEY ARE SEALED, SIGNED AND DATED.

Copyright, Ltd 2024

Consultant

PLEASE RECYCLE

Project

SPARKS Fire Station #6

6963 SCHEIDBAR ROAD, SPARKS NEVADA 89436

Job No: 22-043

Owner

CITY OF SPARKS

BID SET

REVISIONS		
REV	DATE	DESCRIPTION
A	05.18.23	Review Comments

Sheet Title

SIGNAGE PLAN

Date: JANUARY 4, 2024

Sheet No:

A2.51

MATERIAL: High Impact Polystyrene
THIICKNESS: 0.060 in. (1.5 mm) ASTM D 1593
COLOR: White Letters on Red (conforms to OSHA recommendations)
Red Letters on White (conforms to OSHA recommendations)

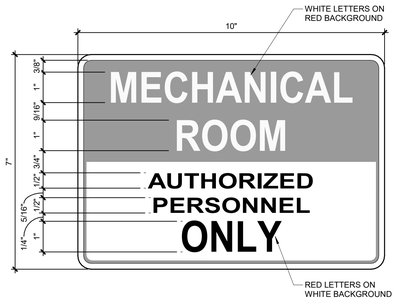

10 TYPE 9 - 2018 IFC COMPLIANT SIGNAGE
SCALE: 6" = 1'-0"

MATERIAL: High Impact Polystyrene
THIICKNESS: 0.060 in. (1.5 mm) ASTM D 1593
COLOR: White Letters on Red (conforms to OSHA recommendations)
Red Letters on White (conforms to OSHA recommendations)

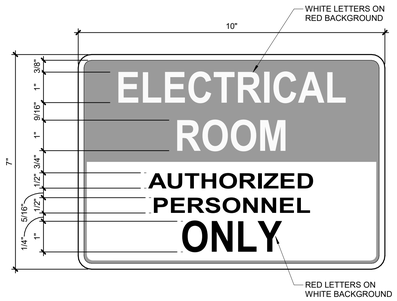

7 TYPE 8 - 2018 IFC COMPLIANT SIGNAGE
SCALE: 6" = 1'-0"

MATERIAL: High Impact Polystyrene
THICKNESS: 0.060 in. (1.5 mm) ASTM D 1593
COLOR: White Letters on Red (conforms to OSHA recommendations)

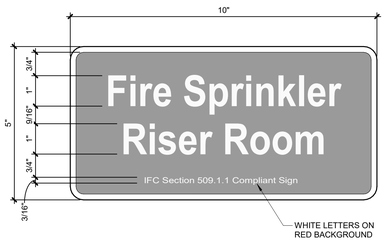

9 TYPE 7 - 2018 IFC COMPLIANT SIGNAGE
SCALE: 6" = 1'-0"

6 TYPE 6 - SIGNAGE
SCALE: 6" = 1'-0"

4 TYPE 4 - RESTROOM WITH SHOWER SIGNAGE
SCALE: 6" = 1'-0"

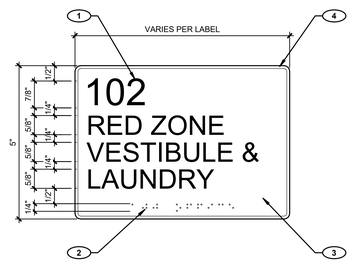

2 TYPE 2 - TYPIC AL SIGNAGE
SCALE: 6" = 1'-0"

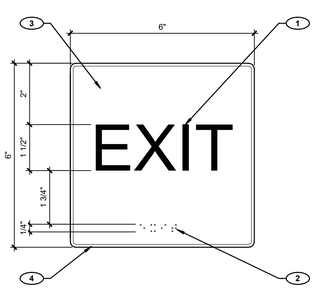

8 TYPE 5 - EXIT SIGNAGE
SCALE: 6" = 1'-0"

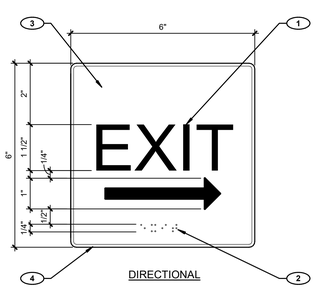

3 TYPE 3 - UNISEX RESTROOM SIGNAGE
SCALE: 6" = 1'-0"

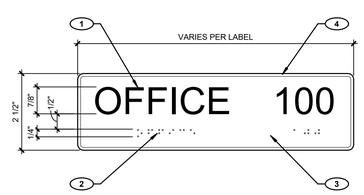

1 TYPE 1 - TYPIC AL SIGNAGE
SCALE: 6" = 1'-0"

SIGNAGE SCHEDULE

NOTE: ALL ROOM NUMBERS AND SIGNAGE TEXT TO BE VERIFIED WITH OWNER PRIOR TO FABRICATION

DOOR			SIGNAGE				
DR NO	RM NO	NAME	NO	TEXT	TAG #	TYPE	NOTES
101A	101	ENTRY					
102	102	CORRIDOR	-	RESIDENTIAL	FS-102	1	
103	103	EXERCISE	-	EXERCISE	FS-103	1	
104	104	TRAINING	-	TRAINING ROOM	FS-104	1	
105A	105	STOR.	-	STORAGE	FS-105	1	
107	107	KITCHEN	-	OUTDOOR PATIO	FS-107	1	
109	109	CREW	1	CREW	FS-109	1	
110	110	CREW	2	CREW	FS-110	1	
113	113	CREW	3	CREW	FS-113	1	
114	114	CREW	4	CREW	FS-114	1	
117	117	CREW	5	CREW	FS-117	1	
118	118	CREW	6	CREW	FS-118	1	
120	120	UNISEX RR	-	RESTROOM AND SHOWER	FS-120	4	
121	121	LAUNDRY	-	LAUNDRY ROOM	FS-121	1	
122	122	JANITOR STOR.	-	JANITOR STORAGE / ROOF ACCESS	FS-122	2	
123	123	CORRIDOR	-	EXIT	FS-123	5	
124	124	DATA	-	DATA ROOM	FS-124	1	
125	125	STUDY	-	STUDY ROOM	FS-125	1	
126	126	LINEN	-	LINEN	FS-126	1	
127	127	MECH. ROOM	-	-	FS-127	9	CODE REQUIRED (ON DOOR)
129	129	CREW	7	CREW	FS-129	1	
130	130	CREW	8	CREW	FS-130	1	
133	133	CREW	9	CREW	FS-133	1	
134	134	STOR.	-	STORAGE 1	FS-134	1	
135	135	STOR.	-	STORAGE 2	FS-135	1	
136	136	EMS CLOSET	-	EMS CLOSET	FS-136	1	
138	142	APPARATUS BAYS	-	APPARATUS BAYS	FS-138	2	
138A	123	CORRIDOR	-	EXIT	FS-123	5	
138B	123	CORRIDOR	-	EXIT	FS-123	5	
139	139	DAY ROOM	-	DAY ROOM	FS-139	1	
139A	139	DAY ROOM	-	DAY ROOM	FS-139	1	
140A	140	VEST.	-	APPARATUS BAYS	FS-140	2	
141	141	OFFICE	-	OFFICE	FS-141	1	
142	142	APPARATUS BAYS	-	EXIT	FS-142	5	DIRECTIONAL
143	143	RISER	-	-	FS-143	7	CODE REQUIRED (ON DOOR)
144	144	STOR.	-	STORAGE ROOM	FS-144	1	
145	145	TOOL SHOP	-	TOOL SHOP	FS-145	1	
146	146	RR.	-	RESTROOM	FS-146	3	
147	147	COMPR.	-	COMPRESSOR	FS-147	1	
148	148	ELEC.	-	-	FS-148	8	CODE REQUIRED (ON DOOR)
148A	148	ELEC.	-	ELECTRICAL ROOM	FS-148	1	
149	149	SCBA AIR ROOM	-	SCBA AIR ROOM	FS-149	2	
150	150	TURNOUT GEAR	-	TURNOUT GEAR	FS-150	1	
150A	150	TURNOUT GEAR	-	TURNOUT GEAR	FS-150	1	
151	151	RED ZONE VEST. & LAUNDRY	-	RED ZONE VESTIBULE & LAUNDRY	FS-151	2	
151A	151	RED ZONE VEST. & LAUNDRY	-	RED ZONE VESTIBULE & LAUNDRY	FS-151	2	@ EXTERIOR SIDE OF ROOM
152	152	STORAGE	-	STORAGE ROOM	FS-152	2	

GENERAL NOTES

1. ALL DIMENSIONS ARE TAKEN FROM FINISHED FACE OF STUD, MASONRY OR CONCRETE UNLESS NOTED OTHERWISE.
2. REFER TO SPECIFICATIONS FOR ADDITIONAL SIGNAGE REQUIREMENTS.
3. REFER TO DETAIL 12/G1.01 GENERAL ACCESSIBILITY DETAILS FOR SIGN MOUNTING LOCATION AT DOORS.

KEYNOTES

1. 1/32" RAISED LETTERS AND PICTOGRAMS SCREEN TIP HELVETICA FONT
2. 1/32" RAISED GRADE II BRAILLE TO BE SAME COLOR AS MESSAGE PANEL
3. TYPICAL BACKGROUND PAINT COLOR BLUE
4. RAISED BORDER - BRUSHED ALUMINUM FRAME, HORIZONTAL GRAIN

tsk
225 South Arlington Avenue,
Suite A
Reno NV, 89501
phone: 775.857.2949
fax: 775.857.2403
www.tska.com

THESE DRAWINGS AND SPECIFICATIONS ARE THE PROPERTY OF TATE SNYDER KIMSEY ARCHITECTS AND MAY NOT BE REPRODUCED OR USED FOR ANY PURPOSE WITHOUT THE ARCHITECTS WRITTEN CONSENT. AS INSTRUMENTS OF SERVICE, THESE DOCUMENTS ARE NOT FINAL AND READY FOR USE, AND THEREFORE NOT VALID, UNLESS THEY ARE SEALED, SIGNED AND DATED.

Copyright, Ltd 2024

Consultant

PLEASE RECYCLE

Project
SPARKS Fire Station #6

6963 SCHEIDBAR ROAD, SPARKS NEVADA 89436

Job No: 22-043

Owner
CITY OF SPARKS

BID SET

REVISIONS		
REV	DATE	DESCRIPTION
A	05.18.23	Review Comments

Sheet Title
SIGNAGE SCHEDULE, SIGNAGE TYPES & DETAILS

Date: JANUARY 4, 2024
Sheet No:
A2.52

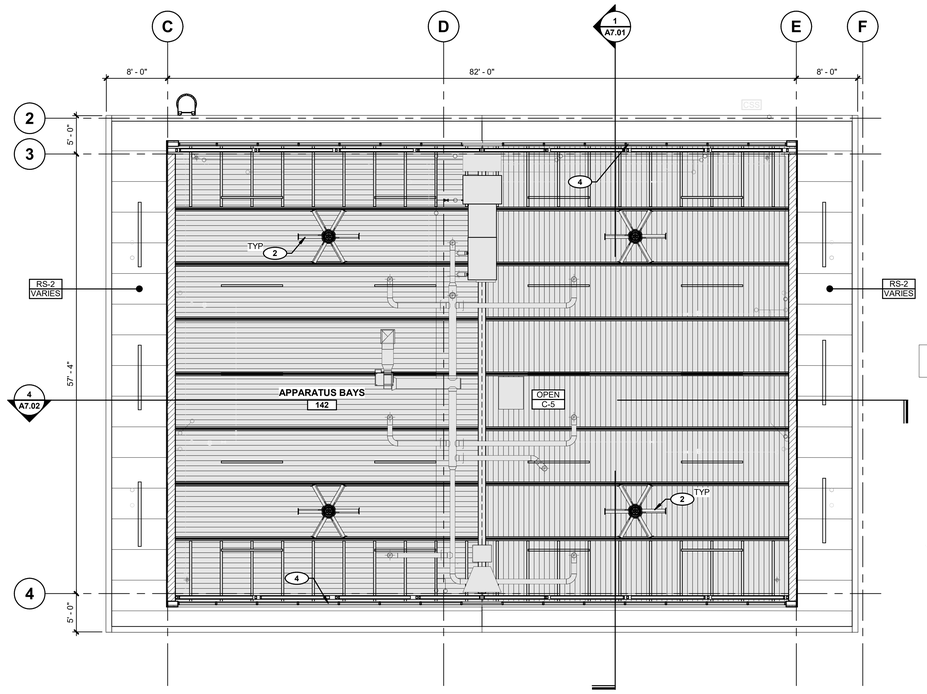

3 REFLECTED CEILING PLAN - HIGH ROOF
SCALE: 1/8" = 1'-0"

NORTH 0' 4' 8' 16'

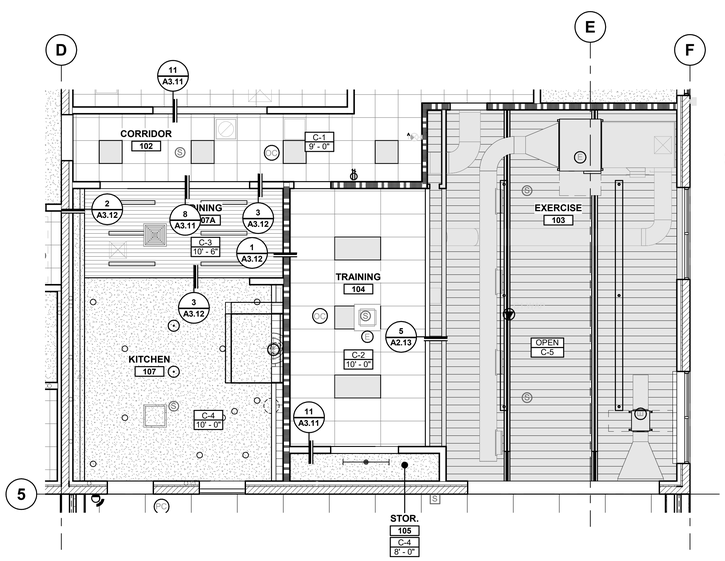

2 ENLARGED REFLECTED CEILING PLAN
SCALE: 3/16" = 1'-0"

NORTH 0' 3' 5' 11'

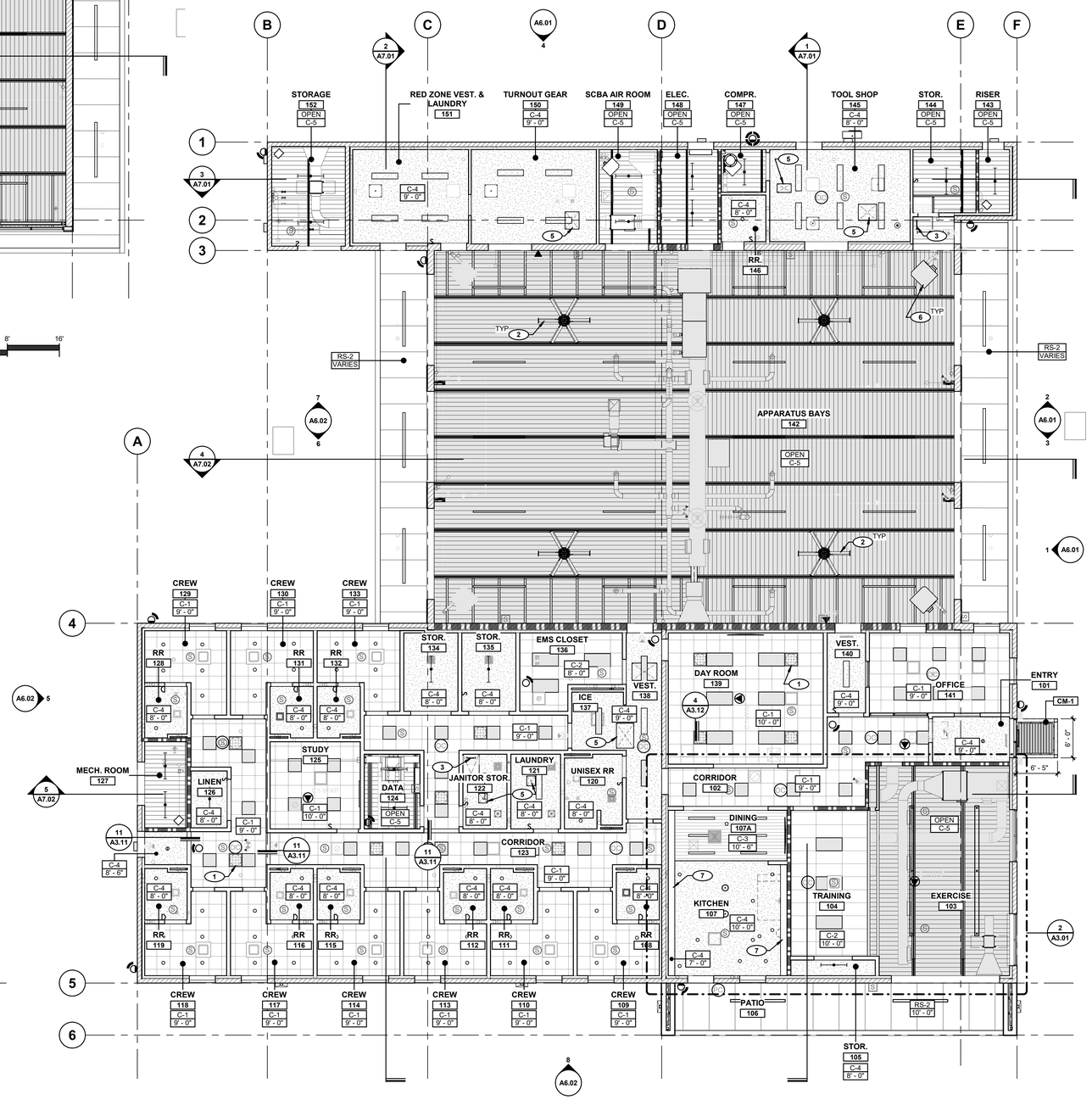

1 REFLECTED CEILING PLAN
SCALE: 1/8" = 1'-0"

NORTH 0' 4' 8' 16'

GENERAL NOTES

1. REFER TO ENLARGED PLANS AND FINISH SCHEDULE FOR CEILING TYPE AND FINISH.
2. REFER TO SHEET A3.11 FOR ALL CEILING DETAILS AND MATERIAL SCHEDULE.
3. SPRINKLER HEADS TO BE CENTERED IN ALL CORRIDORS AND IN CEILING TILES WHERE TILES OCCUR.
4. REFER TO ROOM FINISH SCHEDULE FOR CEILING HEIGHTS AND FINISHES NOT SHOWN ON PLAN.
5. MAINTAIN MINIMUM 3" CLEAR BETWEEN LIGHTS, DIFFUSERS, SPEAKERS, ETC.
6. REFER TO ROOM FINISH SCHEDULE FOR COLOR OF EXPOSED STRUCTURE TO BE PAINTED.
7. COORDINATE LOCATIONS OF CAMERAS TO ENSURE THAT CAMERA VIEWS ARE NOT OBSTRUCTED.
8. CEILING / SOFFIT ELEVATIONS ARE BASED FROM FINISH FLOOR ELEVATIONS. (NOTE: FINISH FLOOR MAY VARY THROUGHOUT THE BUILDING)
9. REFER TO SHEET A1.41 FOR FURNITURE AND EQUIPMENT SCHEDULE.
10. PROVIDE SHADOW MOLD TRIM AS SHOWN ON DETAIL SHEET WHERE ADJACENT CEILING ALIGNS WITH SOFFIT.
11. CASTLE-CUT GYPSUM BOARD TO DECK AND SEAL AT AREAS WITHOUT CEILINGS, UNLESS NOTED OTHERWISE.
12. ALL EXPOSED FASTENERS ON THE UNDERSIDE OF DECK TO BE CUT TO THE SAME LENGTH AND PAINTED TO MATCH THE STRUCTURE.

KEYNOTES

1. TUBULAR SKYLIGHT CEILING DIFFUSER WITH DIMMER, REFER TO DETAIL 4/A3.12
2. HIGH VOLUME, LOW VELOCITY FAN, REFER TO ELECTRICAL DRAWINGS
3. ROOF ACCESS LADDER AND HATCH, REFER TO DETAIL 14/A4.11
4. CLERESTORY WINDOW , REFER TO WINDOW TYPES
5. HARD-LID CEILING ACCESS PANEL
6. UNIT HEATER, REFER TO MECHANICAL DRAWINGS
7. SOFFIT ABOVE UPPER CABINET, REFER TO CASEWORK ELEVATION

LEGEND

- 24" x 24" ACOUSTIC CEILING TILE **(ACT-1)** **C-1**
- 24" x 48" ACOUSTIC CEILING TILE **(ACT-2)** **C-2**
- LINEAR METAL CEILING **C-3**
- PAINTED GYPSUM BOARD **C-4 (GYP)**
- EXPOSED DECK (NON-ACOUSTIC) **C-5**
- EXPOSED DECK (ACOUSTIC) **C-5**
- PHENOLIC PANEL **RS-2**
- 24" x 24" & 12" x 12" SUPPLY DIFFUSER
- 24" x 24" RETURN GRILLE
- 24" x 24" & 12" x 12" EXHAUST GRILLE
- SPEAKER
- OCCUPANCY SENSOR
- TUBULAR SKYLIGHT DIFFUSER
- SUSPENDED LED STRIP FIXTURE
- LINEAR STRIP FIXTURE
- 2'x4' TROFFER FIXTURE
- 2'x2' TROFFER FIXTURE
- LED 6" ROUND DOWNLIGHT
- LINEAR LUMINAIRES
- ACCESS PANEL
- SECURITY CAMERA
- EXIT SIGN

tsk
225 South Arlington Avenue,
Suite A
Reno NV, 89501
phone: 775.857.2949
fax: 775.857.2403
www.tska.com

NOLBY M HARPSTEAD
REGISTERED
No. 8775
01/04/2024
ARCHITECT
STATE OF NEVADA

THESE DRAWINGS AND SPECIFICATIONS ARE THE PROPERTY OF TATE SNYDER KIMSEY ARCHITECTS AND MAY NOT BE REPRODUCED OR USED FOR ANY PURPOSE WITHOUT THE ARCHITECTS WRITTEN CONSENT. AS INSTRUMENTS OF SERVICE, THESE DOCUMENTS ARE NOT FINAL AND READY FOR USE, AND THEREFORE NOT VALID, UNLESS THEY ARE SEALED, SIGNED AND DATED.

Copyright, Ltd 2024

Consultant

PLEASE RECYCLE

Project
SPARKS Fire Station #6

6963 SCHEIDBAR ROAD, SPARKS NEVADA 89436

Job No: 22-043

Owner
CITY OF SPARKS

CITY OF SPARKS FIRE DEPARTMENT Est. 1905

BID SET

REVISIONS		
REV	DATE	DESCRIPTION

Sheet Title
REFLECTED CEILING PLAN

Date: JANUARY 4, 2024
Sheet No:
A3.01

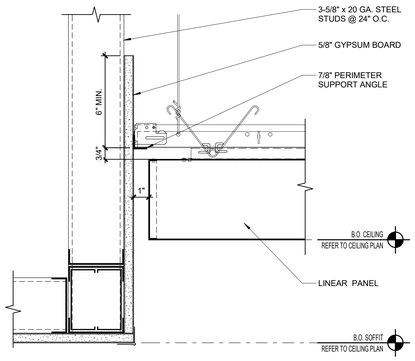

20 SOFFIT DETAIL AT LINEAR CEILING SYSTEM
SCALE: 3" = 1'-0"

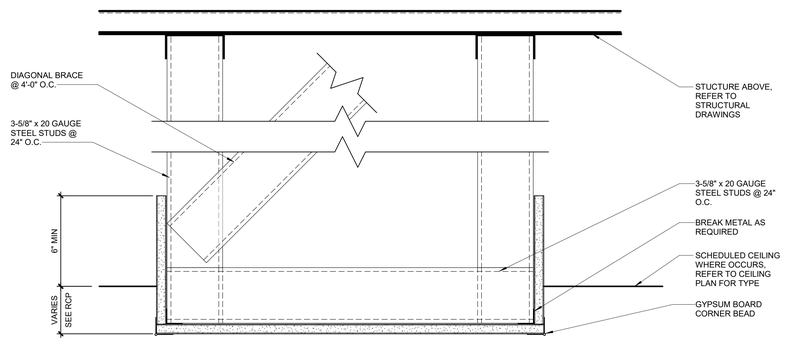

16 SOFFIT DETAIL
SCALE: 3" = 1'-0"

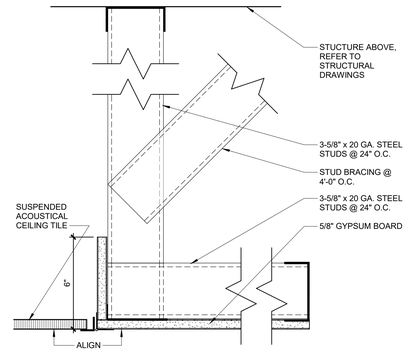

8 SOFFIT WITH FLUSHED CEILING DETAIL
SCALE: 3" = 1'-0"

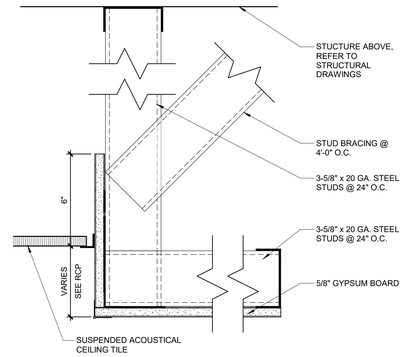

4 CEILING TO SOFFIT TERMINATION
SCALE: 3" = 1'-0"

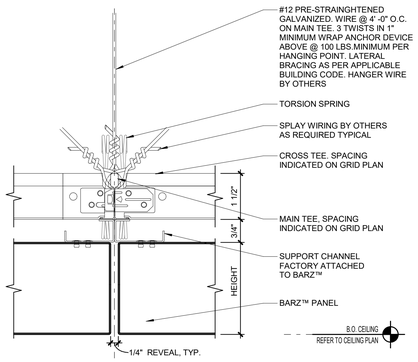

19 PANEL JOINT DETAIL, TYPICAL
SCALE: 6" = 1'-0"

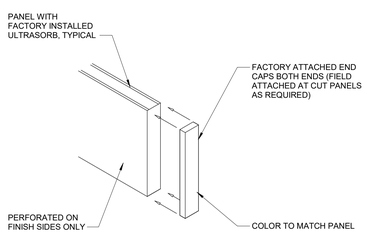

15 LINEAR / ANGLED END CAP DETAIL
SCALE: 12" = 1'-0"

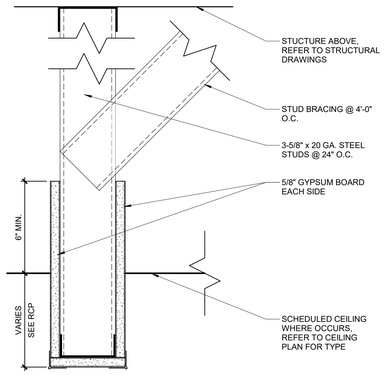

11 BULKHEAD SOFFIT DETAIL
SCALE: 3" = 1'-0"

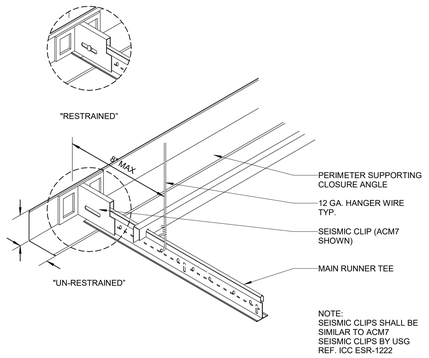

7 CEILING DETAIL WITH SEISMIC CLIPS
SCALE: 6" = 1'-0"

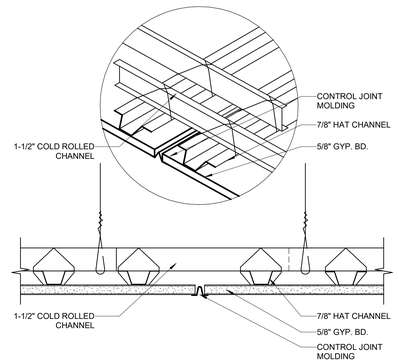

3 GYPSUM BOARD CEILING CONTROL JOINT
SCALE: 3" = 1'-0"

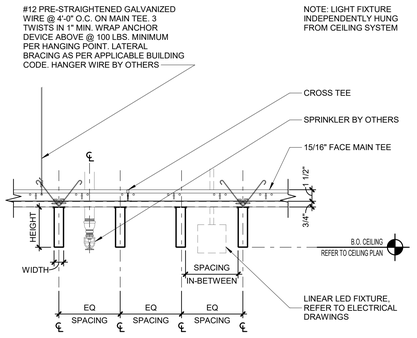

18 PANEL FIXTURE/SPRINKLER DETAIL, TYP.
SCALE: 1 1/2" = 1'-0"

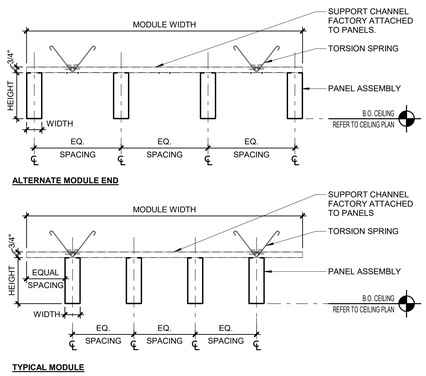

17 PANEL MODULE DETAIL, TYPICAL
SCALE: 1 1/2" = 1'-0"

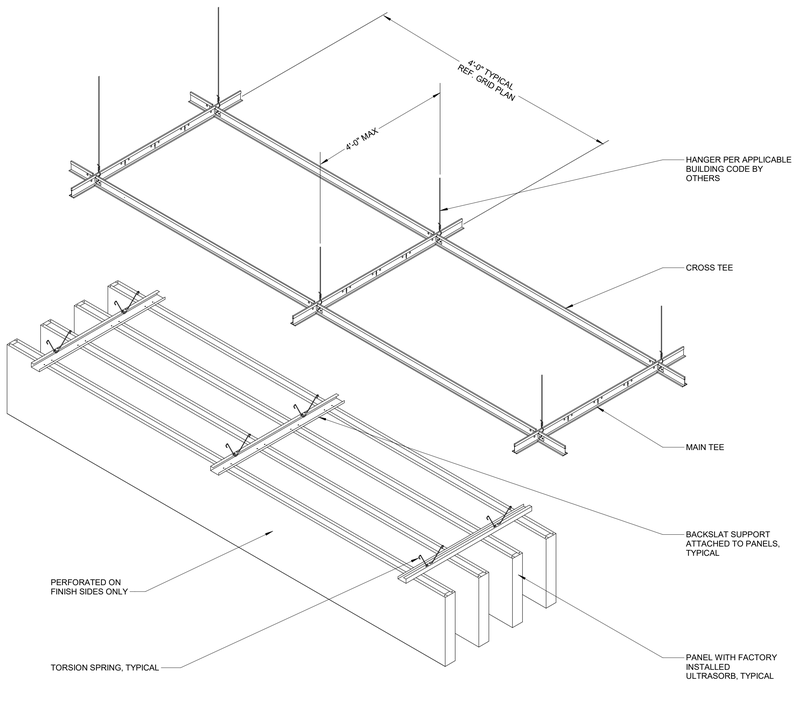

13 BARZ SYSTEM CASSETTE ASSEMBLY, TYPICAL
SCALE: 3/4" = 1'-0"

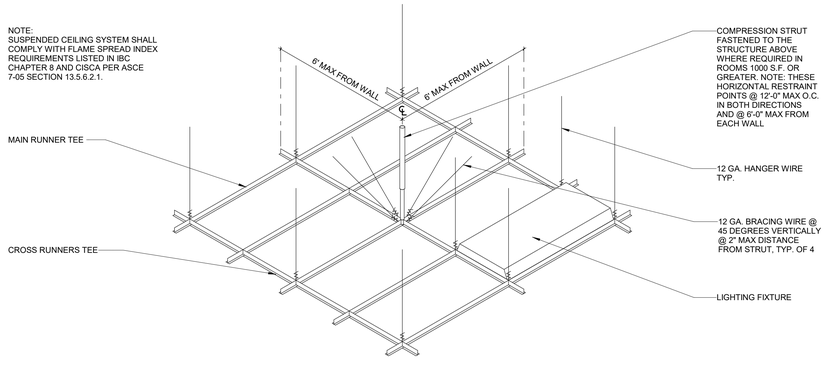

6 SUSPENDED ACOUSTIC CEILING TILE DETAIL
SCALE: 1/2" = 1'-0"

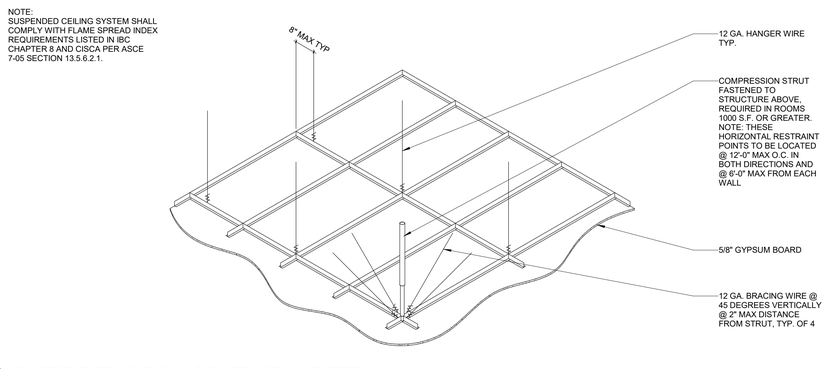

5 SUSPENDED GYPSUM BOARD CEILING DETAIL
SCALE: 1/2" = 1'-0"

tsk
225 South Arlington Avenue,
Suite A
Reno NV, 89501
phone: 775.857.2949
fax: 775.857.2403
www.tska.com

THESE DRAWINGS AND SPECIFICATIONS ARE THE PROPERTY OF TATE SNYDER KIMSEY ARCHITECTS AND MAY NOT BE REPRODUCED OR USED FOR ANY PURPOSE WITHOUT THE ARCHITECTS WRITTEN CONSENT. AS INSTRUMENTS OF SERVICE, THESE DOCUMENTS ARE NOT FINAL AND READY FOR USE, AND THEREFORE NOT VALID, UNLESS THEY ARE SEALED, SIGNED AND DATED.

Copyright, Ltd 2024

Consultant

PLEASE RECYCLE

Project
SPARKS Fire Station #6

6963 SCHEIDBAR ROAD, SPARKS NEVADA 89436

Job No: 22-043

Owner
CITY OF SPARKS

BID SET

REVISIONS		
REV	DATE	DESCRIPTION

Sheet Title
CEILING DETAILS

Date: JANUARY 4, 2024
Sheet No:
A3.11

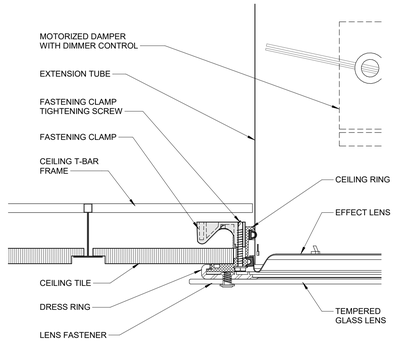

4 SKYLIGHT DIFFUSER DETAIL
SCALE: 6" = 1'-0"

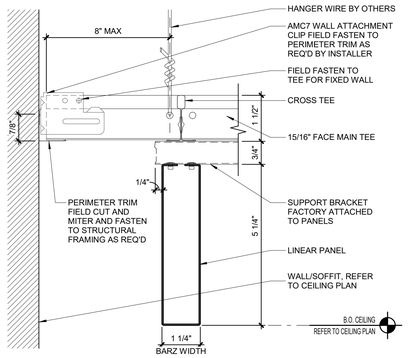

3 PERIMETER END DETAIL - PERPENDICULAR
SCALE: 6" = 1'-0"

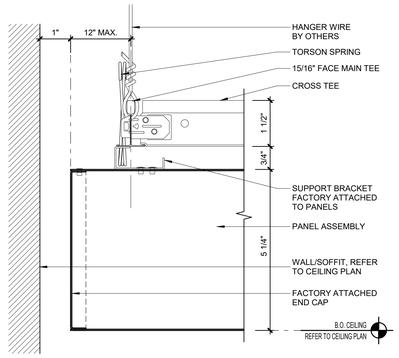

2 PERIMETER END DETAIL - PARALLEL
SCALE: 6" = 1'-0"

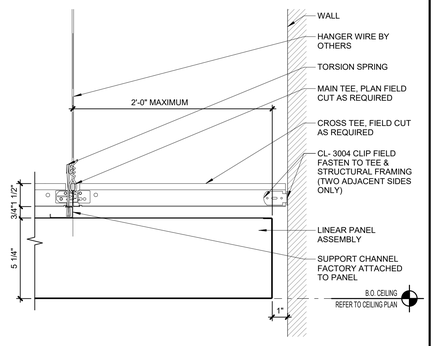

1 PERIMETER DETAIL - GRID TO WALL CONN.
SCALE: 3" = 1'-0"

tsk
225 South Arlington Avenue,
Suite A
Reno NV, 89501
phone: 775.857.2949
fax: 775.857.2403
www.tska.com

THESE DRAWINGS AND SPECIFICATIONS ARE THE PROPERTY OF TATE SNYDER KIMSEY ARCHITECTS AND MAY NOT BE REPRODUCED OR USED FOR ANY PURPOSE WITHOUT THE ARCHITECTS WRITTEN CONSENT. AS INSTRUMENTS OF SERVICE, THESE DOCUMENTS ARE NOT FINAL AND READY FOR USE, AND THEREFORE NOT VALID, UNLESS THEY ARE SEALED, SIGNED AND DATED.

Copyright, Ltd 2024

Consultant

PLEASE RECYCLE

Project
SPARKS Fire Station #6

6963 SCHEIDBAR ROAD, SPARKS NEVADA 89436

Job No: 22-043

Owner
CITY OF SPARKS

BID SET

REVISIONS		
REV	DATE	DESCRIPTION

Sheet Title
CEILING DETAILS

Date: JANUARY 4, 2024
Sheet No:
A3.12

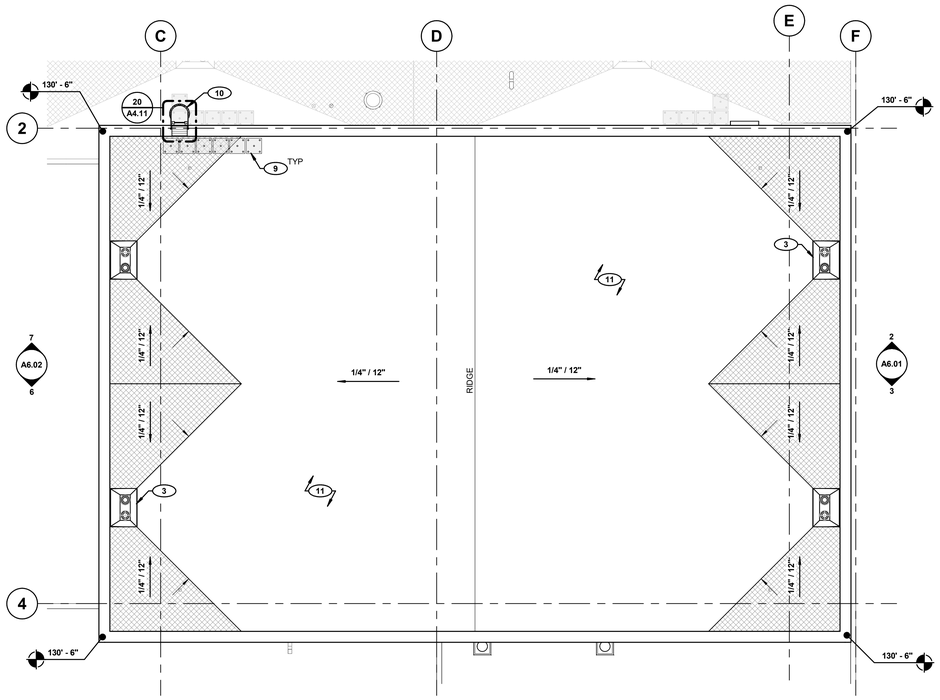

2 ROOF PLAN - HIGH ROOF
SCALE: 1/8" = 1'-0"

NORTH 0' 4' 8' 16'

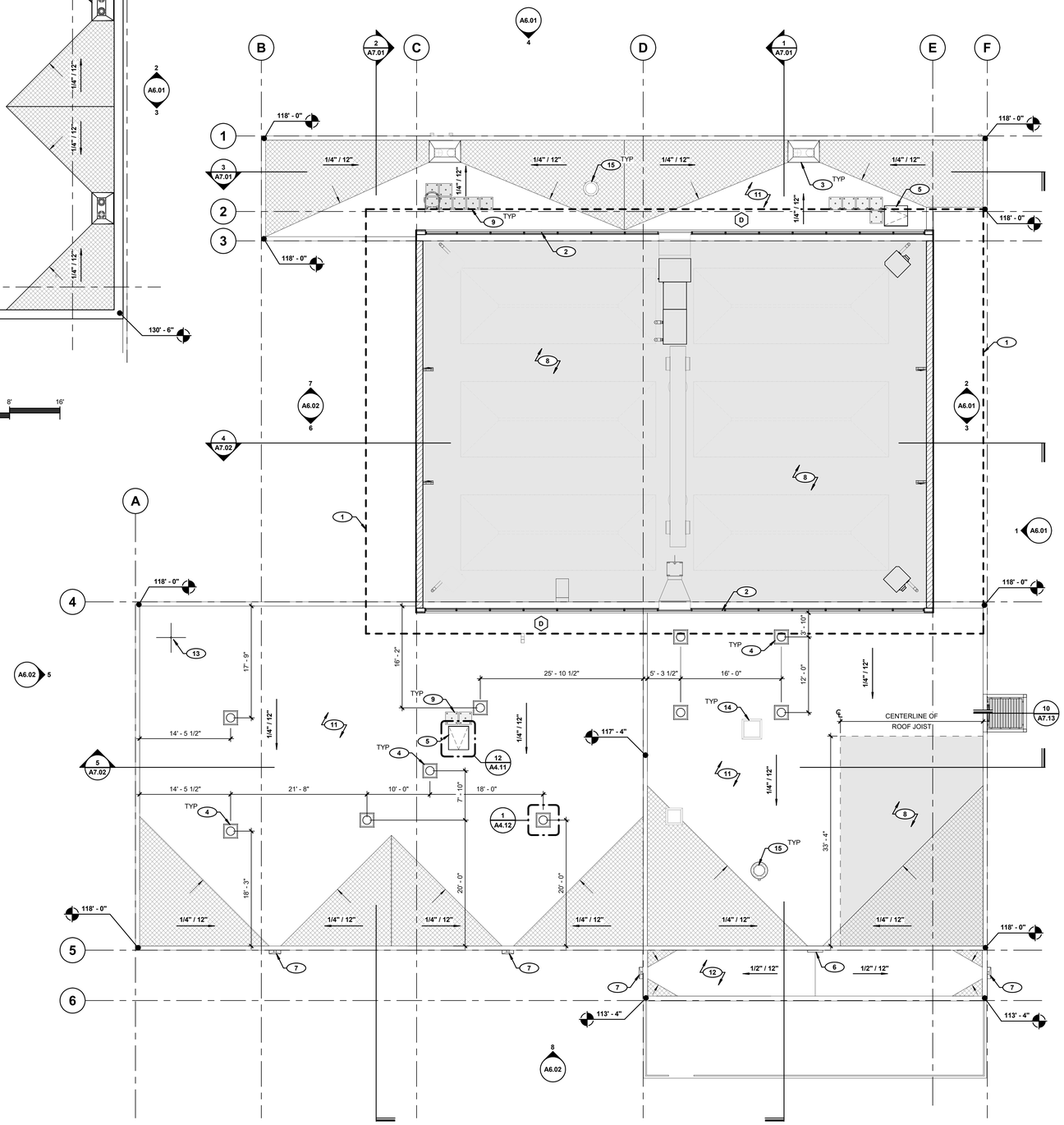

1 ROOF PLAN - LOW ROOF
SCALE: 1/8" = 1'-0"

NORTH 0' 4' 8' 16'

GENERAL NOTES

1. ALL TOP OF PARAPET (T.O.P.) AND BOTTOM OF DECK (B.O.D.) ELEVATIONS ARE FROM FINISH FLOOR ELEVATION. SEE EXTERIOR ELEVATIONS FOR TOP OF WALL HEIGHTS.
2. REFER TO MECHANICAL PLANS FOR ROOF TOP MECHANICAL EQUIPMENT.
3. ALL ROOF DRAINS SHALL BE A MINIMUM OF 2'-0" CLEAR FROM ALL PARAPETS OR WALL.
4. SLOPE ROOF AS SHOWN. DIRECTIONAL ARROWS ON ROOF PLAN INDICATES DIRECTION OF ROOF SLOPE TO ROOF DRAIN.
5. ALL MAIN ROOF DRAINS SHALL BE LOCATED AT THE LOWEST POSSIBLE ROOF ELEVATION. NOTIFY THE ARCHITECT OF ANY CONFLICTS PRIOR TO ROOF DRAIN AND PIPING INSTALLATION.
6. CRICKET ALL ROOF TOP MECHANICAL UNITS, SKYLIGHTS, HATCHES, ETC., SLOPE TO BE A MINIMUM OF 1/2" PER FOOT.
7. THERE ARE NO FLAT SPOTS ON THE ROOF, ALL AREAS SHALL BE SLOPED, TYPICAL.
8. PROVIDE 3'-0" X 3'-0" TRAFFIC PAD AT TOP AND BOTTOM OF ROOF LADDER.
9. ALL VALLEYS TO SLOPE A MINIMUM OF 1/2" PER FOOT TOWARDS DRAIN.
10. ALL EXPOSED FASTENERS TO BE CUT TO THE SAME LENGTH AND PAINTED TO MATCH THE STRUCTURE.
11. NO WORK, INCLUDING STAGING OR ACCESS TO OTHER PORTIONS OF THE FINISHED ROOF MEMBRANE, SHALL BE PERMITTED. IF STAGING, ACCESS, OR WORK IS REQUIRED ON THE FINISHED MEMBRANE, THE CONTRACTOR SHALL PROVIDE SURFACE PROTECTION. SEE SPECIFICATIONS.

KEYNOTES

1. ROOF LINE ABOVE (SHOWN DASHED), REFER TO 2/A4.01 THIS SHEET
2. CLERESTORY WINDOW ABOVE, REFER TO EXTERIOR ELEVATIONS
3. ROOF DRAIN WITH OVERFLOW DRAIN, REFER TO PLUMBING DRAWINGS
4. TUBULAR SKYLIGHT WITH DIMMER
5. ROOF ACCESS HATCH, REFER TO ROOF DETAILS
6. SCUPPER ROOF DRAIN, REFER TO PLUMBING DRAWINGS
7. ROOF SCUPPER WITH COLLECTOR BOX AND DOWNSPOUT, REFER TO PLUMBING DRAWINGS
8. ACOUSTICAL METAL DECK 'TYPE C', REFER TO DETAIL 3/A4.11
9. TRAFFIC PAD, REFER TO ROOF DETAILS
10. TUBULAR CAGE LADDER, REFER TO ROOF DETAILS
11. SINGLE-PLY ROOFING SYSTEM TYPE 'A', REFER TO DETAIL 1/A4.11
12. UNINSULATED ROOFING SYSTEM TYPE 'B', REFER TO DETAIL 2/A4.11
13. RADIO MAST ANTENNA/REPEATER, REFER TO TECHNOLOGY DRAWINGS, REFER TO DETAIL 3/A4.13
14. GRAVITY INTAKE, REFER TO MECHANICAL DRAWINGS
15. ROOF EXHAUST FAN, REFER TO MECHANICAL DRAWINGS

LEGEND

- CRICKET
- WALKWAY ROOF PAD
- LINE OF SOFFIT ABOVE
- CRICKET TO SLOPE TOWARDS VALLEY
- ACOUSTICAL DECK

tsk

225 South Arlington Avenue,
Suite A
Reno NV, 89501
phone: 775.857.2949
fax: 775.857.2403
www.tska.com

KOLBY M HARPSTEAD
REGISTERED
No. 8775
01/04/2024
ARCHITECT
STATE OF NEVADA

THESE DRAWINGS AND SPECIFICATIONS ARE THE PROPERTY OF TATE SNYDER KIMSEY ARCHITECTS AND MAY NOT BE REPRODUCED OR USED FOR ANY PURPOSE WITHOUT THE ARCHITECTS WRITTEN CONSENT. AS INSTRUMENTS OF SERVICE, THESE DOCUMENTS ARE NOT FINAL AND READY FOR USE, AND THEREFORE NOT VALID, UNLESS THEY ARE SEALED, SIGNED AND DATED.

Copyright, Ltd 2024

Consultant

PLEASE RECYCLE

Project

SPARKS Fire Station #6

6963 SCHEIDBAR ROAD, SPARKS NEVADA 89436

Job No: 22-043

Owner

CITY OF SPARKS

CITY OF SPARKS FIRE DEPARTMENT Est. 1905

BID SET

REVISIONS

REV	DATE	DESCRIPTION

Sheet Title

OVERALL ROOF PLAN

Date: JANUARY 4, 2024

Sheet No:

A4.01

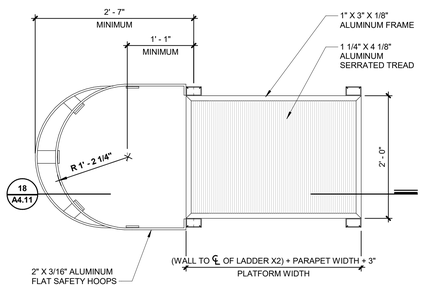

20 TUBULAR CAGE LADDER PLAN
SCALE: 1" = 1'-0"

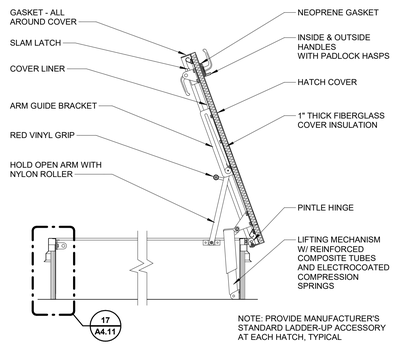

16 ROOF HATCH SECTION
SCALE: 1" = 1'-0"

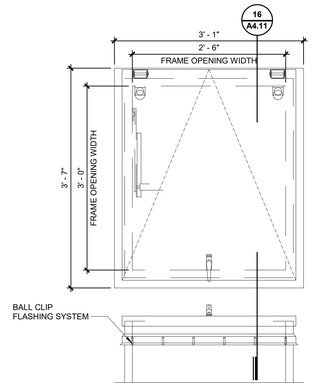

12 ROOF HATCH
SCALE: 1" = 1'-0"

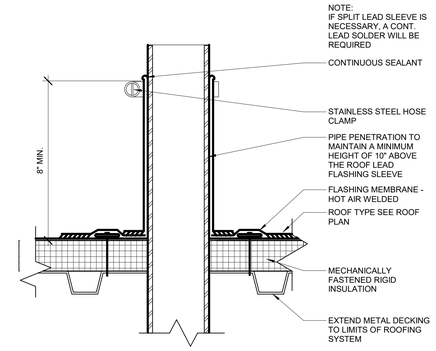

8 TYPICAL PIPE PENETRATION
SCALE: 3" = 1'-0"

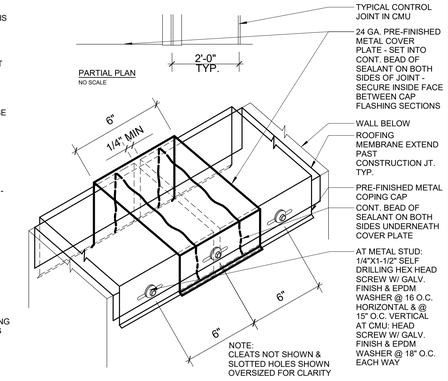

4 COPING JOINT COVER PLATE
SCALE: 3" = 1'-0"

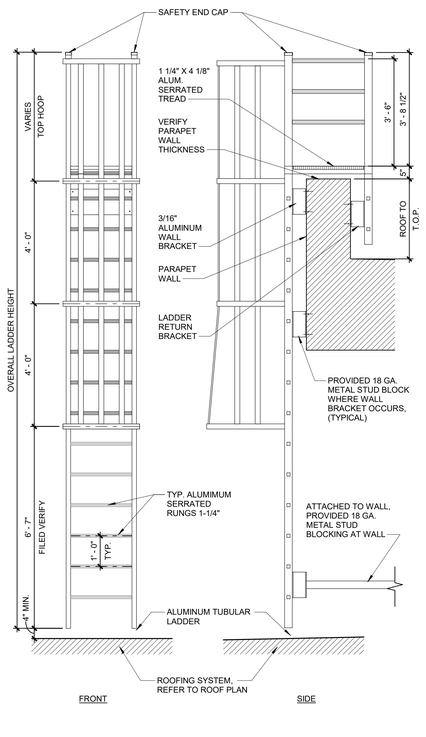

18 TUBULAR CAGE LADDER ELEVATIONS
SCALE: 1/2" = 1'-0"

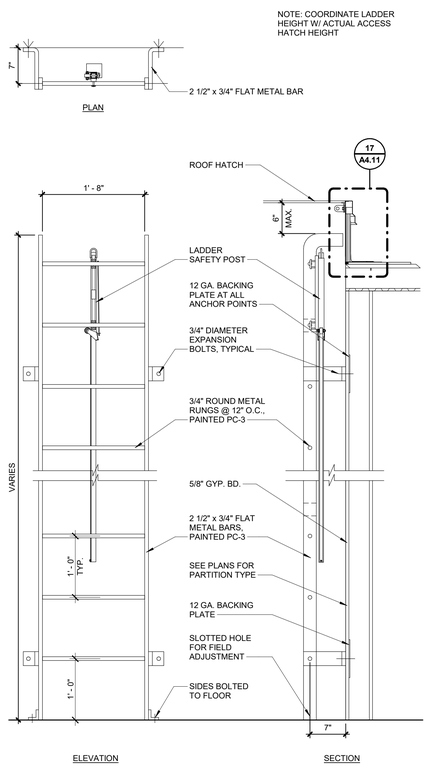

14 ROOF ACCESS LADDER AT HATCH
SCALE: 1" = 1'-0"

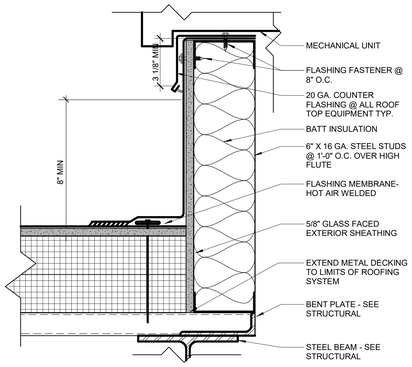

11 TYPICAL EQUIPMENT CURB
SCALE: 3" = 1'-0"

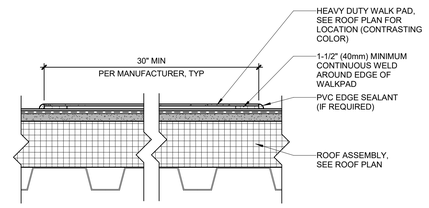

NOTES:
1. DETAIL TO BE USED IN CONJUNCTION WITH GUIDE SPECIFICATIONS CONTAINING REQUIREMENTS FOR NAILERS, INSULATION, ETC.
2. PVC EDGE SEALANT IS REQUIRED ON ALL CUT OR NON-ENCAPSULATED EDGES OF REINFORCED MEMBRANE. THIS INCLUDES FACTORY CUT MEMBRANE.
3. THE WALKPADS MUST NOT BE INSTALLED OVER FIELD SEAMS AND FASTENER ROWS AND MUST BE GAPPED FROM THESE AREAS A MINUMUM OF 6" (150mm).
4. MINIMUM OF 6" GAP @ ALL VALLEYS AND OTHER DRAINING FLOW LINES.
5. PROVIDE 2" GAP WHERE WALKPAD CHANGES DIRECTION.

7 TRAFFIC PAD DETAIL
SCALE: 3" = 1'-0"

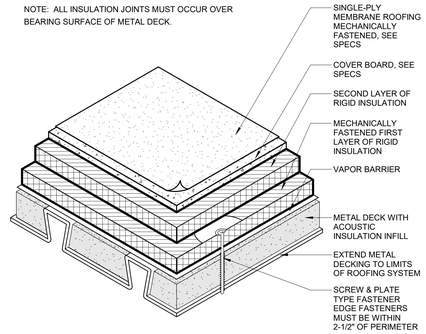

3 ROOF TYPE 'C'
SCALE: 3" = 1'-0"

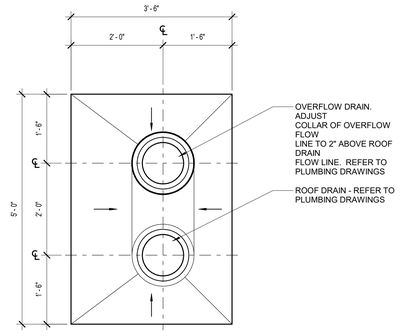

10 ROOF DRAIN/OVERFLOW DRAIN PLAN VIEW
SCALE: 3/4" = 1'-0"

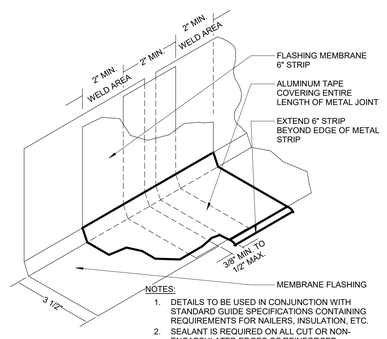

NOTES:
1. DETAILS TO BE USED IN CONJUNCTION WITH STANDARD GUIDE SPECIFICATIONS CONTAINING REQUIREMENTS FOR NAILERS, INSULATION, ETC.
2. SEALANT IS REQUIRED ON ALL CUT OR NON-ENCAPSULATED EDGES OF REINFORCED MEMBRANE.
3. A HEAT GUN MUST BE USED TO FACILITATE WELDING AT THE METAL BENDS.

6 FLASHING DETAIL
SCALE: 3" = 1'-0"

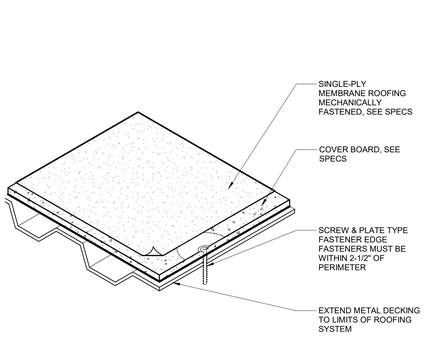

2 ROOF TYPE 'B' (UNINSULATED - PATIO ONLY)
SCALE: 3" = 1'-0"

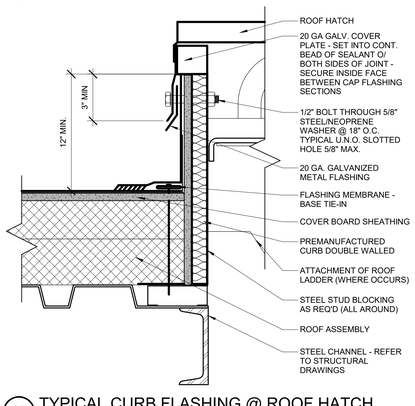

17 TYPICAL CURB FLASHING @ ROOF HATCH
SCALE: 3" = 1'-0"

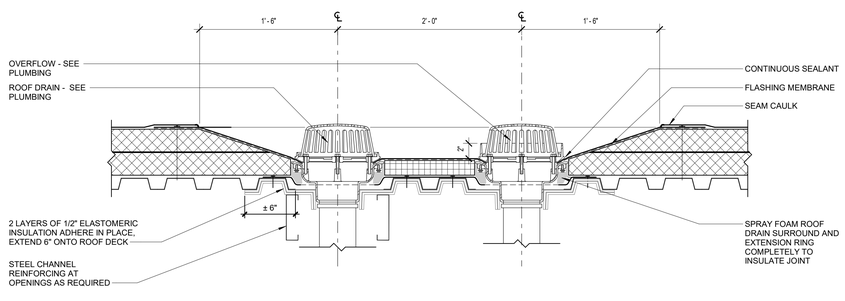

13 RD/OD SECTION
SCALE: 1 1/2" = 1'-0"

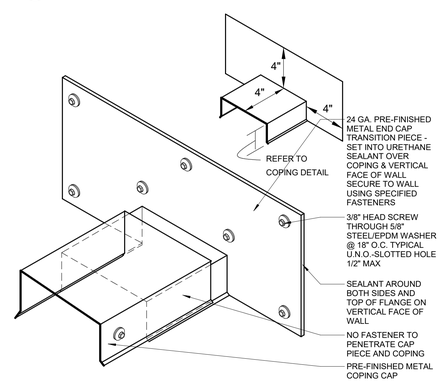

5 END CAP TRANSITION PIECE
SCALE: 3" = 1'-0"

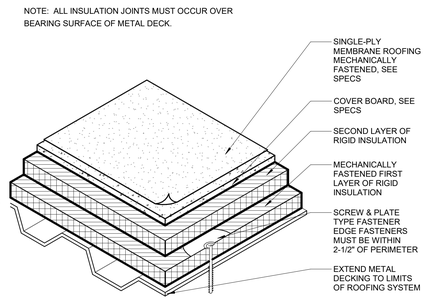

1 ROOF TYPE 'A'
SCALE: 3" = 1'-0"

tsk
225 South Arlington Avenue,
Suite A
Reno NV, 89501
phone: 775.857.2949
fax: 775.857.2403
www.tska.com

THESE DRAWINGS AND SPECIFICATIONS ARE THE PROPERTY OF TATE SNYDER KIMSEY ARCHITECTS AND MAY NOT BE REPRODUCED OR USED FOR ANY PURPOSE WITHOUT THE ARCHITECTS WRITTEN CONSENT. AS INSTRUMENTS OF SERVICE, THESE DOCUMENTS ARE NOT FINAL AND READY FOR USE, AND THEREFORE NOT VALID, UNLESS THEY ARE SEALED, SIGNED AND DATED.

Copyright, Ltd 2024

Consultant

PLEASE RECYCLE

Project
SPARKS Fire Station #6

6963 SCHEIDBAR ROAD, SPARKS NEVADA 89436

Job No: 22-043

Owner
CITY OF SPARKS

BID SET

REVISIONS		
REV	DATE	DESCRIPTION

Sheet Title
ROOF DETAILS

Date: JANUARY 4, 2024

Sheet No:
A4.11

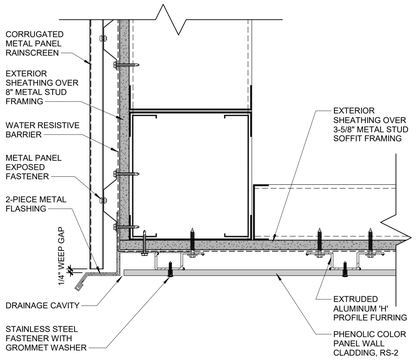

20 SOFFIT TRANSITION AT PATIO
SCALE: 3" = 1'-0"

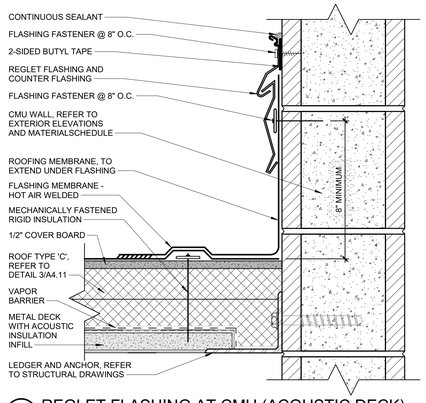

16 REGLET FLASHING AT CMU (ACOUSTIC DECK)
SCALE: 3" = 1'-0"

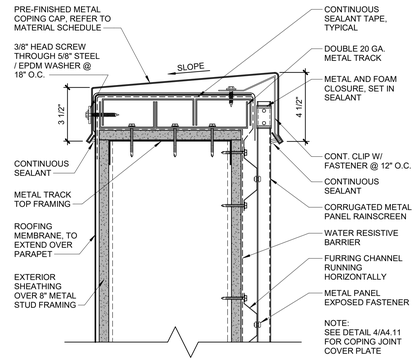

12 COPING AT METAL PANEL RAINSCREEN
SCALE: 3" = 1'-0"

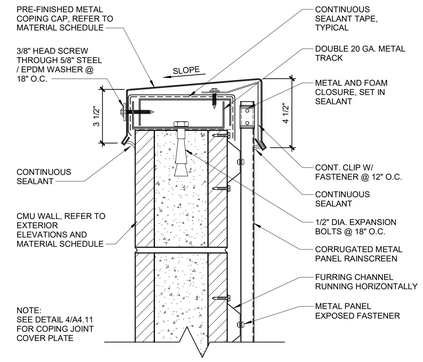

8 COPING AT METAL PANEL RAINSCREEN
SCALE: 3" = 1'-0"

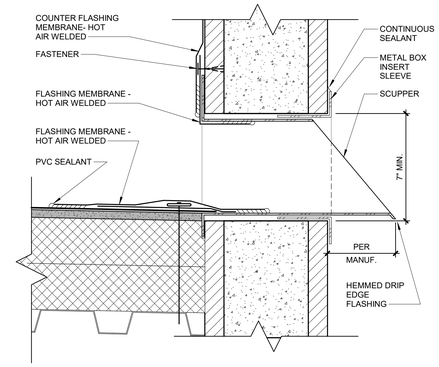

4 SCUPPER DRAIN OVERFLOW DETAIL
SCALE: 3" = 1'-0"

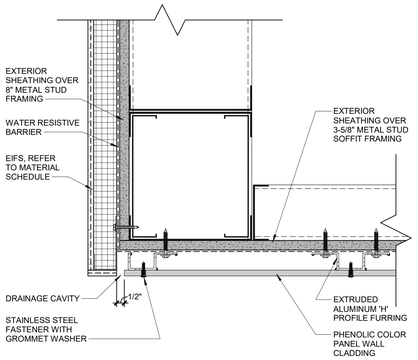

19 SOFFIT TRANSITION AT HIGH ROOF
SCALE: 3" = 1'-0"

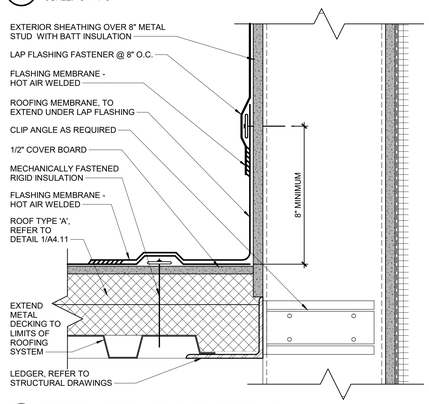

15 ROOF LAP FLASHING AT STUD WALL
SCALE: 3" = 1'-0"

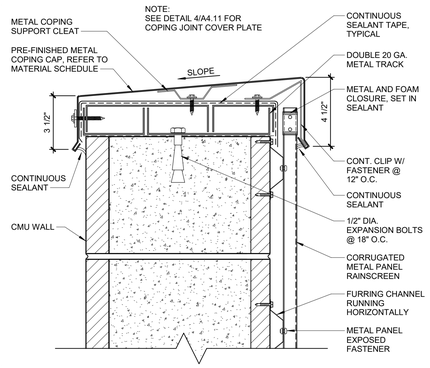

11 COPING AT METAL PANEL RAINSCREEN
SCALE: 3" = 1'-0"

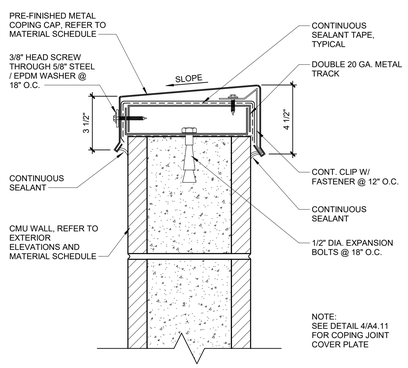

7 COPING AT CMU WALL
SCALE: 3" = 1'-0"

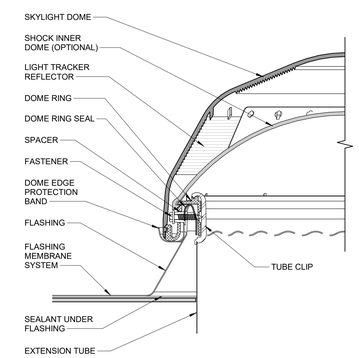

3 DOMED TUBULAR SKYLIGHT CURB
SCALE: 6" = 1'-0"

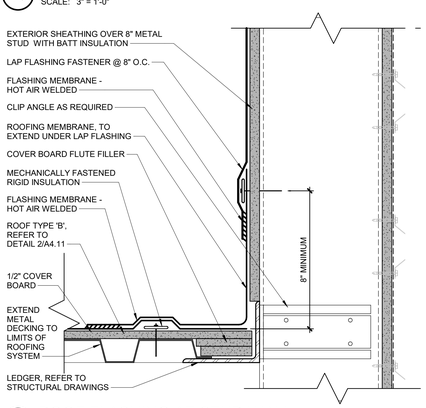

18 ROOF FLASHING AT STUD WALL
SCALE: 3" = 1'-0"

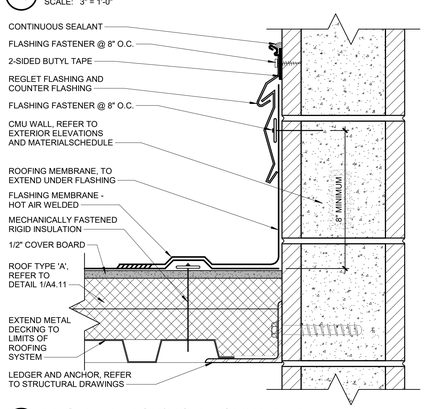

14 REGLET FLASHING AT CMU WALL
SCALE: 3" = 1'-0"

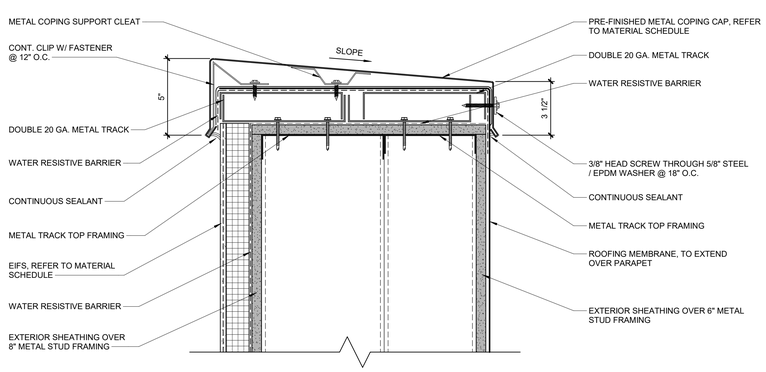

17 COPING AT HIGH ROOF PARAPET
SCALE: 3" = 1'-0"

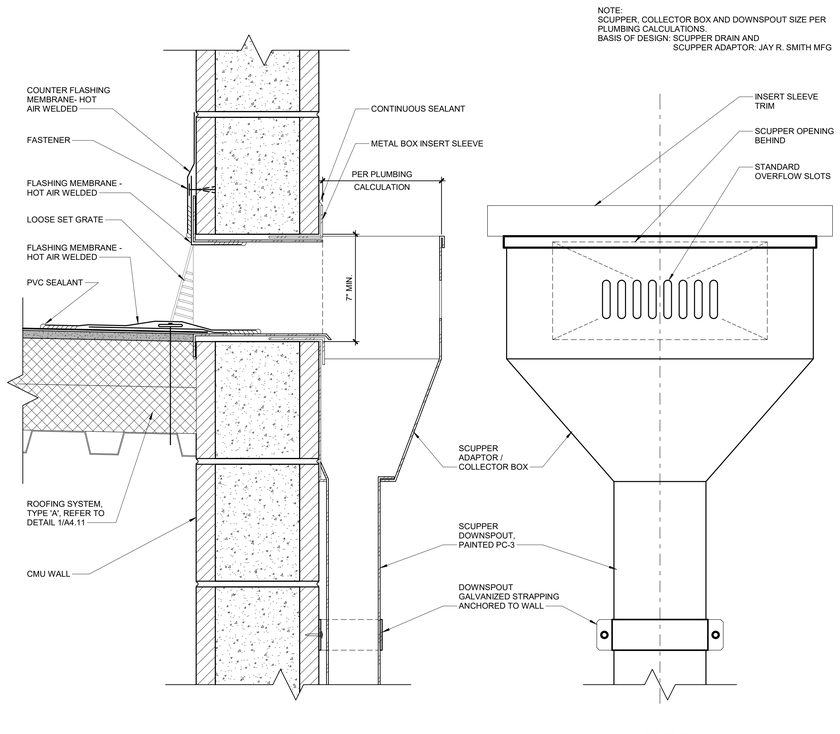

9 ROOF DRAIN SCUPPER WITH COLLECTOR BOX / DOWNSPOUT
SCALE: 3" = 1'-0"

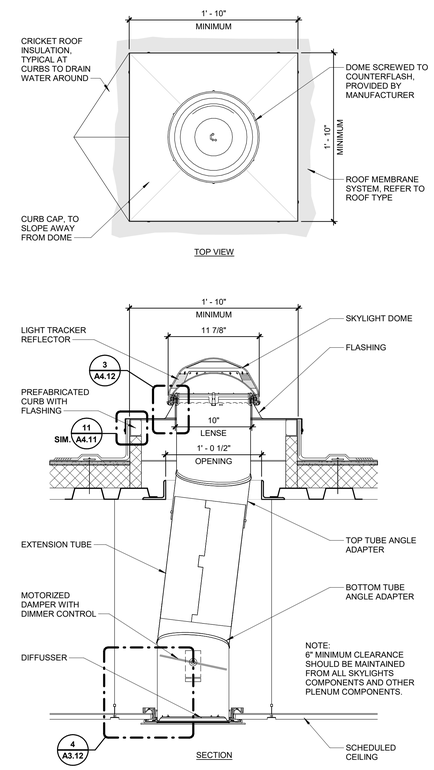

1 DOMED TUBULAR SKYLIGHT
SCALE: 1 1/2" = 1'-0"

tsk
225 South Arlington Avenue,
Suite A
Reno NV, 89501
phone: 775.857.2949
fax: 775.857.2403
www.tska.com

NOLBY M HARPSTEAD REGISTERED No. 8775 01/04/2024 ARCHITECT STATE OF NEVADA

THESE DRAWINGS AND SPECIFICATIONS ARE THE PROPERTY OF TATE SNYDER KIMSEY ARCHITECTS AND MAY NOT BE REPRODUCED OR USED FOR ANY PURPOSE WITHOUT THE ARCHITECTS WRITTEN CONSENT. AS INSTRUMENTS OF SERVICE, THESE DOCUMENTS ARE NOT FINAL AND READY FOR USE, AND THEREFORE NOT VALID, UNLESS THEY ARE SEALED, SIGNED AND DATED.

Copyright, Ltd 2024

Consultant

PLEASE RECYCLE

Project
SPARKS Fire Station #6

6963 SCHEIDBAR ROAD, SPARKS NEVADA 89436

Job No: 22-043

Owner
CITY OF SPARKS

BID SET

REVISIONS		
REV	DATE	DESCRIPTION

Sheet Title
ROOF DETAILS

Date: JANUARY 4, 2024
Sheet No:
A4.12

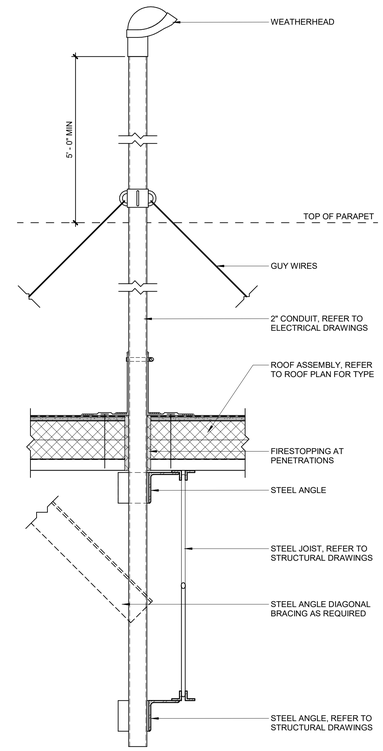

3 RADIO MAST / ANTENNA CONDUIT PENETRATION AT ROOF JOIST
SCALE: 1 1/2" = 1'-0"

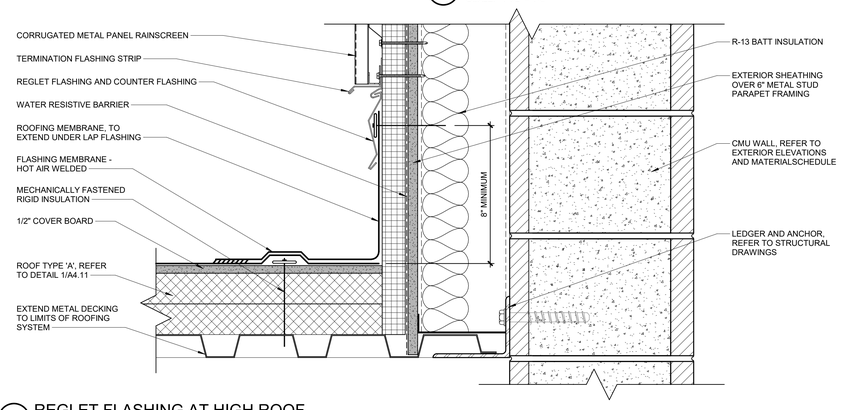

6 REGLET FLASHING AT HIGH ROOF
SCALE: 3" = 1'-0"

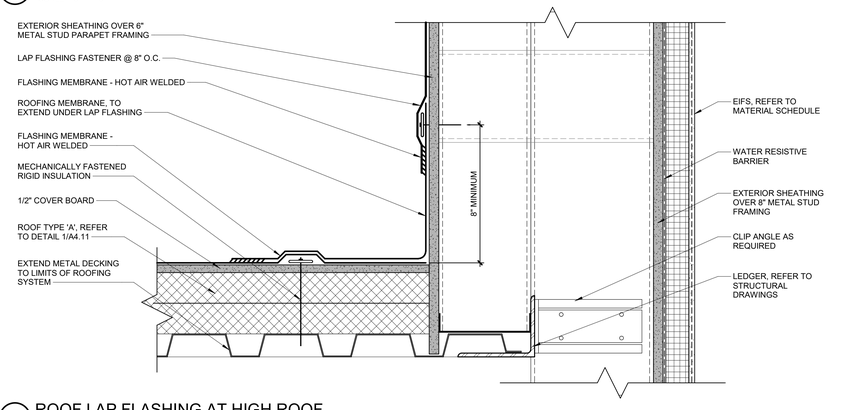

5 ROOF LAP FLASHING AT HIGH ROOF
SCALE: 3" = 1'-0"

tsk
225 South Arlington Avenue,
Suite A
Reno NV, 89501
phone: 775.857.2949
fax: 775.857.2403
www.tska.com

KOLBY M HARPSTEAD
REGISTERED
No. 8775
01/04/2024
ARCHITECT
STATE OF NEVADA

THESE DRAWINGS AND SPECIFICATIONS ARE THE PROPERTY OF TATE SNYDER KIMSEY ARCHITECTS AND MAY NOT BE REPRODUCED OR USED FOR ANY PURPOSE WITHOUT THE ARCHITECTS WRITTEN CONSENT. AS INSTRUMENTS OF SERVICE, THESE DOCUMENTS ARE NOT FINAL AND READY FOR USE, AND THEREFORE NOT VALID, UNLESS THEY ARE SEALED, SIGNED AND DATED.
Copyright, Ltd 2024

Consultant

PLEASE RECYCLE

Project
SPARKS Fire Station #6

6963 SCHEIDBAR ROAD, SPARKS NEVADA 89436

Job No: 22-043

Owner
CITY OF SPARKS

BID SET

REVISIONS		
REV	DATE	DESCRIPTION

Sheet Title
ROOF DETAILS

Date: JANUARY 4, 2024
Sheet No:
A4.13

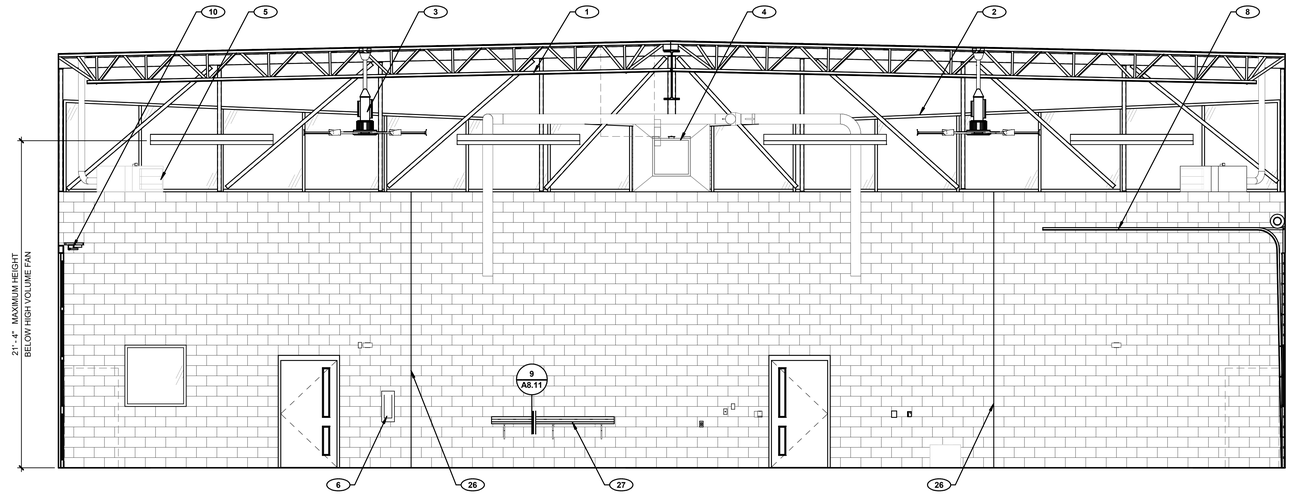

3 APPARATUS BAYS 142 - SOUTH
SCALE: 1/4" = 1'-0"

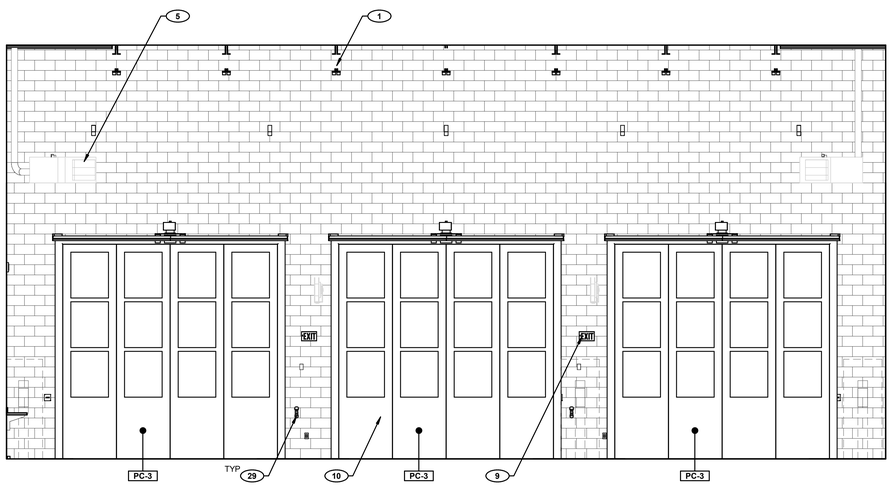

4 APPARATUS BAYS 142 - EAST
SCALE: 1/4" = 1'-0"

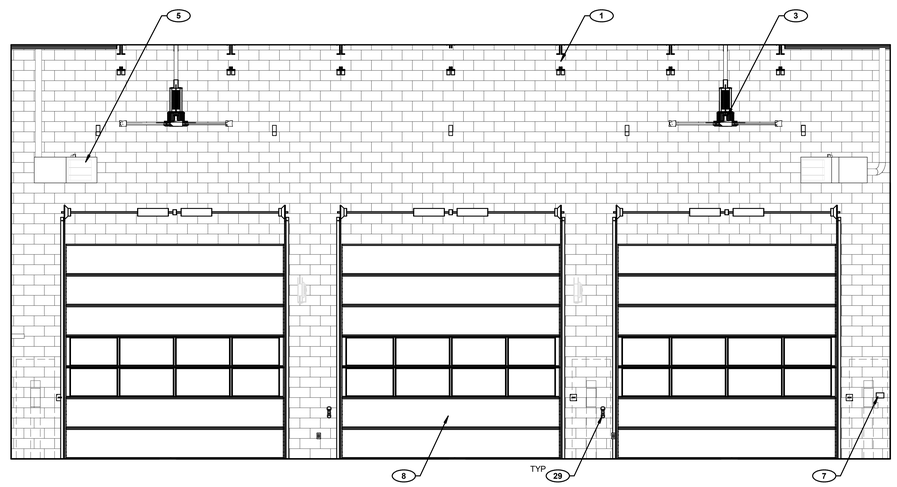

2 APPARATUS BAYS 142 - WEST
SCALE: 1/4" = 1'-0"

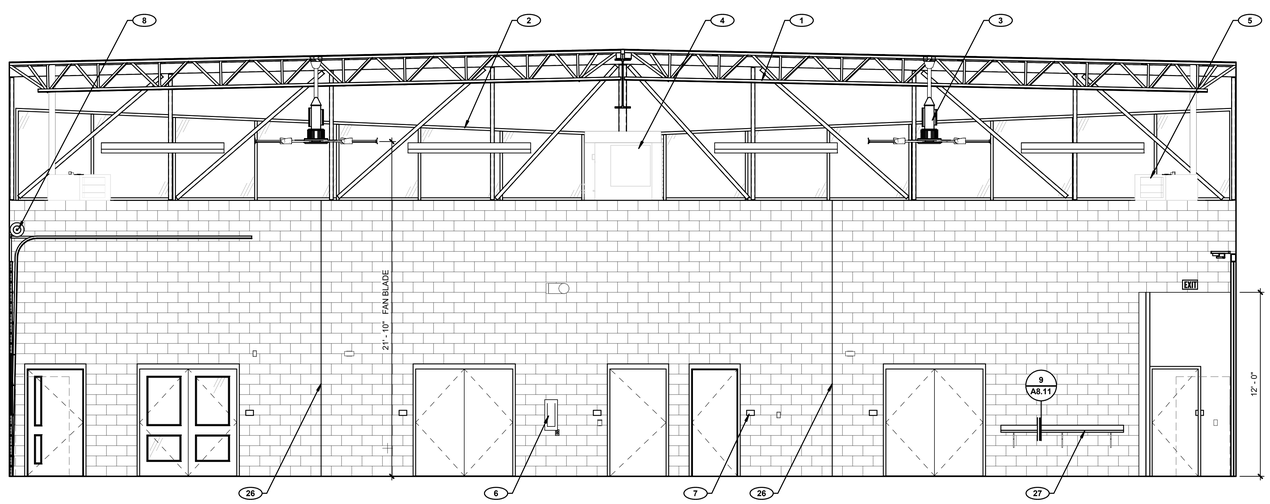

1 APPARATUS BAYS 142 - NORTH
SCALE: 1/4" = 1'-0"

GENERAL NOTES

1. REFER TO SHEET A2.01 FOR ROOM FINISH SCHEDULE AND MATERIAL SCHEDULE.
2. REFER TO CASEWORK PLANS & ELEVATIONS FOR INTERIOR ELEVATIONS OF WALLS BEHIND CASEWORK.
3. PROVIDE SUFFICIENT BLOCKING ON WALLS FOR ALL INTERIOR WALL MOUNTED EQUIPMENT.
4. CONTRACTOR TO REPORT ANY DISCREPANCIES WITH WALL MOUNTED EQUIPMENT AND ACCESSORIES WITH THE ARCHITECT.
5. REFER TO ELECTRICAL DRAWINGS FOR FIXTURE MOUNTING HEIGHTS AND LOCATIONS, UNLESS NOTED OTHERWISE.

KEYNOTES

1. EXPOSED STEEL JOIST, REFER TO STRUCTURAL DRAWINGS
2. CLERESTORY WINDOW , REFER TO WINDOW TYPES
3. HIGH VOLUME, LOW VELOCITY FAN
4. MECHANICAL EQUIPMENT, REFER TO MECHANICAL DRAWINGS
5. UNIT HEATER, REFER TO MECHANICAL DRAWINGS
6. FIRE EXTINGUISHER CABINET, REFER TO LIFE SAFETY PLAN
7. TYPICAL DOOR SIGNAGE, REFER TO SIGNAGE PLAN
8. OVERHEAD SECTIONAL DOOR REFER TO DOOR TYPES AND DOOR SCHEDULE
9. EMERGENCY EXIT SIGN, REFER TO ELECTRICAL DRAWINGS
10. FOUR-FOLD FOLDING DOOR, REFER TO DOOR TYPES AND DOOR SCHEDULE
11. TV MONITOR, REFER TO FURNITURE AND EQUIPMENT PLAN
12. 4-1/2" WALL BASE, REFER TO MATERIAL SCHEDULE
13. EXERCISE EQUIPMENT (SHOWN DASHED), REFER TO FURNITURE AND EQUIPMENT PLAN
14. 4' x 8' MARKER BOARD, REFER TO FURNITURE AND EQUIPMENT PLAN
15. FURNITURE (SHOWN DASHED), REFER TO FURNITURE AND EQUIPMENT PLAN
16. OPERABLE PARTITION
17. SLIDING BARN DOOR, REFER TO DOOR TYPES AND SCHEDULE
18. CASEWORK, REFER TO CASEWORK PLAN AND ELEVATIONS
19. COMMERCIAL WASHER AND DRYER (SHOWN DASHED), REFER TO FURNITURE AND EQUIPMENT PLAN
20. COMMERCIAL SINK, WALL MOUNTED
21. MOP SINK, REFER TO PLUMBING DRAWINGS
22. EMERGENCY EYE WASH AND SAFETY SHOWER STATION
23. FRP - FIBER REINFORCED PANEL (W-3), REFER TO MATERIAL SCHEDULE
24. RESILIENT ATHLETIC WALL PANEL (W-8)
25. MOP HOLDER AND SHELF (TA-10), REFER TO TOILET ACCESSORIES SCHEDULE
26. MASONRY CONTROL JOINT, REFER TO STRUCTURAL DRAWINGS
27. STAINLESS STEEL WORK BENCH, REFER TO CASEWORK PLAN AND ELEVATIONS
28. SOLID SURFACE COUNTERTOP WITH BACKSPLASH, (ML-1)
29. HOSE BIB, REFER TO PLUMBING DRAWINGS

tsk

225 South Arlington Avenue,
Suite A
Reno NV, 89501
phone: 775.857.2949
fax: 775.857.2403
www.tska.com

KOLBY M HARPSTEAD
REGISTERED
No. 8775
01/04/2024
ARCHITECT
STATE OF NEVADA

THESE DRAWINGS AND SPECIFICATIONS ARE THE PROPERTY OF TATE SNYDER KIMSEY ARCHITECTS AND MAY NOT BE REPRODUCED OR USED FOR ANY PURPOSE WITHOUT THE ARCHITECTS WRITTEN CONSENT. AS INSTRUMENTS OF SERVICE, THESE DOCUMENTS ARE NOT FINAL AND READY FOR USE, AND THEREFORE NOT VALID, UNLESS THEY ARE SEALED, SIGNED AND DATED.

Copyright, Ltd 2024

Consultant

PLEASE RECYCLE

Project

SPARKS Fire Station #6

6963 SCHEIDBAR ROAD, SPARKS NEVADA 89436

Job No: 22-043

Owner

CITY OF SPARKS

BID SET

REVISIONS

REV	DATE	DESCRIPTION
A	05.18.23	Review Comments

Sheet Title

INTERIOR ELEVATIONS

Date: JANUARY 4, 2024

Sheet No:

A5.01

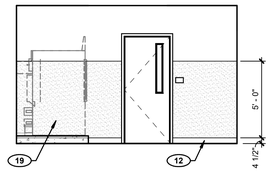

12 RED ZONE VEST. & LAUNDRY 151 - EAST
SCALE: 1/4" = 1'-0"

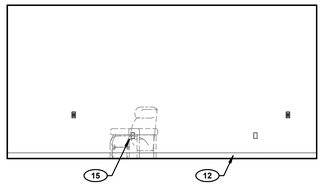

7 DAY ROOM 139 - EAST
SCALE: 1/4" = 1'-0"

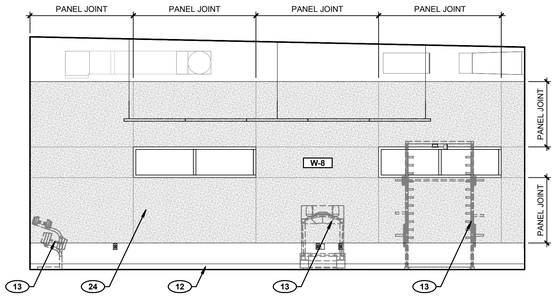

4 EXERCISE 103 - EAST
SCALE: 1/4" = 1'-0"

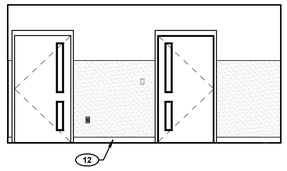

11 RED ZONE VEST. & LAUNDRY 151 - SOUTH
SCALE: 1/4" = 1'-0"

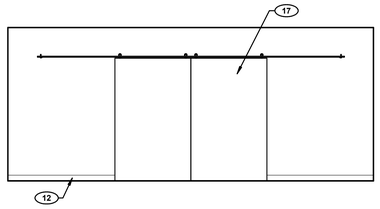

8 DAY ROOM 139 - SOUTH
SCALE: 1/4" = 1'-0"

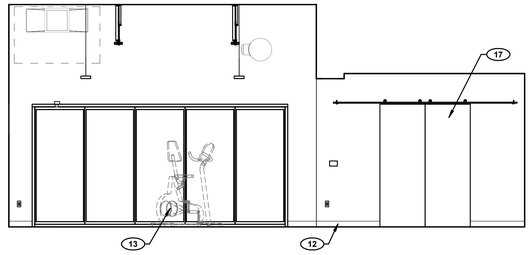

3 EXERCISE 103 AND TRAINING 104 - SOUTH
SCALE: 1/4" = 1'-0"

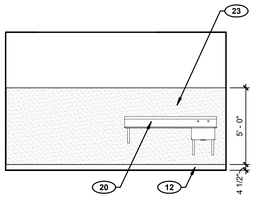

10 RED ZONE VEST. & LAUNDRY 151 - WEST
SCALE: 1/4" = 1'-0"

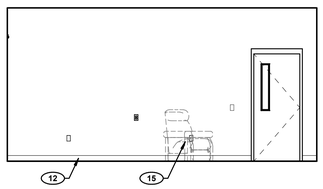

6 DAY ROOM 139 - WEST
SCALE: 1/4" = 1'-0"

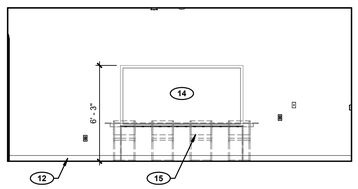

2 TRAINING 104 - WEST
SCALE: 1/4" = 1'-0"

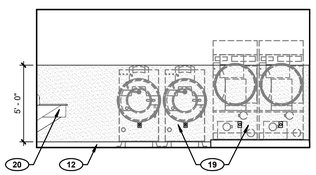

9 RED ZONE VEST. & LAUNDRY 151 - NORTH
SCALE: 1/4" = 1'-0"

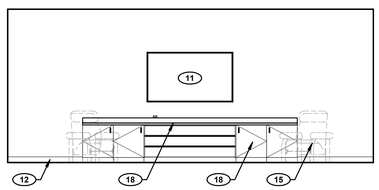

5 DAY ROOM 139 - NORTH
SCALE: 1/4" = 1'-0"

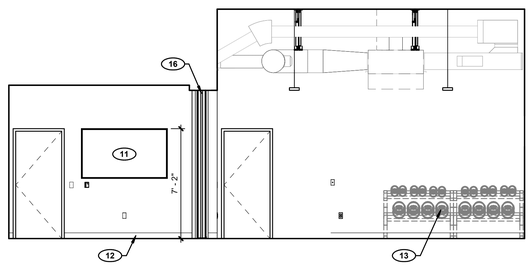

1 TRAINING 104 AND EXERCISE 103 - NORTH
SCALE: 1/4" = 1'-0"

GENERAL NOTES

1. REFER TO SHEET A2.01 FOR ROOM FINISH SCHEDULE AND MATERIAL SCHEDULE.
2. REFER TO CASEWORK PLANS & ELEVATIONS FOR INTERIOR ELEVATIONS OF WALLS BEHIND CASEWORK.
3. PROVIDE SUFFICIENT BLOCKING ON WALLS FOR ALL INTERIOR WALL MOUNTED EQUIPMENT.
4. CONTRACTOR TO REPORT ANY DISCREPANCIES WITH WALL MOUNTED EQUIPMENT AND ACCESSORIES WITH THE ARCHITECT.
5. REFER TO ELECTRICAL DRAWINGS FOR FIXTURE MOUNTING HEIGHTS AND LOCATIONS, UNLESS NOTED OTHERWISE.

KEYNOTES

1. EXPOSED STEEL JOIST, REFER TO STRUCTURAL DRAWINGS
2. CLERESTORY WINDOW , REFER TO WINDOW TYPES
3. HIGH VOLUME, LOW VELOCITY FAN
4. MECHANICAL EQUIPMENT, REFER TO MECHANICAL DRAWINGS
5. UNIT HEATER, REFER TO MECHANICAL DRAWINGS
6. FIRE EXTINGUISHER CABINET, REFER TO LIFE SAFETY PLAN
7. TYPICAL DOOR SIGNAGE, REFER TO SIGNAGE PLAN
8. OVERHEAD SECTIONAL DOOR REFER TO DOOR TYPES AND DOOR SCHEDULE
9. EMERGENCY EXIT SIGN, REFER TO ELECTRICAL DRAWINGS
10. FOUR-FOLD FOLDING DOOR, REFER TO DOOR TYPES AND DOOR SCHEDULE
11. TV MONITOR, REFER TO FURNITURE AND EQUIPMENT PLAN
12. 4-1/2" WALL BASE, REFER TO MATERIAL SCHEDULE
13. EXERCISE EQUIPMENT (SHOWN DASHED), REFER TO FURNITURE AND EQUIPMENT PLAN
14. 4' x 8' MARKER BOARD, REFER TO FURNITURE AND EQUIPMENT PLAN
15. FURNITURE (SHOWN DASHED), REFER TO FURNITURE AND EQUIPMENT PLAN
16. OPERABLE PARTITION
17. SLIDING BARN DOOR, REFER TO DOOR TYPES AND SCHEDULE
18. CASEWORK, REFER TO CASEWORK PLAN AND ELEVATIONS
19. COMMERCIAL WASHER AND DRYER (SHOWN DASHED), REFER TO FURNITURE AND EQUIPMENT PLAN
20. COMMERCIAL SINK, WALL MOUNTED
21. MOP SINK, REFER TO PLUMBING DRAWINGS
22. EMERGENCY EYE WASH AND SAFETY SHOWER STATION
23. FRP - FIBER REINFORCED PANEL (W-3), REFER TO MATERIAL SCHEDULE
24. RESILIENT ATHLETIC WALL PANEL (W-8)
25. MOP HOLDER AND SHELF (TA-10), REFER TO TOILET ACCESSORIES SCHEDULE
26. MASONRY CONTROL JOINT, REFER TO STRUCTURAL DRAWINGS
27. STAINLESS STEEL WORK BENCH, REFER TO CASEWORK PLAN AND ELEVATIONS
28. SOLID SURFACE COUNTERTOP WITH BACKSPLASH, (ML-1)
29. HOSE BIB, REFER TO PLUMBING DRAWINGS

tsk

225 South Arlington Avenue,
Suite A
Reno NV, 89501
phone: 775.857.2949
fax: 775.857.2403
www.tska.com

THESE DRAWINGS AND SPECIFICATIONS ARE THE PROPERTY OF TATE SNYDER KIMSEY ARCHITECTS AND MAY NOT BE REPRODUCED OR USED FOR ANY PURPOSE WITHOUT THE ARCHITECTS WRITTEN CONSENT. AS INSTRUMENTS OF SERVICE, THESE DOCUMENTS ARE NOT FINAL AND READY FOR USE, AND THEREFORE NOT VALID, UNLESS THEY ARE SEALED, SIGNED AND DATED.

Copyright, Ltd 2024

Consultant

PLEASE RECYCLE

Project

SPARKS Fire Station #6

6963 SCHEIDBAR ROAD, SPARKS NEVADA 89436

Job No: 22-043

Owner

CITY OF SPARKS

BID SET

REVISIONS

REV	DATE	DESCRIPTION

Sheet Title

INTERIOR ELEVATIONS

Date: JANUARY 4, 2024

Sheet No:

A5.02

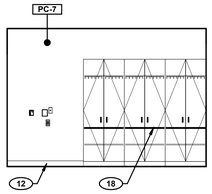

4 TYPICAL CREW ROOM - EAST
SCALE: 1/4" = 1'-0"

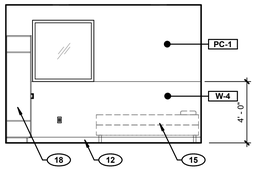

3 TYPICAL CREW ROOM - SOUTH
SCALE: 1/4" = 1'-0"

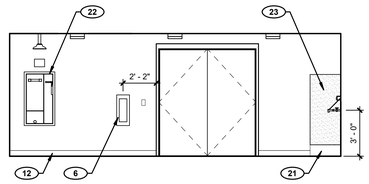

6 TOOL SHOP 145 - SOUTH
SCALE: 1/4" = 1'-0"

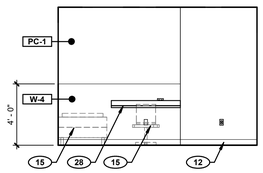

2 TYPICAL CREW ROOM - WEST
SCALE: 1/4" = 1'-0"

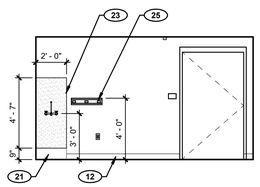

5 TOOL SHOP 145 - WEST
SCALE: 1/4" = 1'-0"

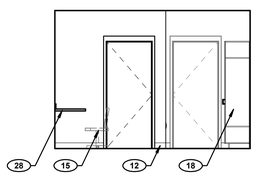

1 TYPICAL CREW ROOM - NORTH
SCALE: 1/4" = 1'-0"

GENERAL NOTES

1. REFER TO SHEET A2.01 FOR ROOM FINISH SCHEDULE AND MATERIAL SCHEDULE.
2. REFER TO CASEWORK PLANS & ELEVATIONS FOR INTERIOR ELEVATIONS OF WALLS BEHIND CASEWORK.
3. PROVIDE SUFFICIENT BLOCKING ON WALLS FOR ALL INTERIOR WALL MOUNTED EQUIPMENT.
4. CONTRACTOR TO REPORT ANY DISCREPANCIES WITH WALL MOUNTED EQUIPMENT AND ACCESSORIES WITH THE ARCHITECT.
5. REFER TO ELECTRICAL DRAWINGS FOR FIXTURE MOUNTING HEIGHTS AND LOCATIONS, UNLESS NOTED OTHERWISE.

KEYNOTES

1. EXPOSED STEEL JOIST, REFER TO STRUCTURAL DRAWINGS
2. CLERESTORY WINDOW , REFER TO WINDOW TYPES
3. HIGH VOLUME, LOW VELOCITY FAN
4. MECHANICAL EQUIPMENT, REFER TO MECHANICAL DRAWINGS
5. UNIT HEATER, REFER TO MECHANICAL DRAWINGS
6. FIRE EXTINGUISHER CABINET, REFER TO LIFE SAFETY PLAN
7. TYPICAL DOOR SIGNAGE, REFER TO SIGNAGE PLAN
8. OVERHEAD SECTIONAL DOOR REFER TO DOOR TYPES AND DOOR SCHEDULE
9. EMERGENCY EXIT SIGN, REFER TO ELECTRICAL DRAWINGS
10. FOUR-FOLD FOLDING DOOR, REFER TO DOOR TYPES AND DOOR SCHEDULE
11. TV MONITOR, REFER TO FURNITURE AND EQUIPMENT PLAN
12. 4-1/2" WALL BASE, REFER TO MATERIAL SCHEDULE
13. EXERCISE EQUIPMENT (SHOWN DASHED), REFER TO FURNITURE AND EQUIPMENT PLAN
14. 4' x 8' MARKER BOARD, REFER TO FURNITURE AND EQUIPMENT PLAN
15. FURNITURE (SHOWN DASHED), REFER TO FURNITURE AND EQUIPMENT PLAN
16. OPERABLE PARTITION
17. SLIDING BARN DOOR, REFER TO DOOR TYPES AND SCHEDULE
18. CASEWORK, REFER TO CASEWORK PLAN AND ELEVATIONS
19. COMMERCIAL WASHER AND DRYER (SHOWN DASHED), REFER TO FURNITURE AND EQUIPMENT PLAN
20. COMMERCIAL SINK, WALL MOUNTED
21. MOP SINK, REFER TO PLUMBING DRAWINGS
22. EMERGENCY EYE WASH AND SAFETY SHOWER STATION
23. FRP - FIBER REINFORCED PANEL (W-3), REFER TO MATERIAL SCHEDULE
24. RESILIENT ATHLETIC WALL PANEL (W-8)
25. MOP HOLDER AND SHELF (TA-10), REFER TO TOILET ACCESSORIES SCHEDULE
26. MASONRY CONTROL JOINT, REFER TO STRUCTURAL DRAWINGS
27. STAINLESS STEEL WORK BENCH, REFER TO CASEWORK PLAN AND ELEVATIONS
28. SOLID SURFACE COUNTERTOP WITH BACKSPLASH, (ML-1)
29. HOSE BIB, REFER TO PLUMBING DRAWINGS

tsk
225 South Arlington Avenue,
Suite A
Reno NV, 89501
phone: 775.857.2949
fax: 775.857.2403
www.tska.com

THESE DRAWINGS AND SPECIFICATIONS ARE THE PROPERTY OF TATE SNYDER KIMSEY ARCHITECTS AND MAY NOT BE REPRODUCED OR USED FOR ANY PURPOSE WITHOUT THE ARCHITECTS WRITTEN CONSENT.
AS INSTRUMENTS OF SERVICE, THESE DOCUMENTS ARE NOT FINAL AND READY FOR USE, AND THEREFORE NOT VALID, UNLESS THEY ARE SEALED, SIGNED AND DATED.
Copyright, Ltd 2024

Consultant

PLEASE RECYCLE

Project
SPARKS Fire Station #6

6963 SCHEIDBAR ROAD, SPARKS NEVADA 89436

Job No: 22-043

Owner
CITY OF SPARKS

BID SET

REVISIONS

REV	DATE	DESCRIPTION

Sheet Title
INTERIOR ELEVATIONS

Date: JANUARY 4, 2024
Sheet No:
A5.03

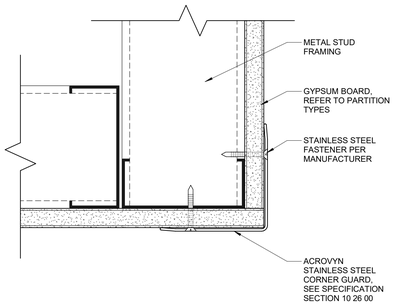

12 CORNER GUARD DETAIL
SCALE: 6" = 1'-0"

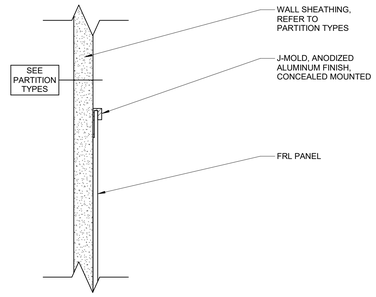

8 FRL PANEL @ TOP TERMINATION TRIM
SCALE: 6" = 1'-0"

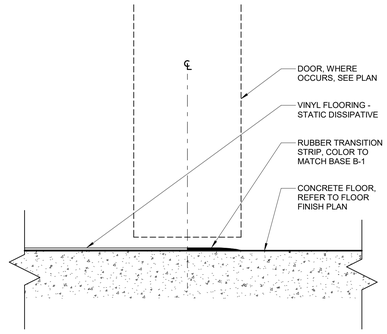

4 VCT - CONC./ RESINOUS THRESHOLD
SCALE: 6" = 1'-0"

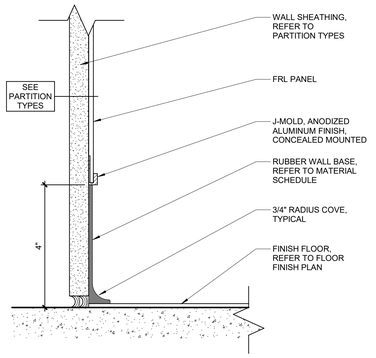

11 RUBBER BASE @ FRL PANEL
SCALE: 6" = 1'-0"

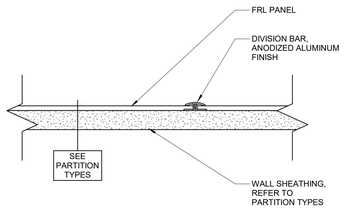

7 FRL PANEL JOINT DETAIL
SCALE: 6" = 1'-0"

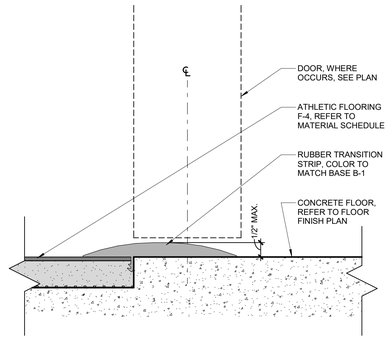

3 ATHELETIC FLOOR TO CONCRETE TRANSITION
SCALE: 6" = 1'-0"

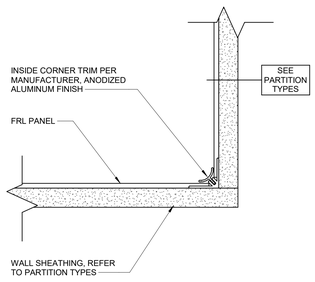

10 FRL PANEL INSIDE CORNER DETAIL
SCALE: 6" = 1'-0"

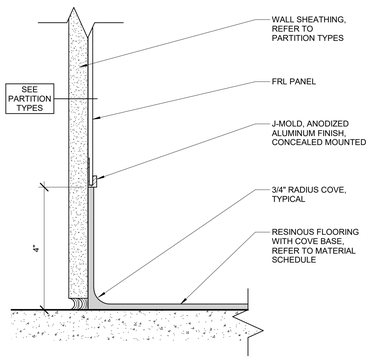

6 RESINOUS BASE @ FRL PANEL
SCALE: 6" = 1'-0"

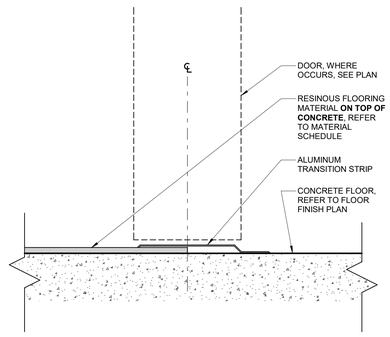

2 RESINOUS FLOOR TO CONCRETE THRESHOLD
SCALE: 6" = 1'-0"

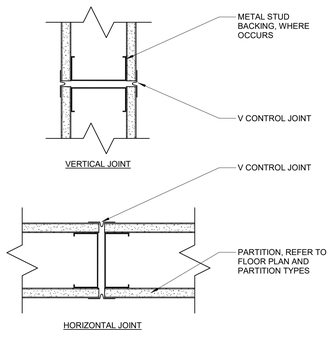

13 STUD CONTROL JOINT DETAIL
SCALE: 3" = 1'-0"

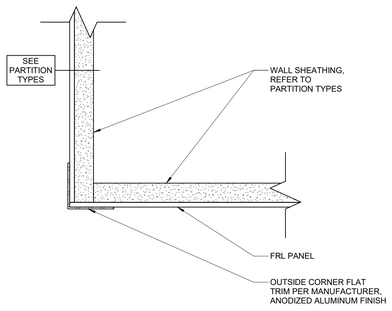

9 FRL PANEL OUTSIDE CORNER DETAIL
SCALE: 6" = 1'-0"

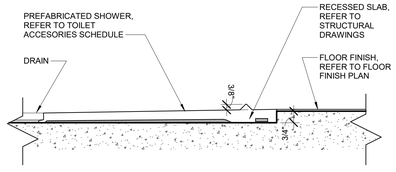

5 RECESSED SLAB @ PRE-FAB SHOWER
SCALE: 3" = 1'-0"

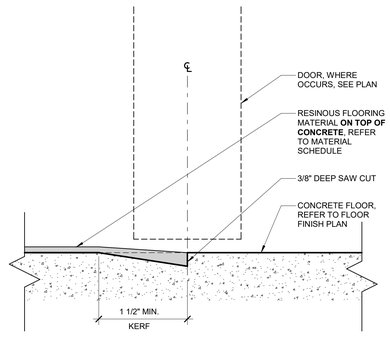

1 RESINOUS FLOOR TO CONCRETE TRANSITION
SCALE: 6" = 1'-0"

tsk
225 South Arlington Avenue,
Suite A
Reno NV, 89501
phone: 775.857.2949
fax: 775.857.2403
www.tska.com

THESE DRAWINGS AND SPECIFICATIONS ARE THE PROPERTY OF TATE SNYDER KIMSEY ARCHITECTS AND MAY NOT BE REPRODUCED OR USED FOR ANY PURPOSE WITHOUT THE ARCHITECTS WRITTEN CONSENT. AS INSTRUMENTS OF SERVICE, THESE DOCUMENTS ARE NOT FINAL AND READY FOR USE, AND THEREFORE NOT VALID, UNLESS THEY ARE SEALED, SIGNED AND DATED.

Copyright, Ltd 2024

Consultant

PLEASE RECYCLE

Project
SPARKS Fire Station #6

6963 SCHEIDBAR ROAD, SPARKS NEVADA 89436

Job No: 22-043

Owner
CITY OF SPARKS

BID SET

REVISIONS		
REV	DATE	DESCRIPTION

Sheet Title
INTERIOR FINISH DETAILS

Date: JANUARY 4, 2024
Sheet No:
A5.11

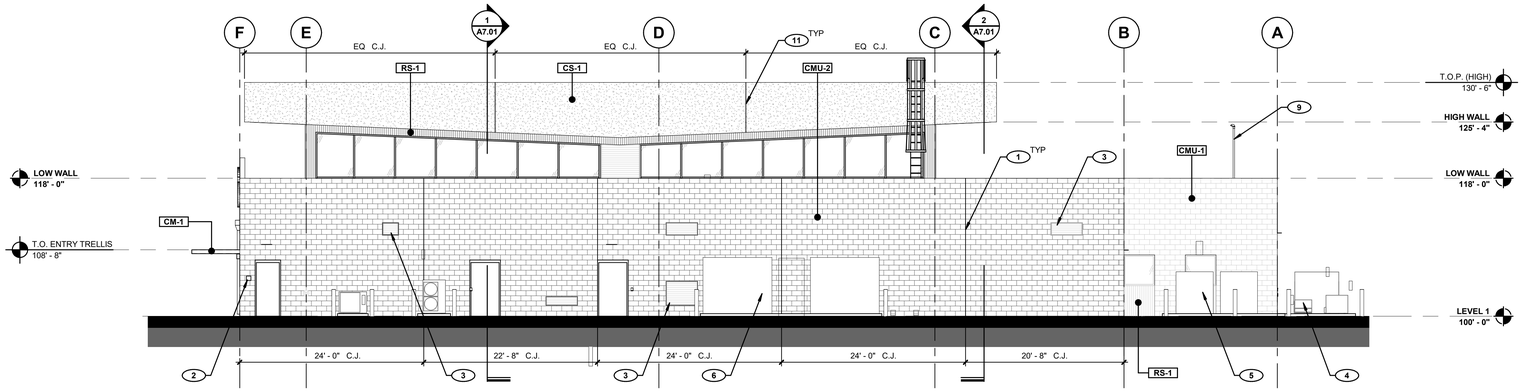

4 EXTERIOR ELEVATION - NORTH
SCALE: 1/8" = 1'-0"

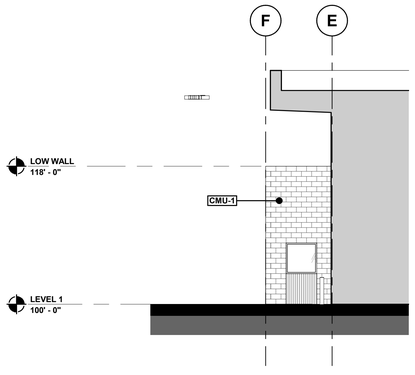

3 EXTERIOR ELEVATION - NORTH/EAST MAIN BUILDING
SCALE: 1/8" = 1'-0"

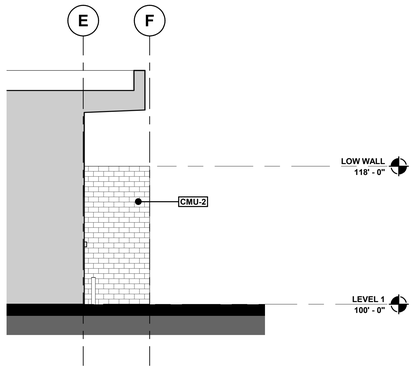

2 EXTERIOR ELEVATION - SOUTH/EAST APPARATUS BAY SUPPORT
SCALE: 1/8" = 1'-0"

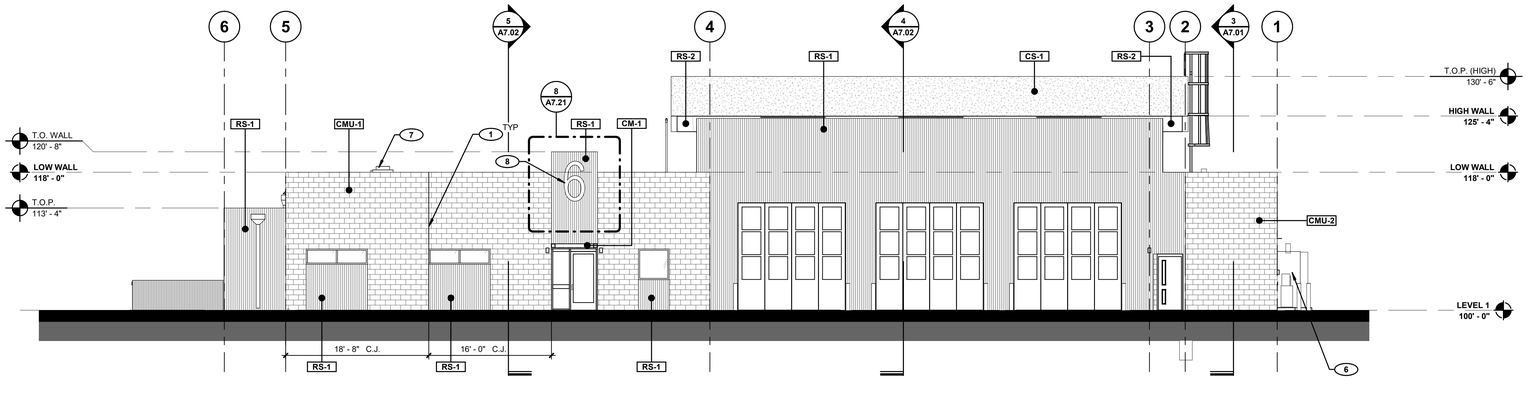

1 EXTERIOR ELEVATION - EAST
SCALE: 1/8" = 1'-0"

GENERAL NOTES

1. REFER TO CIVIL DRAWINGS FOR VARIOUS GRADE LEVELS.
2. ALL TOP OF PARAPET (T.O.P.) AND TOP OF WALL (T.O.W.) ELEVATION INDICATED ARE MEASURED FROM FINISH FLOOR ELEVATION.
3. ALL EXPOSED EXTERIOR MASONRY TO RECEIVE ANTI-GRAFFITI COATING, INCLUDING ALL SITE WALLS.
4. REFER TO SHEET A2.01 FOR ROOM FINISH SCHEDULE AND MATERIAL SCHEDULE.
5. PROVIDE SUFFICIENT BLOCKING ON WALLS FOR ALL EXTERIOR WALL MOUNTED EQUIPMENT.
6. REFER TO ELECTRICAL DRAWINGS FOR FIXTURE MOUNTING HEIGHTS AND LOCATIONS UNLESS NOTED OTHERWISE.
7. COORDINATE ALL CONDUIT AND J-BOXES TO BE INSTALLED IN CMU WALLS PRIOR TO CMU WALL INSTALLATION.
8. PROVIDE EXPANSION JOINT / CONTROL JOINT ON CMU WALLS AS REQUIRED.
9. PAINT ALL EXPOSED MECHANICAL EQUIPMENT THAT ARE VISIBLE FROM THE ROOF PARAPET

KEYNOTES

1. MASONRY CONTROL JOINT @ 24' - 0" O.C. MAX., TYPICAL
2. KNOX BOX LOCATION
3. MECHANICAL VENTILATION LOUVER, REFER TO MECHANICAL DRAWINGS
4. MECHANICAL EQUIPMENT, REFER TO MECHANICAL DRAWINGS
5. EMERGENCY POWER GENERATOR, REFER TO ELECTRICAL DRAWINGS
6. SWITCHGEAR EQUIPMENT, REFER TO ELECTRICAL DRAWINGS
7. ROOF EXHAUST FAN, REFER TO MECHANICAL DRAWINGS
8. FIRE STATION NUMERICAL SIGNAGE, COLOR TO MATCH PC-3 OR DARK CHARCOAL
9. RADIO MAST ANTENNA/REPEATER, REFER TO TECHNOLOGY DRAWINGS
10. SCUPPER ROOF DRAIN, REFER TO PLUMBING DRAWINGS.
11. EIFS CONTROL JOINT, TYPICAL

LEGEND

- CONCRETE MASONRY UNIT **(CMU-1)**
- CONCRETE MASONRY UNIT **(CMU-2)**
- EIFS **(CS-1)**
- RAINSCREEN - CORRUGATED METAL **(RS-1)**
- RAINSCREEN - PHENOLIC PANEL **(RS-2)**

tsk
225 South Arlington Avenue,
Suite A
Reno NV, 89501
phone: 775.857.2949
fax: 775.857.2403
www.tska.com

THESE DRAWINGS AND SPECIFICATIONS ARE THE PROPERTY OF TATE SNYDER KIMSEY ARCHITECTS AND MAY NOT BE REPRODUCED OR USED FOR ANY PURPOSE WITHOUT THE ARCHITECTS WRITTEN CONSENT. AS INSTRUMENTS OF SERVICE, THESE DOCUMENTS ARE NOT FINAL AND READY FOR USE, AND THEREFORE NOT VALID, UNLESS THEY ARE SEALED, SIGNED AND DATED.

Copyright, Ltd 2024

Consultant

PLEASE RECYCLE

Project
SPARKS Fire Station #6

6963 SCHEIDBAR ROAD, SPARKS NEVADA 89436

Job No: 22-043

Owner
CITY OF SPARKS

BID SET

REVISIONS		
REV	DATE	DESCRIPTION

Sheet Title
EXTERIOR ELEVATIONS

Date: JANUARY 4, 2024
Sheet No:
A6.01

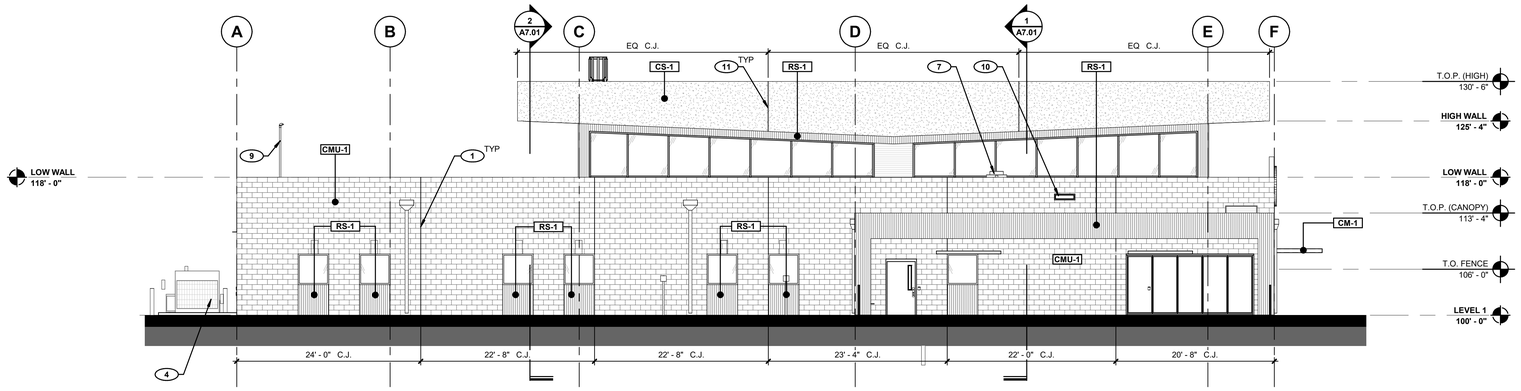

8 EXTERIOR ELEVATION - SOUTH
SCALE: 1/8" = 1'-0"

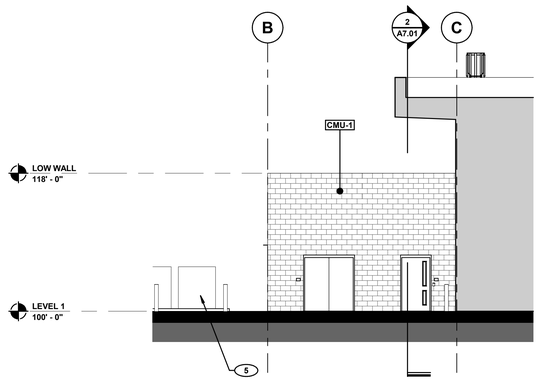

7 EXTERIOR ELEVATION - SOUTH/WEST APPARATUS BAY SUPPORT
SCALE: 1/8" = 1'-0"

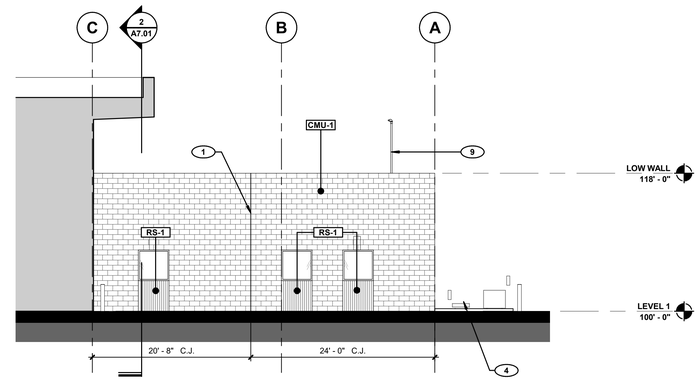

6 EXTERIOR ELEVATION - NORTH/WEST MAIN BUILDING
SCALE: 1/8" = 1'-0"

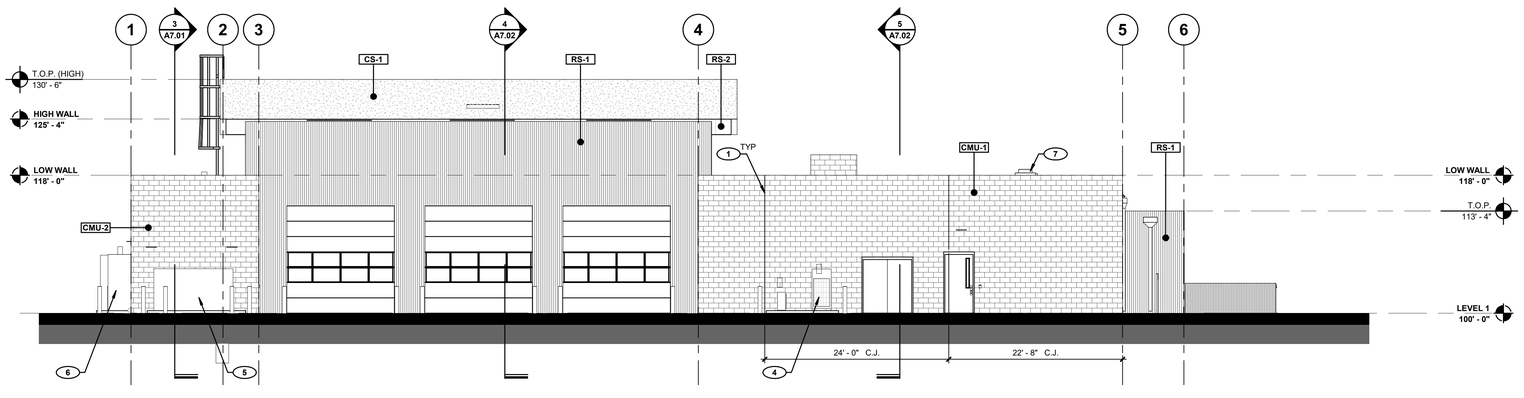

5 EXTERIOR ELEVATION - WEST
SCALE: 1/8" = 1'-0"

GENERAL NOTES

1. REFER TO CIVIL DRAWINGS FOR VARIOUS GRADE LEVELS.
2. ALL TOP OF PARAPET (T.O.P.) AND TOP OF WALL (T.O.W.) ELEVATION INDICATED ARE MEASURED FROM FINISH FLOOR ELEVATION.
3. ALL EXPOSED EXTERIOR MASONRY TO RECEIVE ANTI-GRAFFITI COATING, INCLUDING ALL SITE WALLS.
4. REFER TO SHEET A2.01 FOR ROOM FINISH SCHEDULE AND MATERIAL SCHEDULE.
5. PROVIDE SUFFICIENT BLOCKING ON WALLS FOR ALL EXTERIOR WALL MOUNTED EQUIPMENT.
6. REFER TO ELECTRICAL DRAWINGS FOR FIXTURE MOUNTING HEIGHTS AND LOCATIONS UNLESS NOTED OTHERWISE.
7. COORDINATE ALL CONDUIT AND J-BOXES TO BE INSTALLED IN CMU WALLS PRIOR TO CMU WALL INSTALLATION.
8. PROVIDE EXPANSION JOINT / CONTROL JOINT ON CMU WALLS AS REQUIRED.
9. PAINT ALL EXPOSED MECHANICAL EQUIPMENT THAT ARE VISIBLE FROM THE ROOF PARAPET

KEYNOTES

1. MASONRY CONTROL JOINT @ 24' - 0" O.C. MAX., TYPICAL
2. KNOX BOX LOCATION
3. MECHANICAL VENTILATION LOUVER, REFER TO MECHANICAL DRAWINGS
4. MECHANICAL EQUIPMENT, REFER TO MECHANICAL DRAWINGS
5. EMERGENCY POWER GENERATOR, REFER TO ELECTRICAL DRAWINGS
6. SWITCHGEAR EQUIPMENT, REFER TO ELECTRICAL DRAWINGS
7. ROOF EXHAUST FAN, REFER TO MECHANICAL DRAWINGS
8. FIRE STATION NUMERICAL SIGNAGE, COLOR TO MATCH PC-3 OR DARK CHARCOAL
9. RADIO MAST ANTENNA/REPEATER, REFER TO TECHNOLOGY DRAWINGS
10. SCUPPER ROOF DRAIN, REFER TO PLUMBING DRAWINGS.
11. EIFS CONTROL JOINT, TYPICAL

LEGEND

- CONCRETE MASONRY UNIT **(CMU-1)**
- CONCRETE MASONRY UNIT **(CMU-2)**
- EIFS **(CS-1)**
- RAINSCREEN - CORRUGATED METAL **(RS-1)**
- RAINSCREEN - PHENOLIC PANEL **(RS-2)**

tsk
225 South Arlington Avenue,
Suite A
Reno NV, 89501
phone: 775.857.2949
fax: 775.857.2403
www.tska.com

THESE DRAWINGS AND SPECIFICATIONS ARE THE PROPERTY OF TATE SNYDER KIMSEY ARCHITECTS AND MAY NOT BE REPRODUCED OR USED FOR ANY PURPOSE WITHOUT THE ARCHITECTS WRITTEN CONSENT. AS INSTRUMENTS OF SERVICE, THESE DOCUMENTS ARE NOT FINAL AND READY FOR USE, AND THEREFORE NOT VALID, UNLESS THEY ARE SEALED, SIGNED AND DATED.

Copyright, Ltd 2024

Consultant

PLEASE RECYCLE

Project
SPARKS Fire Station #6

6963 SCHEIDBAR ROAD, SPARKS NEVADA 89436

Job No: 22-043

Owner
CITY OF SPARKS

BID SET

REVISIONS		
REV	DATE	DESCRIPTION

Sheet Title
EXTERIOR ELEVATIONS

Date: JANUARY 4, 2024
Sheet No:
A6.02

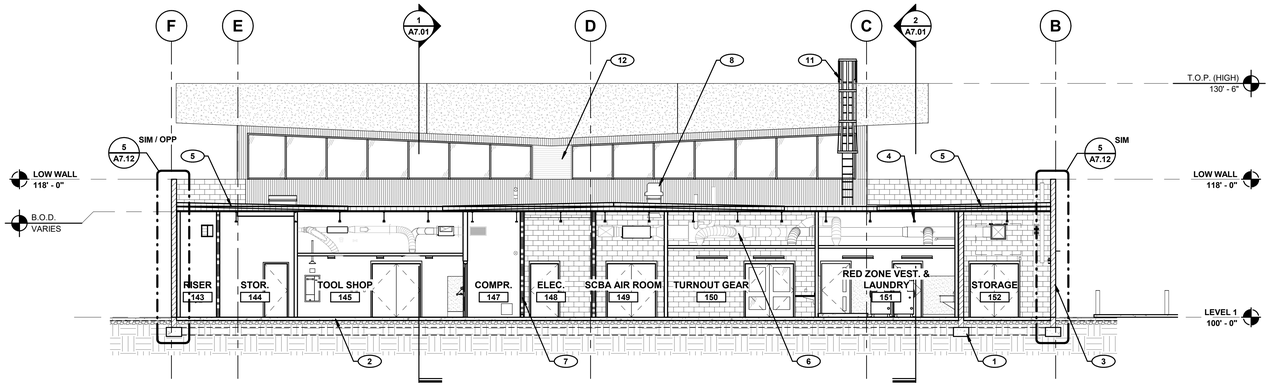

3 BUILDING SECTION - APPARATUS SUPPORT - EAST/WEST
SCALE: 1/8" = 1'-0"

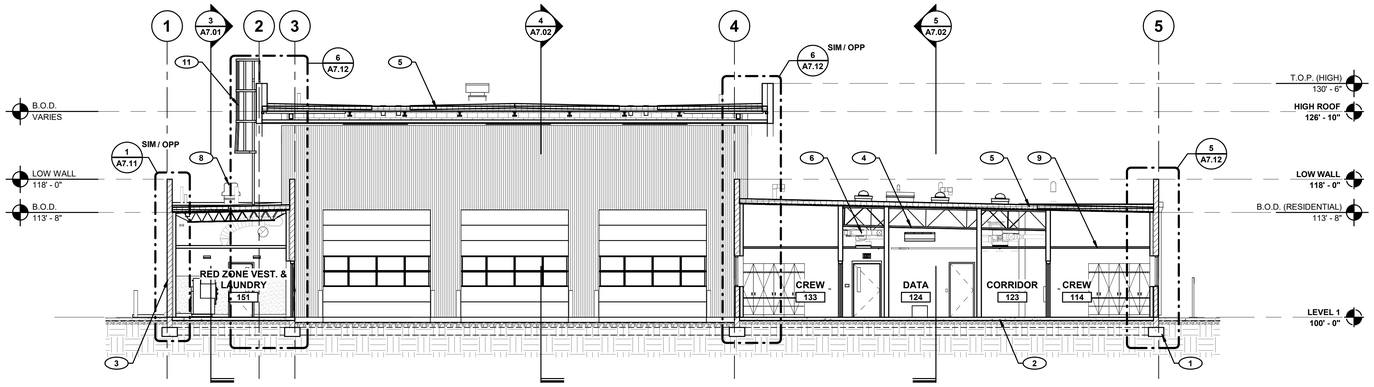

2 BUILDING SECTION - NORTH/SOUTH
SCALE: 1/8" = 1'-0"

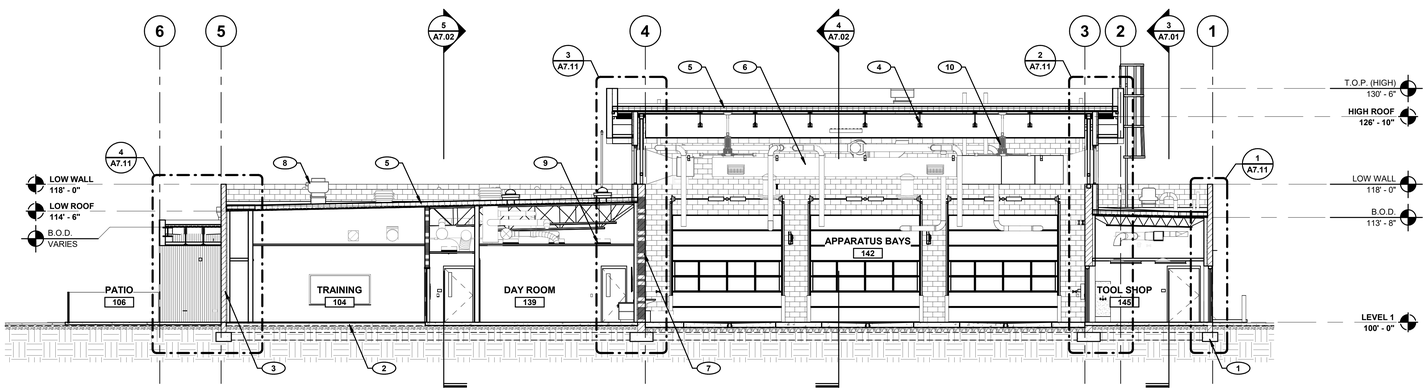

1 BUILDING SECTION - SOUTH/NORTH
SCALE: 1/8" = 1'-0"

GENERAL NOTES

1. ALL TOP OF PARAPET (T.O.P.) AND TOP OF WALL (T.O.W.) ELEVATION INDICATED ARE MEASURED FROM FINISH FLOOR ELEVATION.
2. REFER TO STRUCTURAL DRAWINGS FOR FOOTING AND SLAB REQUIREMENTS.
3. ALL CONCRETE BLOCK SURFACES ADJACENT TO SOIL BERMS AND PLANTERS SHALL BE PROVIDED WITH A MONOLITHIC WATERPROOF SYSTEM EXTENDING FROM BOTTOM OF FOOTING TO 2" ABOVE SOIL.
4. REFER TO SHEET A4.11 FOR ROOF TYPES AND DETAILS.
5. REFER TO DIMENSION PLAN FOR WALL TYPES.
6. PAINT ALL EXPOSED INTERIOR AND EXTERIOR STRUCTURAL STEEL. SEE FINISH SCHEDULE AND ELEVATIONS.
7. REFER TO FINISH SCHEDULE FOR FLOOR, WALL, AND CEILING FINISHES.
8. REFER TO EXTERIOR ELEVATIONS FOR CMU COLOR / TEXTURE.
9. PROVIDE APPROPRIATE FIRE STOPPING AT ALL FIRE-RATED PARTITIONS.
10. ALL PENETRATIONS THROUGH WALLS WITH SOUND INSULATION SHALL BE SEALED TIGHT WITH ACOUSTICAL INSULATION AND SEALANT.
11. GRAY CMU IS ACCEPTABLE BELOW GRADE.
12. ALL DISSIMILAR MATERIALS TO RECEIVE SEALANT PRIOR TO PAINTING.

KEYNOTES

1. CONCRETE FOOTING, REFER TO STRUCTURAL DRAWINGS
2. CONCRETE SLAB OVER VAPOR BARRIER AND ENGINEERED FILL, REFER TO STRUCTURAL DRAWINGS AND SOILS REPORT FOR ADDITIONAL INFORMATION
3. STRUCTURAL MASONRY WALL, REFER TO STRUCTURAL DRAWINGS
4. STRUCTURAL STEEL JOIST, REFER TO STRUCTURAL DRAWINGS
5. ROOFING SYSTEM, REFER TO ROOF PLAN AND ROOF DETAILS
6. DUCTWORK, REFER TO MECHANICAL DRAWINGS
7. RATED WALL ASSEMBLY, REFER TO PARTITION TYPES AND LIFE SAFETY PLAN
8. ROOF EXHAUST FAN, REFER TO MECHANICAL DRAWINGS
9. LIGHT FIXTURE, REFER TO ELECTRICAL DRAWINGS
10. HIGH VOLUME, LOW VELOCITY FAN
11. TUBULAR CAGE LADDER, REFER TO ROOF DETAILS
12. MECHANICAL LOUVER, REFER TO WINDOW TYPES AND MECHANICAL DRAWINGS
13. RADIO MAST ANTENNA/REPEATER, REFER TO TECHNOLOGY DRAWINGS

tsk

225 South Arlington Avenue,
Suite A
Reno NV, 89501
phone: 775.857.2949
fax: 775.857.2403
www.tska.com

THESE DRAWINGS AND SPECIFICATIONS ARE THE PROPERTY OF TATE SNYDER KIMSEY ARCHITECTS AND MAY NOT BE REPRODUCED OR USED FOR ANY PURPOSE WITHOUT THE ARCHITECTS WRITTEN CONSENT. AS INSTRUMENTS OF SERVICE, THESE DOCUMENTS ARE NOT FINAL AND READY FOR USE, AND THEREFORE NOT VALID, UNLESS THEY ARE SEALED, SIGNED AND DATED.

Copyright, Ltd 2024

Consultant

PLEASE RECYCLE

Project
SPARKS Fire Station #6

6963 SCHEIDBAR ROAD, SPARKS NEVADA 89436

Job No: 22-043

Owner
CITY OF SPARKS

BID SET

REVISIONS		
REV	DATE	DESCRIPTION

Sheet Title
BUILDING SECTIONS

Date: JANUARY 4, 2024
Sheet No:
A7.01

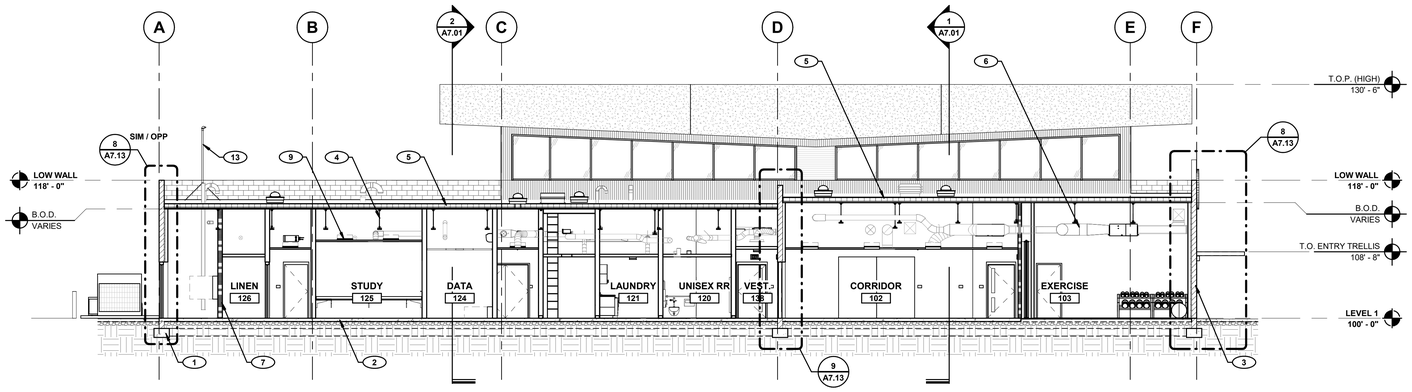

5 BUILDING SECTION - MAIN BUILDING - WEST/EAST
SCALE: 1/8" = 1'-0"

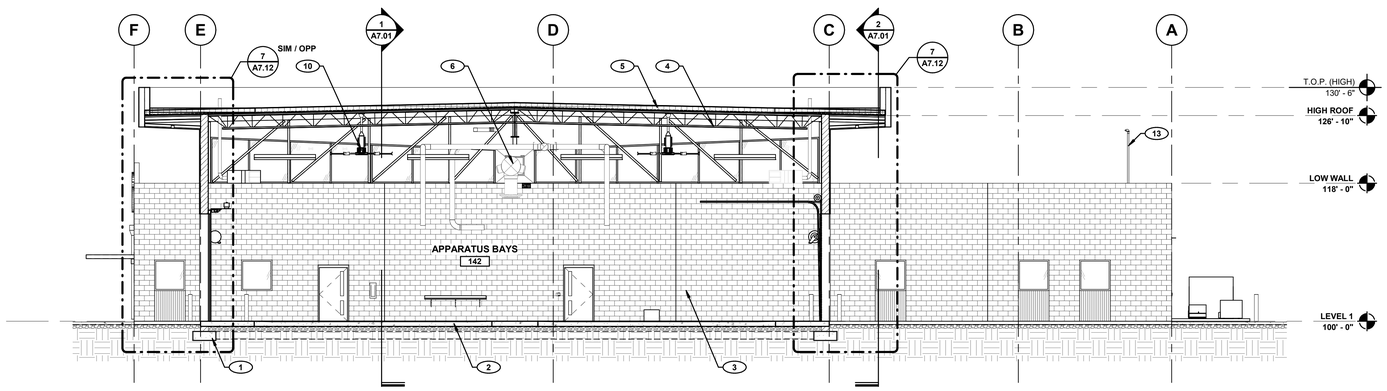

4 BUILDING SECTION - APPARATUS BAY - EAST/WEST
SCALE: 1/8" = 1'-0"

GENERAL NOTES

1. ALL TOP OF PARAPET (T.O.P.) AND TOP OF WALL (T.O.W.) ELEVATION INDICATED ARE MEASURED FROM FINISH FLOOR ELEVATION.
2. REFER TO STRUCTURAL DRAWINGS FOR FOOTING AND SLAB REQUIREMENTS.
3. ALL CONCRETE BLOCK SURFACES ADJACENT TO SOIL BERMS AND PLANTERS SHALL BE PROVIDED WITH A MONOLITHIC WATERPROOF SYSTEM EXTENDING FROM BOTTOM OF FOOTING TO 2" ABOVE SOIL.
4. REFER TO SHEET A4.11 FOR ROOF TYPES AND DETAILS.
5. REFER TO DIMENSION PLAN FOR WALL TYPES.
6. PAINT ALL EXPOSED INTERIOR AND EXTERIOR STRUCTURAL STEEL. SEE FINISH SCHEDULE AND ELEVATIONS.
7. REFER TO FINISH SCHEDULE FOR FLOOR, WALL, AND CEILING FINISHES.
8. REFER TO EXTERIOR ELEVATIONS FOR CMU COLOR / TEXTURE.
9. PROVIDE APPROPRIATE FIRE STOPPING AT ALL FIRE-RATED PARTITIONS.
10. ALL PENETRATIONS THROUGH WALLS WITH SOUND INSULATION SHALL BE SEALED TIGHT WITH ACOUSTICAL INSULATION AND SEALANT.
11. GRAY CMU IS ACCEPTABLE BELOW GRADE.
12. ALL DISSIMILAR MATERIALS TO RECEIVE SEALANT PRIOR TO PAINTING.

KEYNOTES

1. CONCRETE FOOTING, REFER TO STRUCTURAL DRAWINGS
2. CONCRETE SLAB OVER VAPOR BARRIER AND ENGINEERED FILL, REFER TO STRUCTURAL DRAWINGS AND SOILS REPORT FOR ADDITIONAL INFORMATION
3. STRUCTURAL MASONRY WALL, REFER TO STRUCTURAL DRAWINGS
4. STRUCTURAL STEEL JOIST, REFER TO STRUCTURAL DRAWINGS
5. ROOFING SYSTEM, REFER TO ROOF PLAN AND ROOF DETAILS
6. DUCTWORK, REFER TO MECHANICAL DRAWINGS
7. RATED WALL ASSEMBLY, REFER TO PARTITION TYPES AND LIFE SAFETY PLAN
8. ROOF EXHAUST FAN, REFER TO MECHANICAL DRAWINGS
9. LIGHT FIXTURE, REFER TO ELECTRICAL DRAWINGS
10. HIGH VOLUME, LOW VELOCITY FAN
11. TUBULAR CAGE LADDER, REFER TO ROOF DETAILS
12. MECHANICAL LOUVER, REFER TO WINDOW TYPES AND MECHANICAL DRAWINGS
13. RADIO MAST ANTENNA/REPEATER, REFER TO TECHNOLOGY DRAWINGS

tsk
225 South Arlington Avenue,
Suite A
Reno NV, 89501
phone: 775.857.2949
fax: 775.857.2403
www.tska.com

NOLBY M HARPSTEAD
REGISTERED
No. 8775
01/04/2024
ARCHITECT
STATE OF NEVADA

THESE DRAWINGS AND SPECIFICATIONS ARE THE PROPERTY OF TATE SNYDER KIMSEY ARCHITECTS AND MAY NOT BE REPRODUCED OR USED FOR ANY PURPOSE WITHOUT THE ARCHITECTS WRITTEN CONSENT. AS INSTRUMENTS OF SERVICE, THESE DOCUMENTS ARE NOT FINAL AND READY FOR USE, AND THEREFORE NOT VALID, UNLESS THEY ARE SEALED, SIGNED AND DATED.
Copyright, Ltd 2024

Consultant

PLEASE RECYCLE

Project
SPARKS Fire Station #6

6963 SCHEIDBAR ROAD, SPARKS NEVADA 89436

Job No: 22-043

Owner
CITY OF SPARKS

CITY OF SPARKS FIRE DEPARTMENT Est. 1905

BID SET

REVISIONS		
REV	DATE	DESCRIPTION

Sheet Title
BUILDING SECTIONS

Date: JANUARY 4, 2024
Sheet No:
A7.02

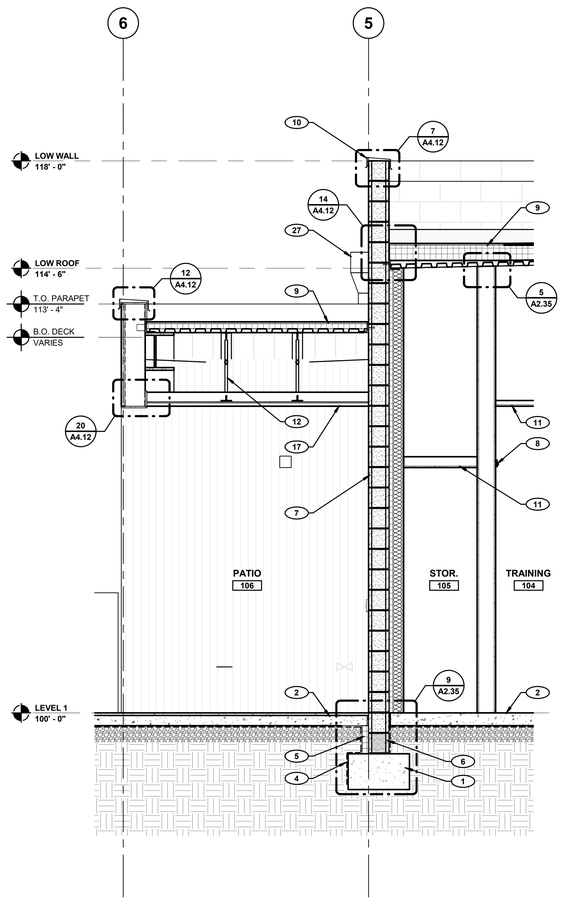

4 WALL SECTION
SCALE: 1/2" = 1'-0"

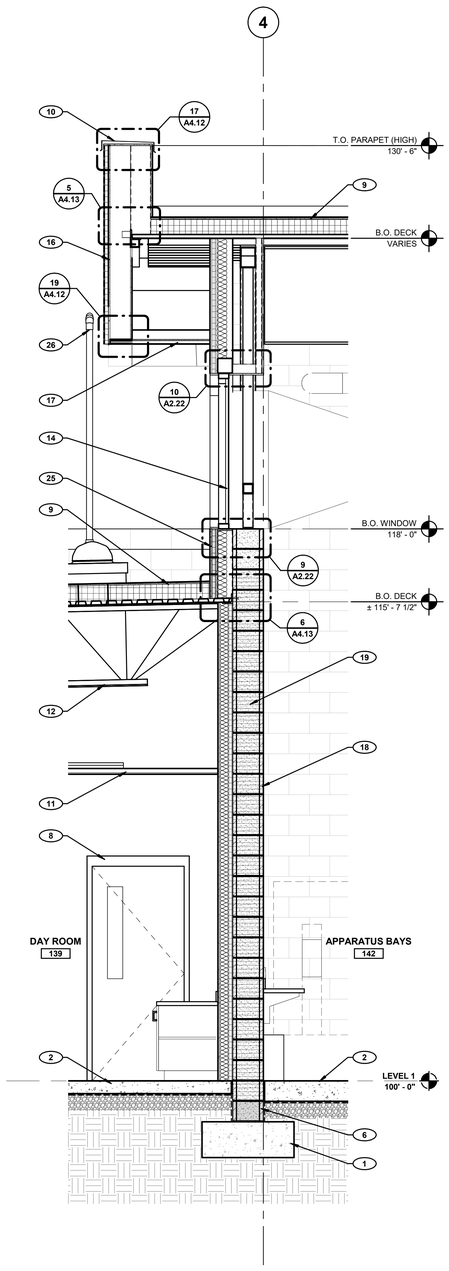

3 WALL SECTION
SCALE: 1/2" = 1'-0"

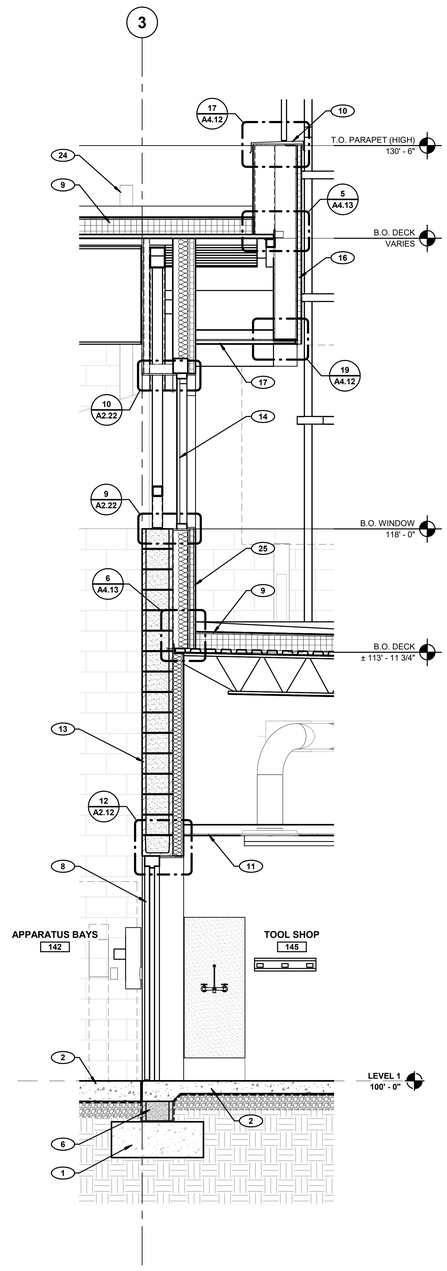

2 WALL SECTION
SCALE: 1/2" = 1'-0"

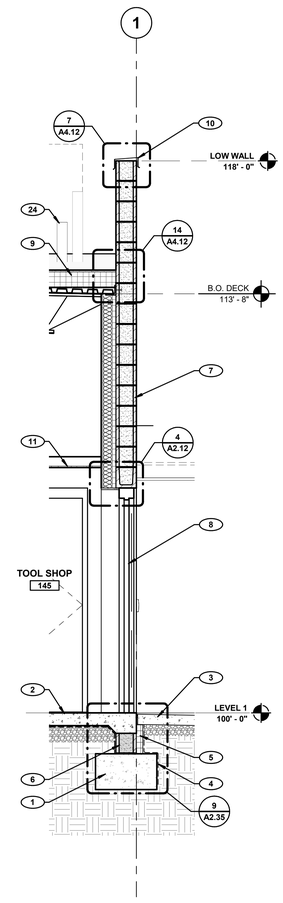

1 WALL SECTION
SCALE: 1/2" = 1'-0"

GENERAL NOTES

1. ALL TOP OF PARAPET (T.O.P.) AND TOP OF WALL (T.O.W.) ELEVATION INDICATED ARE MEASURED FROM FINISH FLOOR ELEVATION.
2. REFER TO DIMENSION PLAN FOR WALL TYPES.
3. REFER TO SHEET A4.11 FOR ROOF TYPES AND DETAILS.
4. REFER TO FINISH SCHEDULE FOR FLOOR, WALL, AND CEILING FINISHES.
5. REFER TO EXTERIOR ELEVATIONS FOR CMU COLOR / TEXTURE.
6. PAINT ALL EXPOSED INTERIOR AND EXTERIOR STRUCTURAL STEEL. SEE FINISH SCHEDULE AND ELEVATIONS.
7. REFER TO STRUCTURAL DRAWINGS FOR FOOTING AND SLAB REQUIREMENTS.
8. ALL CONCRETE BLOCK SURFACES ADJACENT TO SOIL BERMS AND PLANTERS SHALL BE PROVIDED WITH A MONOLITHIC WATERPROOF SYSTEM EXTENDING FROM BOTTOM OF FOOTING TO 2" ABOVE SOIL.
9. GRAY CMU IS ACCEPTABLE BELOW GRADE.
10. PROVIDE APPROPRIATE FIRE STOPPING AT ALL FIRE-RATED PARTITIONS.
11. ALL PENETRATIONS THROUGH WALLS WITH SOUND INSULATION SHALL BE SEALED TIGHT WITH ACOUSTICAL INSULATION AND SEALANT.
12. ALL DISSIMILAR MATERIALS TO RECEIVE SEALANT PRIOR TO PAINTING.
13. PROVIDE EXPANSION JOINT MATERIAL BETWEEN CMU WALL AND CONCRETE FLOOR.

KEYNOTES

1. CONCRETE FOOTING, REFER TO STRUCTURAL DRAWINGS
2. CONCRETE SLAB OVER VAPOR BARRIER AND ENGINEERED FILL, REFER TO STRUCTURAL DRAWINGS AND SOILS REPORT FOR ADDITIONAL INFORMATION
3. CONCRETE APRON / SIDEWALK, REFER TO CIVIL DRAWINGS FOR ADDITIONAL INFORMATION
4. WATERPROOFING, REFER TO SPECIFICATIONS
5. PERIMETER SLAB INSULATION AT GRADE
6. STANDARD GRAY CMU BELOW GRADE AND/OR WHERE IT IS NOT VISIBLE FROM THE EXTERIOR IN ANY ANGLE
7. GROUND-FACE MASONRY UNIT (8" x 8" x 16") WITH 1-1/2" RIGID INSULATION ATTACHED BY IMPALING PIN AND 5/8" GYPSUM BOARD OVER 3-5/8" METAL STUD WITH R-13 BATT INSULATION
8. DOOR, REFER TO DOOR SCHEDULE AND DETAILS
9. ROOFING SYSTEM, REFER TO ROOF PLAN AND ROOF DETAILS
10. METAL COPING, REFER TO ROOF DETAILS
11. CEILING AS SCHEDULED, REFER TO REFLECTED CEILING PLAN FOR TYPE
12. STEEL JOIST, REFER TO STRUCTURAL DRAWINGS
13. GROUND-FACE MASONRY UNIT (12" x 8" x 16"), REFER TO STRUCTURAL DRAWINGS
14. WINDOW, REFER TO WINDOW TYPES AND DETAILS
15. VERTICAL CORRUGATED METAL PANEL RAINSCREEN OVER 1/2" SUBGIRT WITH AIR BARRIER OVER CONCRETE MASONRY UNIT
16. EXTERIOR INSULATION FINISH SYSTEM (EIFS) OVER GLASS-MAT SHEATHING OVER METAL STUD FRAMING
17. COMPACT EXTERIOR PHENOLIC PANEL WITH H-PROFILE SUPPORT OVER GLASS-MAT SHEATHING OVER METAL STUD FRAMING
18. GROUND-FACE MASONRY UNIT (12" x 8" x 16") WITH 1-1/2" RIGID INSULATION ATTACHED BY IMPALING PIN AND 5/8" GYPSUM BOARD OVER 3-5/8" METAL STUD WITH R-13 BATT INSULATION
19. RATED WALL ASSEMBLY, REFER TO PARTITION TYPES AND LIFE SAFETY PLAN
20. LANDSCAPE / PLANTING AREA, REFER TO SITE PLAN AND LANDSCAPE DRAWINGS
21. OVERHEAD SECTIONAL DOOR REFER TO DOOR TYPES AND DOOR SCHEDULE
22. ENTRY SHADE CANOPY / TRELLIS
23. FIRE STATION NUMERICAL SIGNAGE
24. MECHANICAL PIPE PENETRATION, REFER TO MECHANICAL DRAWINGS
25. VERTICAL CORRUGATED METAL PANEL RAINSCREEN OVER 1/2" SUBGIRT WITH AIR BARRIER OVER EXTERIOR SHEATHING AND 6" METAL STUDS WITH R-13 BATT INSULATION
26. RADIO MAST ANTENNA/REPEATER, REFER TO TECHNOLOGY DRAWINGS
27. ROOF SCUPPER WITH COLLECTOR BOX AND DOWNSPOUT, REFER TO PLUMBING DRAWINGS
28. RESILIENT ATHLETIC WALL PANEL (W-8), REFER TO FINISH SCHEDULE
29. 1" SLAB DEPRESSION FOR EXTREME RUBBER GYM FLOORING, REFER TO FLOOR FINISH PLAN

tsk

225 South Arlington Avenue,
Suite A
Reno NV, 89501
phone: 775.857.2949
fax: 775.857.2403
www.tska.com

THESE DRAWINGS AND SPECIFICATIONS ARE THE PROPERTY OF TATE SNYDER KIMSEY ARCHITECTS AND MAY NOT BE REPRODUCED OR USED FOR ANY PURPOSE WITHOUT THE ARCHITECTS WRITTEN CONSENT. AS INSTRUMENTS OF SERVICE, THESE DOCUMENTS ARE NOT FINAL AND READY FOR USE, AND THEREFORE NOT VALID, UNLESS THEY ARE SEALED, SIGNED AND DATED.

Copyright, Ltd 2024

Consultant

PLEASE RECYCLE

Project

SPARKS Fire Station #6

6963 SCHEIDBAR ROAD, SPARKS NEVADA 89436

Job No: 22-043

Owner

CITY OF SPARKS

BID SET

REVISIONS		
REV	DATE	DESCRIPTION

Sheet Title

WALL SECTIONS

Date: JANUARY 4, 2024

Sheet No:

A7.11

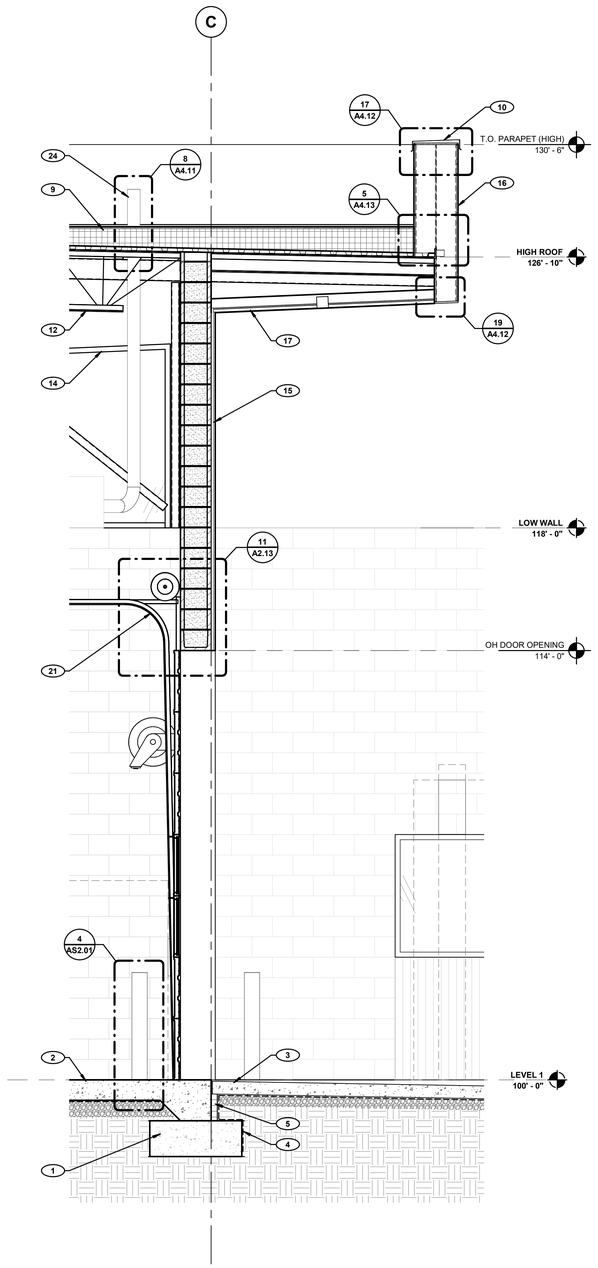

7 WALL SECTION
SCALE: 1/2" = 1'-0"

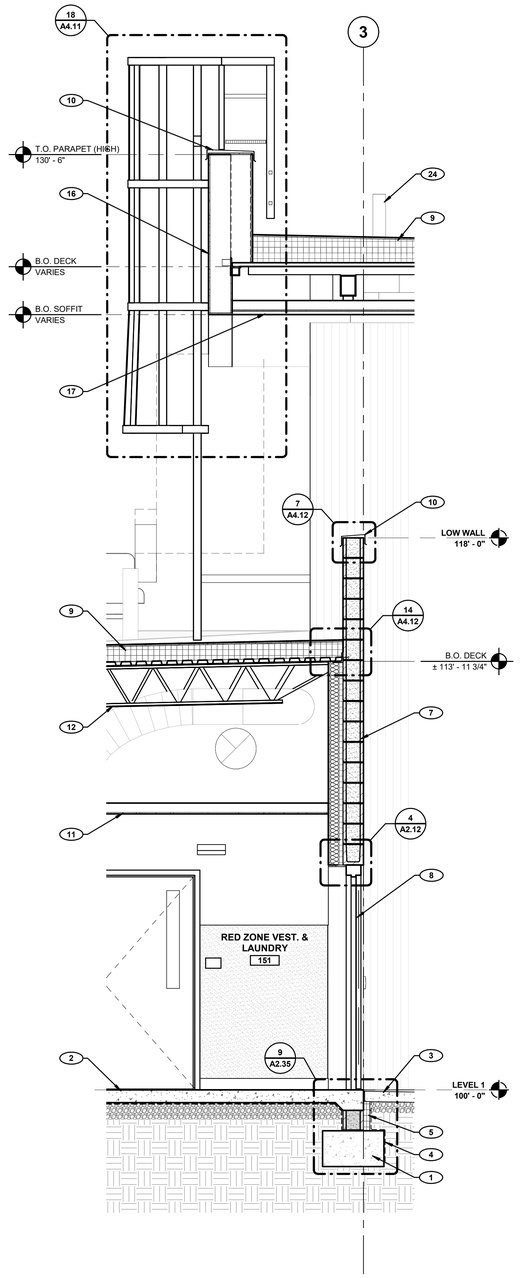

6 WALL SECTION
SCALE: 1/2" = 1'-0"

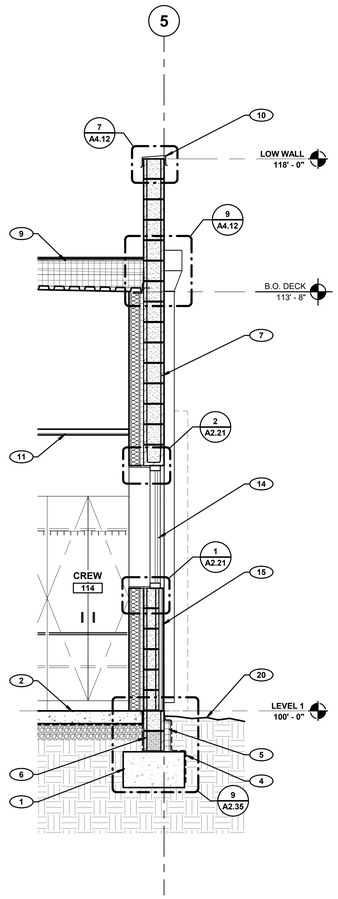

5 WALL SECTION
SCALE: 1/2" = 1'-0"

GENERAL NOTES

1. ALL TOP OF PARAPET (T.O.P.) AND TOP OF WALL (T.O.W.) ELEVATION INDICATED ARE MEASURED FROM FINISH FLOOR ELEVATION.
2. REFER TO DIMENSION PLAN FOR WALL TYPES.
3. REFER TO SHEET A4.11 FOR ROOF TYPES AND DETAILS.
4. REFER TO FINISH SCHEDULE FOR FLOOR, WALL, AND CEILING FINISHES.
5. REFER TO EXTERIOR ELEVATIONS FOR CMU COLOR / TEXTURE.
6. PAINT ALL EXPOSED INTERIOR AND EXTERIOR STRUCTURAL STEEL. SEE FINISH SCHEDULE AND ELEVATIONS.
7. REFER TO STRUCTURAL DRAWINGS FOR FOOTING AND SLAB REQUIREMENTS.
8. ALL CONCRETE BLOCK SURFACES ADJACENT TO SOIL BERMS AND PLANTERS SHALL BE PROVIDED WITH A MONOLITHIC WATERPROOF SYSTEM EXTENDING FROM BOTTOM OF FOOTING TO 2" ABOVE SOIL.
9. GRAY CMU IS ACCEPTABLE BELOW GRADE.
10. PROVIDE APPROPRIATE FIRE STOPPING AT ALL FIRE-RATED PARTITIONS.
11. ALL PENETRATIONS THROUGH WALLS WITH SOUND INSULATION SHALL BE SEALED TIGHT WITH ACOUSTICAL INSULATION AND SEALANT.
12. ALL DISSIMILAR MATERIALS TO RECEIVE SEALANT PRIOR TO PAINTING.
13. PROVIDE EXPANSION JOINT MATERIAL BETWEEN CMU WALL AND CONCRETE FLOOR.

KEYNOTES

1. CONCRETE FOOTING, REFER TO STRUCTURAL DRAWINGS
2. CONCRETE SLAB OVER VAPOR BARRIER AND ENGINEERED FILL, REFER TO STRUCTURAL DRAWINGS AND SOILS REPORT FOR ADDITIONAL INFORMATION
3. CONCRETE APRON / SIDEWALK, REFER TO CIVIL DRAWINGS FOR ADDITIONAL INFORMATION
4. WATERPROOFING, REFER TO SPECIFICATIONS
5. PERIMETER SLAB INSULATION AT GRADE
6. STANDARD GRAY CMU BELOW GRADE AND/OR WHERE IT IS NOT VISIBLE FROM THE EXTERIOR IN ANY ANGLE
7. GROUND-FACE MASONRY UNIT (8" x 8" x 16") WITH 1-1/2" RIGID INSULATION ATTACHED BY IMPALING PIN AND 5/8" GYPSUM BOARD OVER 3-5/8" METAL STUD WITH R-13 BATT INSULATION
8. DOOR, REFER TO DOOR SCHEDULE AND DETAILS
9. ROOFING SYSTEM, REFER TO ROOF PLAN AND ROOF DETAILS
10. METAL COPING, REFER TO ROOF DETAILS
11. CEILING AS SCHEDULED, REFER TO REFLECTED CEILING PLAN FOR TYPE
12. STEEL JOIST, REFER TO STRUCTURAL DRAWINGS
13. GROUND-FACE MASONRY UNIT (12" x 8" x 16"), REFER TO STRUCTURAL DRAWINGS
14. WINDOW, REFER TO WINDOW TYPES AND DETAILS
15. VERTICAL CORRUGATED METAL PANEL RAINSCREEN OVER 1/2" SUBGIRT WITH AIR BARRIER OVER CONCRETE MASONRY UNIT
16. EXTERIOR INSULATION FINISH SYSTEM (EIFS) OVER GLASS-MAT SHEATHING OVER METAL STUD FRAMING
17. COMPACT EXTERIOR PHENOLIC PANEL WITH H-PROFILE SUPPORT OVER GLASS-MAT SHEATHING OVER METAL STUD FRAMING
18. GROUND-FACE MASONRY UNIT (12" x 8" x 16") WITH 1-1/2" RIGID INSULATION ATTACHED BY IMPALING PIN AND 5/8" GYPSUM BOARD OVER 3-5/8" METAL STUD WITH R-13 BATT INSULATION
19. RATED WALL ASSEMBLY, REFER TO PARTITION TYPES AND LIFE SAFETY PLAN
20. LANDSCAPE / PLANTING AREA, REFER TO SITE PLAN AND LANDSCAPE DRAWINGS
21. OVERHEAD SECTIONAL DOOR REFER TO DOOR TYPES AND DOOR SCHEDULE
22. ENTRY SHADE CANOPY / TRELLIS
23. FIRE STATION NUMERICAL SIGNAGE
24. MECHANICAL PIPE PENETRATION, REFER TO MECHANICAL DRAWINGS
25. VERTICAL CORRUGATED METAL PANEL RAINSCREEN OVER 1/2" SUBGIRT WITH AIR BARRIER OVER EXTERIOR SHEATHING AND 6" METAL STUDS WITH R-13 BATT INSULATION
26. RADIO MAST ANTENNA/REPEATER, REFER TO TECHNOLOGY DRAWINGS
27. ROOF SCUPPER WITH COLLECTOR BOX AND DOWNSPOUT, REFER TO PLUMBING DRAWINGS
28. RESILIENT ATHLETIC WALL PANEL (W-8), REFER TO FINISH SCHEDULE
29. 1" SLAB DEPRESSION FOR EXTREME RUBBER GYM FLOORING, REFER TO FLOOR FINISH PLAN

tsk

225 South Arlington Avenue,
Suite A
Reno NV, 89501
phone: 775.857.2949
fax: 775.857.2403
www.tska.com

THESE DRAWINGS AND SPECIFICATIONS ARE THE PROPERTY OF TATE SNYDER KIMSEY ARCHITECTS AND MAY NOT BE REPRODUCED OR USED FOR ANY PURPOSE WITHOUT THE ARCHITECTS WRITTEN CONSENT. AS INSTRUMENTS OF SERVICE, THESE DOCUMENTS ARE NOT FINAL AND READY FOR USE, AND THEREFORE NOT VALID, UNLESS THEY ARE SEALED, SIGNED AND DATED.

Copyright, Ltd 2024

Consultant

PLEASE RECYCLE

Project

SPARKS Fire Station #6

6963 SCHEIDBAR ROAD, SPARKS NEVADA 89436

Job No: 22-043

Owner

CITY OF SPARKS

BID SET

REVISIONS		
REV	DATE	DESCRIPTION

Sheet Title

WALL SECTIONS

Date: JANUARY 4, 2024

Sheet No:

A7.12

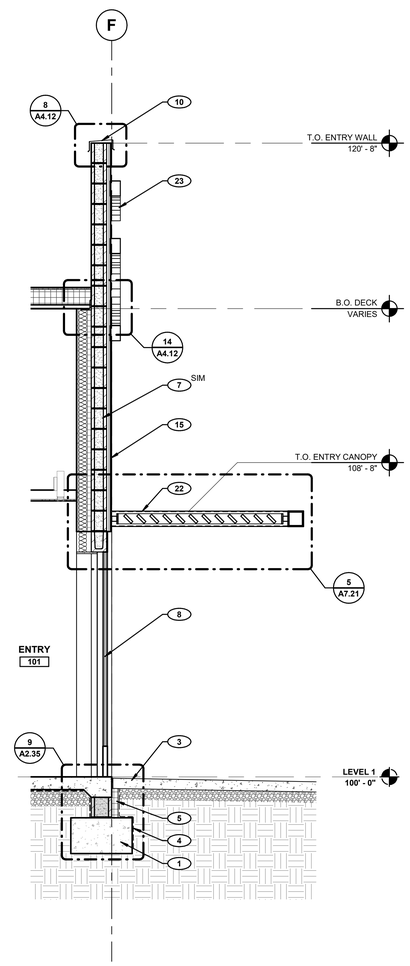

10 WALL SECTION 10
SCALE: 1/2" = 1'-0"

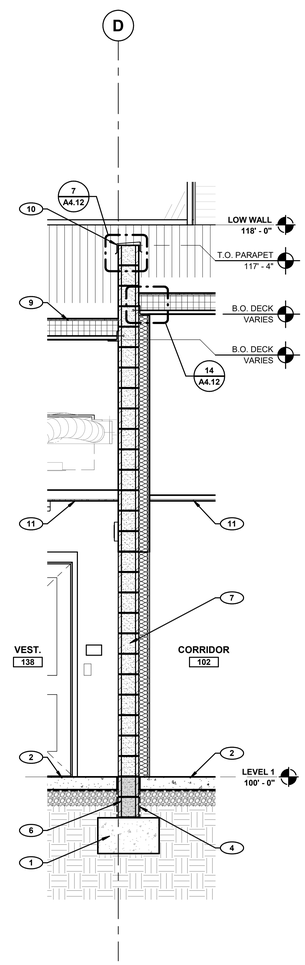

9 WALL SECTION
SCALE: 1/2" = 1'-0"

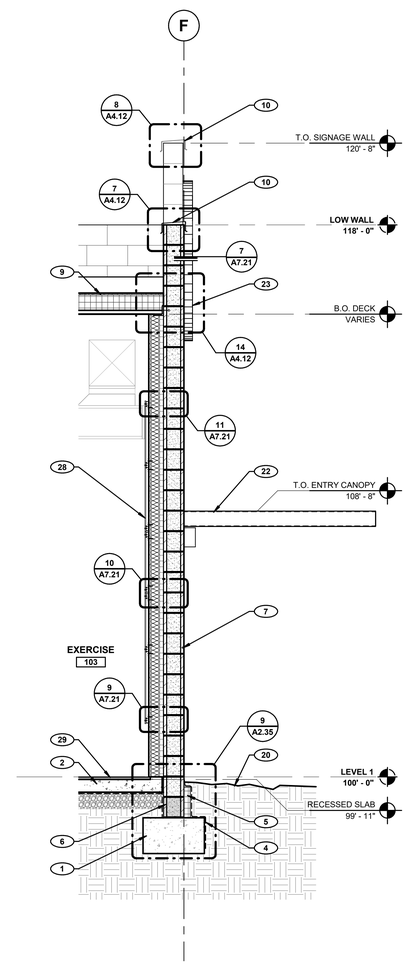

8 WALL SECTION
SCALE: 1/2" = 1'-0"

GENERAL NOTES

1. ALL TOP OF PARAPET (T.O.P.) AND TOP OF WALL (T.O.W.) ELEVATION INDICATED ARE MEASURED FROM FINISH FLOOR ELEVATION.
2. REFER TO DIMENSION PLAN FOR WALL TYPES.
3. REFER TO SHEET A4.11 FOR ROOF TYPES AND DETAILS.
4. REFER TO FINISH SCHEDULE FOR FLOOR, WALL, AND CEILING FINISHES.
5. REFER TO EXTERIOR ELEVATIONS FOR CMU COLOR / TEXTURE.
6. PAINT ALL EXPOSED INTERIOR AND EXTERIOR STRUCTURAL STEEL. SEE FINISH SCHEDULE AND ELEVATIONS.
7. REFER TO STRUCTURAL DRAWINGS FOR FOOTING AND SLAB REQUIREMENTS.
8. ALL CONCRETE BLOCK SURFACES ADJACENT TO SOIL BERMS AND PLANTERS SHALL BE PROVIDED WITH A MONOLITHIC WATERPROOF SYSTEM EXTENDING FROM BOTTOM OF FOOTING TO 2" ABOVE SOIL.
9. GRAY CMU IS ACCEPTABLE BELOW GRADE.
10. PROVIDE APPROPRIATE FIRE STOPPING AT ALL FIRE-RATED PARTITIONS.
11. ALL PENETRATIONS THROUGH WALLS WITH SOUND INSULATION SHALL BE SEALED TIGHT WITH ACOUSTICAL INSULATION AND SEALANT.
12. ALL DISSIMILAR MATERIALS TO RECEIVE SEALANT PRIOR TO PAINTING.
13. PROVIDE EXPANSION JOINT MATERIAL BETWEEN CMU WALL AND CONCRETE FLOOR.

KEYNOTES

1. CONCRETE FOOTING, REFER TO STRUCTURAL DRAWINGS
2. CONCRETE SLAB OVER VAPOR BARRIER AND ENGINEERED FILL, REFER TO STRUCTURAL DRAWINGS AND SOILS REPORT FOR ADDITIONAL INFORMATION
3. CONCRETE APRON / SIDEWALK, REFER TO CIVIL DRAWINGS FOR ADDITIONAL INFORMATION
4. WATERPROOFING, REFER TO SPECIFICATIONS
5. PERIMETER SLAB INSULATION AT GRADE
6. STANDARD GRAY CMU BELOW GRADE AND/OR WHERE IT IS NOT VISIBLE FROM THE EXTERIOR IN ANY ANGLE
7. GROUND-FACE MASONRY UNIT (8" x 8" x 16") WITH 1-1/2" RIGID INSULATION ATTACHED BY IMPALING PIN AND 5/8" GYPSUM BOARD OVER 3-5/8" METAL STUD WITH R-13 BATT INSULATION
8. DOOR, REFER TO DOOR SCHEDULE AND DETAILS
9. ROOFING SYSTEM, REFER TO ROOF PLAN AND ROOF DETAILS
10. METAL COPING, REFER TO ROOF DETAILS
11. CEILING AS SCHEDULED, REFER TO REFLECTED CEILING PLAN FOR TYPE
12. STEEL JOIST, REFER TO STRUCTURAL DRAWINGS
13. GROUND-FACE MASONRY UNIT (12" x 8" x 16"), REFER TO STRUCTURAL DRAWINGS
14. WINDOW, REFER TO WINDOW TYPES AND DETAILS
15. VERTICAL CORRUGATED METAL PANEL RAINSCREEN OVER 1/2" SUBGIRT WITH AIR BARRIER OVER CONCRETE MASONRY UNIT
16. EXTERIOR INSULATION FINISH SYSTEM (EIFS) OVER GLASS-MAT SHEATHING OVER METAL STUD FRAMING
17. COMPACT EXTERIOR PHENOLIC PANEL WITH H-PROFILE SUPPORT OVER GLASS-MAT SHEATHING OVER METAL STUD FRAMING
18. GROUND-FACE MASONRY UNIT (12" x 8" x 16") WITH 1-1/2" RIGID INSULATION ATTACHED BY IMPALING PIN AND 5/8" GYPSUM BOARD OVER 3-5/8" METAL STUD WITH R-13 BATT INSULATION
19. RATED WALL ASSEMBLY, REFER TO PARTITION TYPES AND LIFE SAFETY PLAN
20. LANDSCAPE / PLANTING AREA, REFER TO SITE PLAN AND LANDSCAPE DRAWINGS
21. OVERHEAD SECTIONAL DOOR REFER TO DOOR TYPES AND DOOR SCHEDULE
22. ENTRY SHADE CANOPY / TRELLIS
23. FIRE STATION NUMERICAL SIGNAGE
24. MECHANICAL PIPE PENETRATION, REFER TO MECHANICAL DRAWINGS
25. VERTICAL CORRUGATED METAL PANEL RAINSCREEN OVER 1/2" SUBGIRT WITH AIR BARRIER OVER EXTERIOR SHEATHING AND 6" METAL STUDS WITH R-13 BATT INSULATION
26. RADIO MAST ANTENNA/REPEATER, REFER TO TECHNOLOGY DRAWINGS
27. ROOF SCUPPER WITH COLLECTOR BOX AND DOWNSPOUT, REFER TO PLUMBING DRAWINGS
28. RESILIENT ATHLETIC WALL PANEL (W-8), REFER TO FINISH SCHEDULE
29. 1" SLAB DEPRESSION FOR EXTREME RUBBER GYM FLOORING, REFER TO FLOOR FINISH PLAN

tsk

225 South Arlington Avenue,
Suite A
Reno NV, 89501
phone: 775.857.2949
fax: 775.857.2403
www.tska.com

NOLBY M HARPSTEAD
REGISTERED
No. 8775
01/04/2024
ARCHITECT
STATE OF NEVADA

THESE DRAWINGS AND SPECIFICATIONS ARE THE PROPERTY OF TATE SNYDER KIMSEY ARCHITECTS AND MAY NOT BE REPRODUCED OR USED FOR ANY PURPOSE WITHOUT THE ARCHITECTS WRITTEN CONSENT. AS INSTRUMENTS OF SERVICE, THESE DOCUMENTS ARE NOT FINAL AND READY FOR USE, AND THEREFORE NOT VALID, UNLESS THEY ARE SEALED, SIGNED AND DATED.

Copyright, Ltd 2024

Consultant

PLEASE RECYCLE

Project

SPARKS Fire Station #6

6963 SCHEIDBAR ROAD, SPARKS NEVADA 89436

Job No: 22-043

Owner

CITY OF SPARKS

BID SET

REVISIONS

REV	DATE	DESCRIPTION
A	05.18.23	Review Comments

Sheet Title

WALL SECTIONS

Date: JANUARY 4, 2024

Sheet No:

A7.13

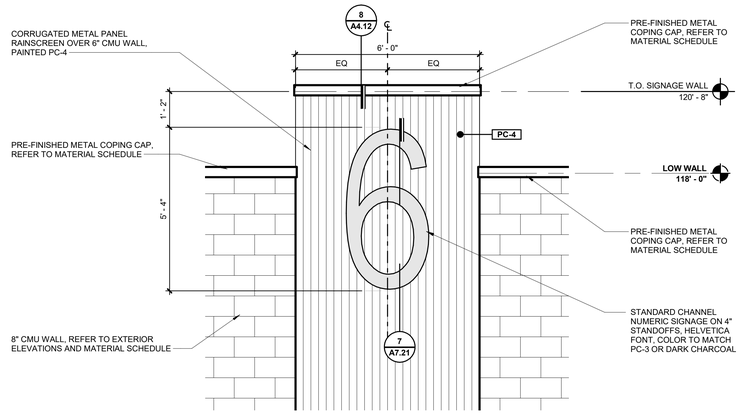

8 BUILDING NUMERIC SIGNAGE
SCALE: 1/2" = 1'-0"

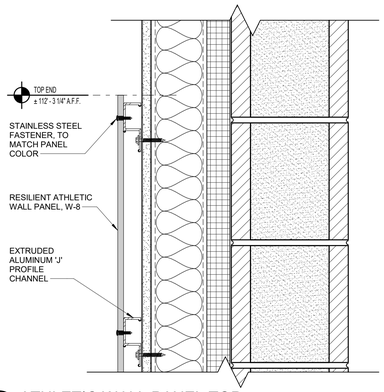

11 ATHLETIC WALL PANEL TOP
SCALE: 3" = 1'-0"

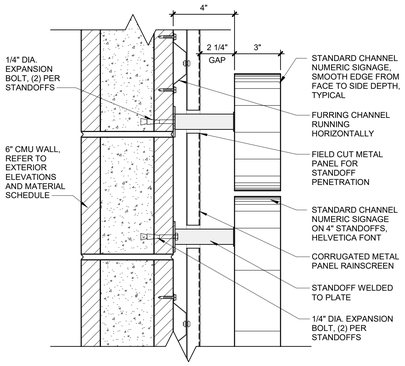

7 NUMERIC SIGNAGE DETAIL
SCALE: 3" = 1'-0"

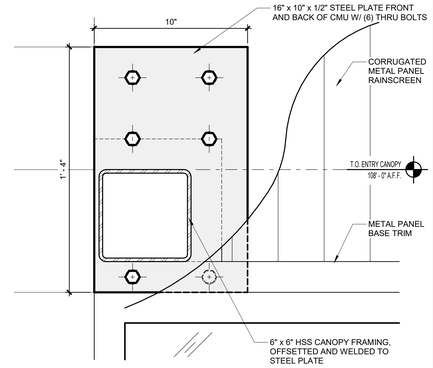

3 ENTRY CANOPY STEEL PLATE CONNECTION
SCALE: 3" = 1'-0"

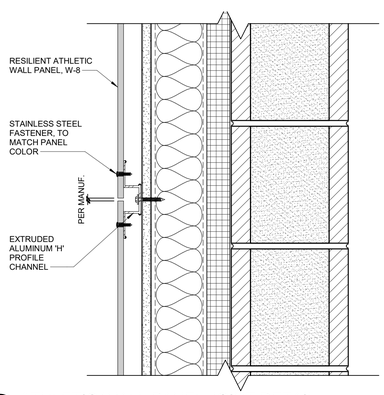

10 ATHLETIC WALL PANEL JOINT DETAIL
SCALE: 3" = 1'-0"

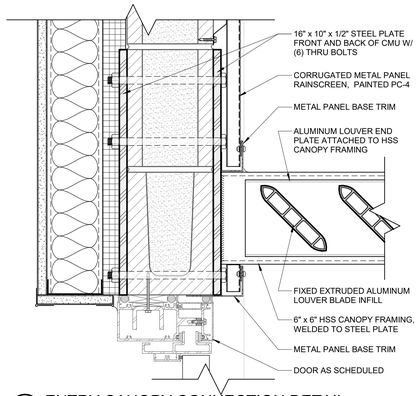

6 ENTRY CANOPY CONNECTION DETAIL
SCALE: 3" = 1'-0"

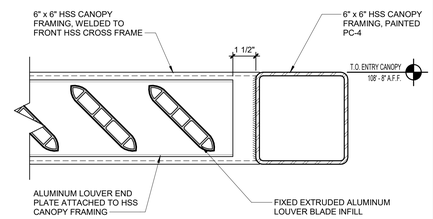

2 ENTRY CANOPY END DETAIL
SCALE: 3" = 1'-0"

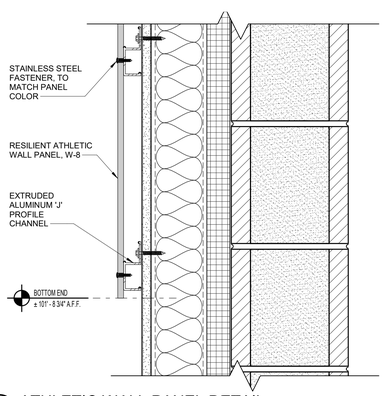

9 ATHLETIC WALL PANEL DETAIL
SCALE: 3" = 1'-0"

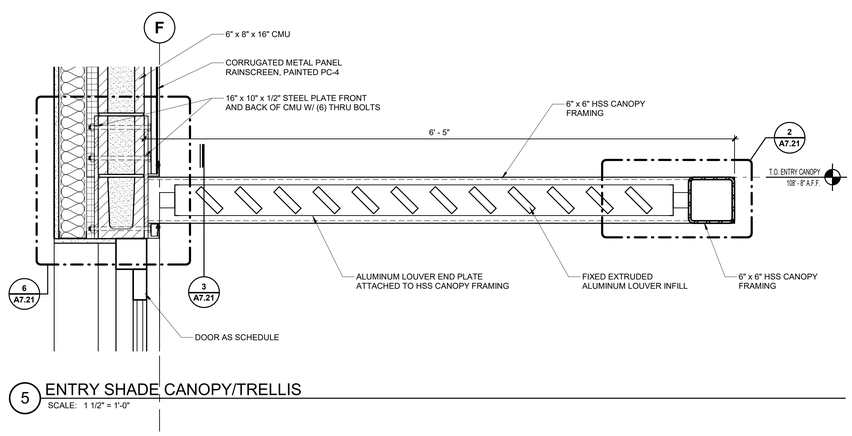

5 ENTRY SHADE CANOPY/TRELLIS
SCALE: 1 1/2" = 1'-0"

tsk
225 South Arlington Avenue,
Suite A
Reno NV, 89501
phone: 775.857.2949
fax: 775.857.2403
www.tska.com

KOLBY M HARPSTEAD
REGISTERED
No. 8775
01/04/2024
ARCHITECT
STATE OF NEVADA

THESE DRAWINGS AND SPECIFICATIONS ARE THE PROPERTY OF TATE SNYDER KIMSEY ARCHITECTS AND MAY NOT BE REPRODUCED OR USED FOR ANY PURPOSE WITHOUT THE ARCHITECTS WRITTEN CONSENT. AS INSTRUMENTS OF SERVICE, THESE DOCUMENTS ARE NOT FINAL AND READY FOR USE, AND THEREFORE NOT VALID, UNLESS THEY ARE SEALED, SIGNED AND DATED.

Copyright, Ltd 2024

Consultant

PLEASE RECYCLE

Project
SPARKS Fire Station #6

6963 SCHEIDBAR ROAD, SPARKS NEVADA 89436

Job No: 22-043

Owner
CITY OF SPARKS

BID SET

REVISIONS

REV	DATE	DESCRIPTION
A	05.18.23	Review Comments

Sheet Title
SECTION DETAILS

Date: JANUARY 4, 2024
Sheet No:
A7.21

CASEWORK SCHEDULE

CABINET NO.	SIZE W	SIZE H	SIZE D	DESCRIPTION
CW_Counter Top-U Shaped		30"	24"	
100M	72"	31"	24"	
101	24"	31"	24"	
152	36"	36"	24"	
152	42"	36"	30"	
154 B	36"	34"	24"	
155M	36"	36"	24"	
211	12"	34"	24"	
211	15"	36"	30"	
211	18"	36"	24"	
211	24"	34"	30"	
220	36"	36"	24"	
222	40"	34"	24"	
222	36"	34"	30"	
222	36"	36"	24"	
222	36"	36"	30"	
301	15"	30"	12"	
301	16"	22"	12"	
302	30"	30"	12"	
302	36"	22"	12"	
302	36"	30"	12"	
302	40"	22"	12"	
302	42"	22"	12"	
302	57"	30"	12"	
309	30"	30"	12"	
401	18"	84"	24"	
401	24"	84"	24"	
425M	32"	84"	20"	
Base Cabinet-Filler_36		34 1/2"	24"	
Upper Cabinet-Filler-Wall	4"	22"	12"	

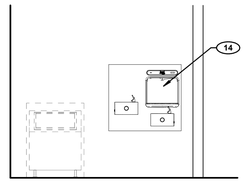

3D ICE 137 - NORTH
SCALE: 3/8" = 1'-0"

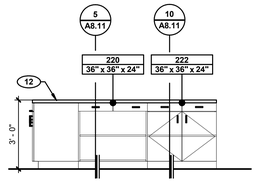

1C KITCHEN 107 CASEWORK ELEVATION
SCALE: 3/8" = 1'-0"

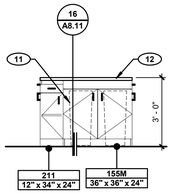

1E KITCHEN 107 CASEWORK ELEVATION
SCALE: 3/8" = 1'-0"

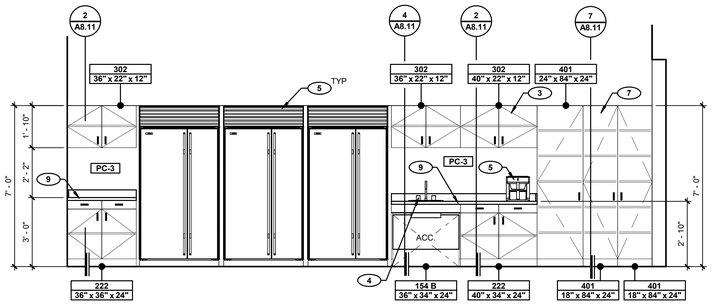

1B KITCHEN 107 CASEWORK ELEVATION
SCALE: 3/8" = 1'-0"

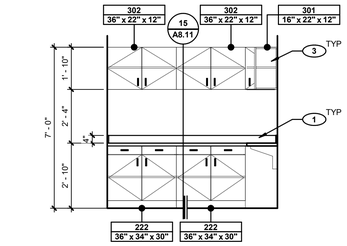

3C EMS CLOSET 136 CASEWORK ELEVATION
SCALE: 3/8" = 1'-0"

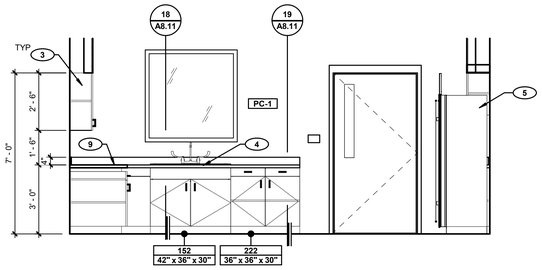

1D KITCHEN 107 CASEWORK ELEVATION
SCALE: 3/8" = 1'-0"

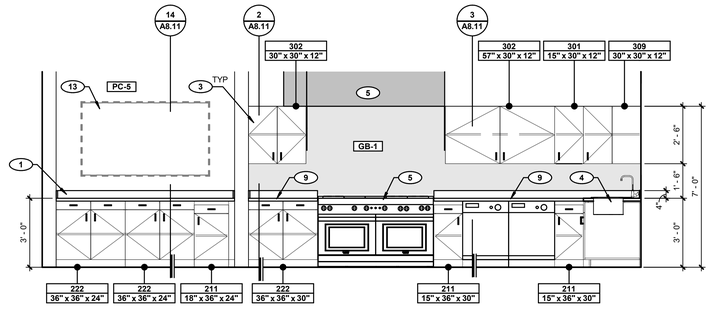

1A KITCHEN 107 CASEWORK ELEVATION
SCALE: 3/8" = 1'-0"

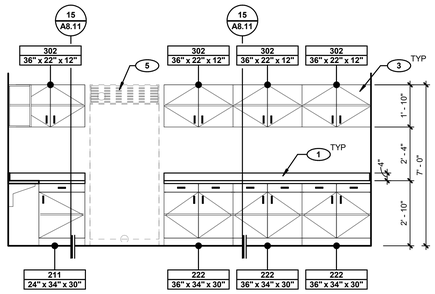

3A EMS CLOSET 136 CASEWORK ELEVATION
SCALE: 3/8" = 1'-0"

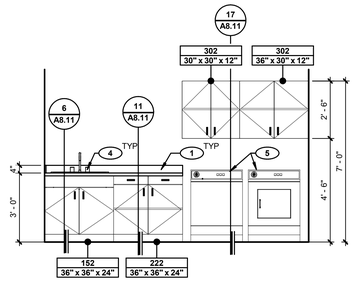

2A LAUNDRY 121 CASEWORK ELEVATION
SCALE: 3/8" = 1'-0"

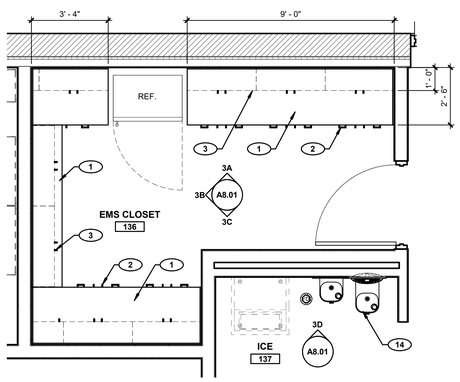

3 EMS CLOSET 136 CASEWORK PLAN
SCALE: 3/8" = 1'-0"

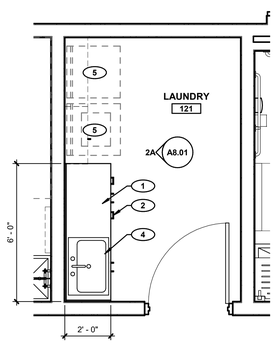

2 LAUNDRY 121 CASEWORK PLAN
SCALE: 3/8" = 1'-0"

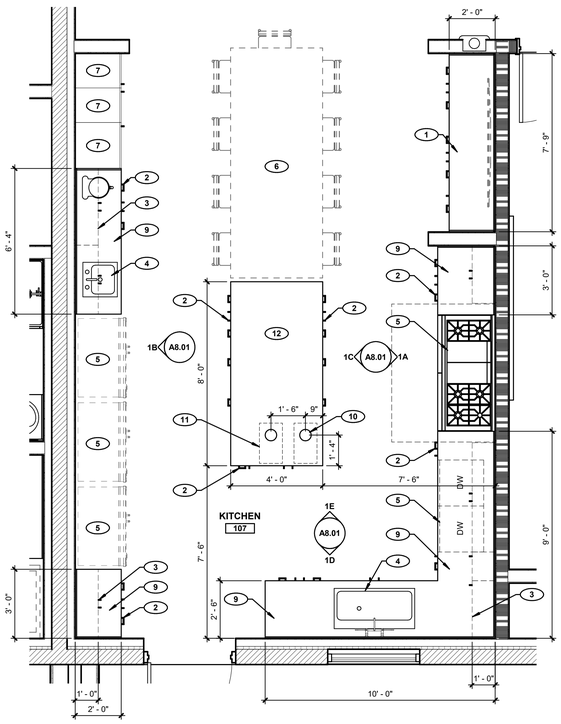

1 KITCHEN 107 CASEWORK PLAN
SCALE: 3/8" = 1'-0"

GENERAL NOTES

1. ALL DIMENSIONS ARE TAKEN FROM FACE OF FINISH.
2. FOR CASEWORK FINISHES, REFER TO MATERIAL SCHEDULE ON SHEET A2.01.
3. WHERE BACKSPLASH OCCURS, PROVIDE SPLASH AT SIDE WALLS ADJACENT TO COUNTER.
4. FIELD VERIFY DIMENSIONS PRIOR TO MANUFACTURING ANY CASEWORK. VERIFY MINIMUM CUTOUT DIMENSION FOR ALL APPLIANCES WITH OWNER.
5. PROVIDE SUFFICIENT BLOCKING ON WALLS FOR ALL WALL MOUNTED CASEWORK.
6. ACC.: INDICATES LOCATIONS WHERE CASEWORK MUST BE CONSTRUCTED TO COMPLY WITH THE REQUIREMENTS FOR ACCESIBILITY. REFER TO GENERAL ACCESSIBILITY DETAILS.
7. ALL EQUIPMENT (O.F.O.I. AND C.F.C.I.) SHALL COMPLY WITH ACCESSIBILITY REQUIREMENTS.
8. COORDINATE WITH FOOD SERVICE AND MPE DRAWINGS FOR ALL PLUMBING FIXTURES AND POWER/DATA REQUIREMENTS.
9. FURNITURE SHOWN DASHED ARE FOR REFERENCE ONLY. REFER TO SHEET A1.41 FOR FURNITURE AND EQUIPMENT PLAN.

KEYNOTES

1. SOLID SURFACE COUNTERTOP WITH BACKSPLASH. (ML-1)
2. BASE CABINET, REFER TO CASEWORK SCHEDULE, (PL-1)
3. UPPER CABINET, REFER TO CASEWORK SCHEDULE. (PL-1)
4. SINK, REFER TO PLUMBING DRAWINGS.
5. APPLIANCE, REFER TO FURNITURE AND EQUIPMENT PLAN
6. FURNITURE (SHOWN DASHED), REFER TO FURNITURE AND EQUIPMENT PLAN
7. TALL PANTRY CABINET, REFER TO CASEWORK SCHEDULE
8. 2-1/2" DIAMETER GROMMET FOR DATA / POWER, TYPICAL
9. STAINLESS STEEL COUNTERTOP WITH BACKSPLASH AND MARINE EDGE
10. 6" DIAMETER STAINLESS STEEL IN-COUNTER TRASH CHUTE
11. TRASH BIN (SHOWN DASHED) UNDERNEATH COUNTERTOP
12. STAINLESS STEEL ISLAND COUNTERTOP WITH MARINE EDGE
13. TV MONITOR, REFER TO FURNITURE AND EQUIPMENT PLAN
14. DRINKING FOUNTAIN WITH BOTTLE FILLER, REFER TO PLUMBING DRAWINGS
15. 4' x 4' MARKER BOARD, REFER TO FURNITURE AND EQUIPMENT PLAN

tsk
225 South Arlington Avenue,
Suite A
Reno NV, 89501
phone: 775.857.2949
fax: 775.857.2403
www.tska.com

THESE DRAWINGS AND SPECIFICATIONS ARE THE PROPERTY OF TATE SNYDER KIMSEY ARCHITECTS AND MAY NOT BE REPRODUCED OR USED FOR ANY PURPOSE WITHOUT THE ARCHITECTS WRITTEN CONSENT. AS INSTRUMENTS OF SERVICE, THESE DOCUMENTS ARE NOT FINAL AND READY FOR USE, AND THEREFORE NOT VALID, UNLESS THEY ARE SEALED, SIGNED AND DATED.

Copyright, Ltd 2024

Consultant

PLEASE RECYCLE

Project
SPARKS Fire Station #6

6963 SCHEIDBAR ROAD, SPARKS NEVADA 89436

Job No: 22-043

Owner
CITY OF SPARKS

BID SET

REVISIONS		
REV	DATE	DESCRIPTION
A	05.18.23	Review Comments

Sheet Title
CASEWORK PLAN AND ELEVATIONS

Date: JANUARY 4, 2024
Sheet No:
A8.01

CASEWORK SCHEDULE

CABINET NO.	SIZE W	SIZE H	SIZE D	DESCRIPTION
CW_Counter Top-U Shaped		30"	24"	
100M	72"	31"	24"	
101	24"	31"	24"	
152	36"	36"	24"	
152	42"	36"	30"	
154 B	36"	34"	24"	
155M	36"	36"	24"	
211	12"	34"	24"	
211	15"	36"	30"	
211	18"	36"	24"	
211	24"	34"	30"	
220	36"	36"	24"	
222	40"	34"	24"	
222	36"	34"	30"	
222	36"	36"	24"	
222	36"	36"	30"	
301	15"	30"	12"	
301	16"	22"	12"	
302	30"	30"	12"	
302	36"	22"	12"	
302	36"	30"	12"	
302	40"	22"	12"	
302	42"	22"	12"	
302	57"	30"	12"	
309	30"	30"	12"	
401	18"	84"	24"	
401	24"	84"	24"	
425M	32"	84"	20"	
Base Cabinet-Filler_36		34 1/2"	24"	
Upper Cabinet-Filler-Wall	4"	22"	12"	

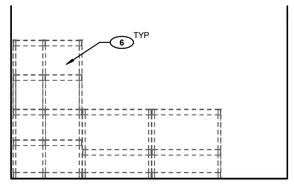

2C STORAGE 134 CASEWORK ELEVATION
SCALE: 3/8" = 1'-0"

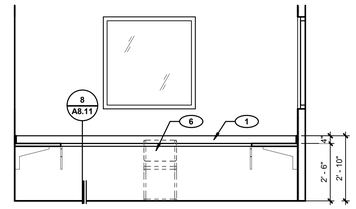

1C OFFICE 141 CASEWORK ELEVATION
SCALE: 3/8" = 1'-0"

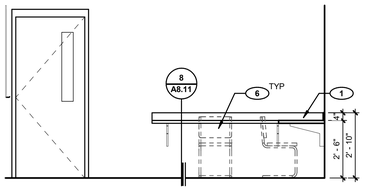

3C STUDY 125 CASEWORK ELEVATION
SCALE: 3/8" = 1'-0"

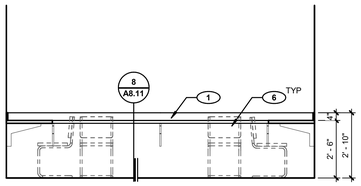

3B STUDY 125 CASEWORK ELEVATION
SCALE: 3/8" = 1'-0"

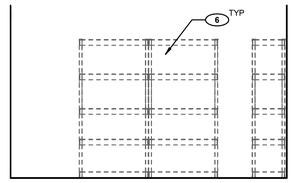

2B STORAGE 134 CASEWORK ELEVATION
SCALE: 3/8" = 1'-0"

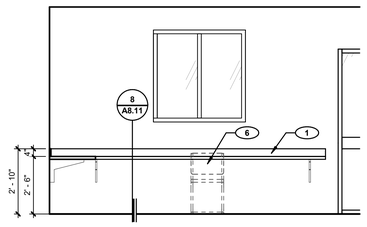

1B OFFICE 141 CASEWORK ELEVATION
SCALE: 3/8" = 1'-0"

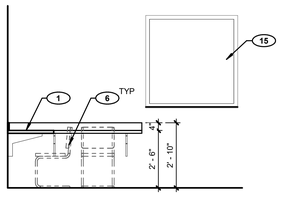

3D STUDY 125 CASEWORK ELEVATION
SCALE: 3/8" = 1'-0"

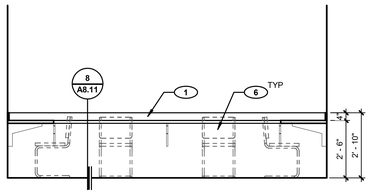

3A STUDY 125 CASEWORK ELEVATION
SCALE: 3/8" = 1'-0"

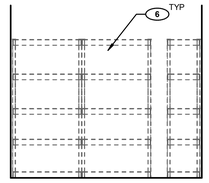

2A STORAGE 134 CASEWORK ELEVATION
SCALE: 3/8" = 1'-0"

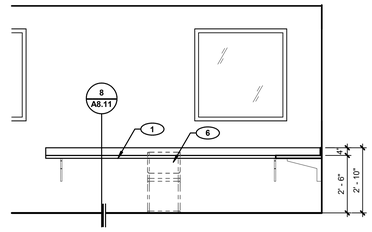

1A OFFICE 141 CASEWORK ELEVATION
SCALE: 3/8" = 1'-0"

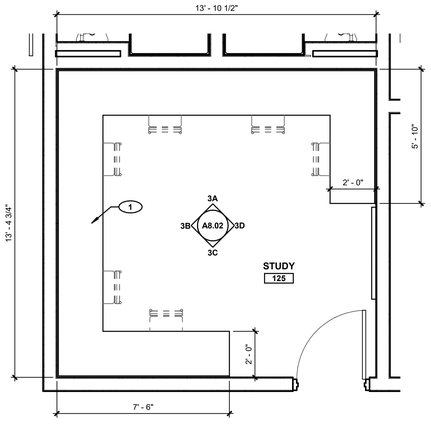

3 STUDY 125 CASEWORK PLAN
SCALE: 3/8" = 1'-0"

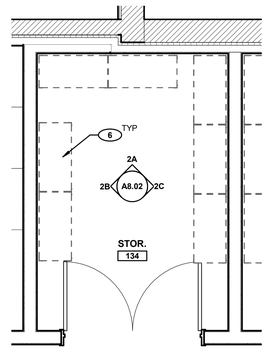

STORAGE 134 CASEWORK PLAN,
STORAGE 135 SIMILAR
2 SCALE: 3/8" = 1'-0"

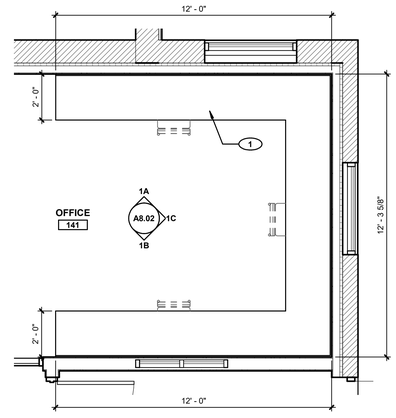

1 OFFICE 141 CASEWORK PLAN
SCALE: 3/8" = 1'-0"

GENERAL NOTES

1. ALL DIMENSIONS ARE TAKEN FROM FACE OF FINISH.
2. FOR CASEWORK FINISHES, REFER TO MATERIAL SCHEDULE ON SHEET A2.01.
3. WHERE BACKSPLASH OCCURS, PROVIDE SPLASH AT SIDE WALLS ADJACENT TO COUNTER.
4. FIELD VERIFY DIMENSIONS PRIOR TO MANUFACTURING ANY CASEWORK. VERIFY MINIMUM CUTOUT DIMENSION FOR ALL APPLIANCES WITH OWNER.
5. PROVIDE SUFFICIENT BLOCKING ON WALLS FOR ALL WALL MOUNTED CASEWORK.
6. ACC.: INDICATES LOCATIONS WHERE CASEWORK MUST BE CONSTRUCTED TO COMPLY WITH THE REQUIREMENTS FOR ACCESIBILITY. REFER TO GENERAL ACCESSIBILITY DETAILS.
7. ALL EQUIPMENT (O.F.O.I. AND C.F.C.I.) SHALL COMPLY WITH ACCESSIBILITY REQUIREMENTS.
8. COORDINATE WITH FOOD SERVICE AND MPE DRAWINGS FOR ALL PLUMBING FIXTURES AND POWER/DATA REQUIREMENTS.
9. FURNITURE SHOWN DASHED ARE FOR REFERENCE ONLY. REFER TO SHEET A1.41 FOR FURNITURE AND EQUIPMENT PLAN.

KEYNOTES

1. SOLID SURFACE COUNTERTOP WITH BACKSPLASH, (ML-1)
2. BASE CABINET, REFER TO CASEWORK SCHEDULE, (PL-1)
3. UPPER CABINET, REFER TO CASEWORK SCHEDULE, (PL-1)
4. SINK, REFER TO PLUMBING DRAWINGS
5. APPLIANCE, REFER TO FURNITURE AND EQUIPMENT PLAN
6. FURNITURE (SHOWN DASHED), REFER TO FURNITURE AND EQUIPMENT PLAN
7. TALL PANTRY CABINET, REFER TO CASEWORK SCHEDULE
8. 2-1/2" DIAMETER GROMMET FOR DATA / POWER, TYPICAL
9. STAINLESS STEEL COUNTERTOP WITH BACKSPLASH AND MARINE EDGE
10. 6" DIAMETER STAINLESS STEEL IN-COUNTER TRASH CHUTE
11. TRASH BIN (SHOWN DASHED) UNDERNEATH COUNTERTOP
12. STAINLESS STEEL ISLAND COUNTERTOP WITH MARINE EDGE
13. TV MONITOR, REFER TO FURNITURE AND EQUIPMENT PLAN
14. DRINKING FOUNTAIN WITH BOTTLE FILLER, REFER TO PLUMBING DRAWINGS
15. 4' x 4' MARKER BOARD, REFER TO FURNITURE AND EQUIPMENT PLAN

tsk

225 South Arlington Avenue,
Suite A
Reno NV, 89501
phone: 775.857.2949
fax: 775.857.2403
www.tska.com

THESE DRAWINGS AND SPECIFICATIONS ARE THE PROPERTY OF TATE SNYDER KIMSEY ARCHITECTS AND MAY NOT BE REPRODUCED OR USED FOR ANY PURPOSE WITHOUT THE ARCHITECTS WRITTEN CONSENT. AS INSTRUMENTS OF SERVICE, THESE DOCUMENTS ARE NOT FINAL AND READY FOR USE, AND THEREFORE NOT VALID, UNLESS THEY ARE SEALED, SIGNED AND DATED.

Copyright, Ltd 2024

Consultant

PLEASE RECYCLE

Project

SPARKS Fire Station #6

6963 SCHEIDBAR ROAD, SPARKS NEVADA 89436

Job No: 22-043

Owner

CITY OF SPARKS

BID SET

REVISIONS		
REV	DATE	DESCRIPTION

Sheet Title

CASEWORK PLAN AND ELEVATIONS

Date: JANUARY 4, 2024

Sheet No:

A8.02

CASEWORK SCHEDULE

CABINET NO.	SIZE W	SIZE H	SIZE D	DESCRIPTION
CW_Counter Top-U Shaped		30"	24"	
100M	72"	31"	24"	
101	24"	31"	24"	
152	36"	36"	24"	
152	42"	36"	30"	
154 B	36"	34"	24"	
155M	36"	36"	24"	
211	12"	34"	24"	
211	15"	36"	30"	
211	18"	36"	24"	
211	24"	34"	30"	
220	36"	36"	24"	
222	40"	34"	24"	
222	36"	34"	30"	
222	36"	36"	24"	
222	36"	36"	30"	
301	15"	30"	12"	
301	16"	22"	12"	
302	30"	30"	12"	
302	36"	22"	12"	
302	36"	30"	12"	
302	40"	22"	12"	
302	42"	22"	12"	
302	57"	30"	12"	
309	30"	30"	12"	
401	18"	84"	24"	
401	24"	84"	24"	
425M	32"	84"	20"	
Base Cabinet-Filler_36		34 1/2"	24"	
Upper Cabinet-Filler-Wall	4"	22"	12"	

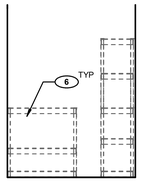

1C LINEN 126 CASEWORK ELEVATION
SCALE: 3/8" = 1'-0"

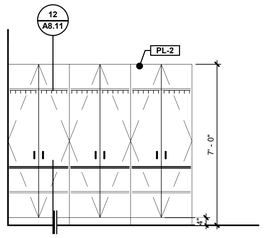

3B CREW 129 CASEWORK ELEVATION
SCALE: 3/8" = 1'-0"

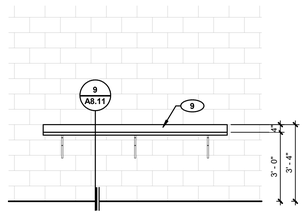

2B APPARATUS BAYS 142 CASEWORK ELEVATION
SCALE: 3/8" = 1'-0"

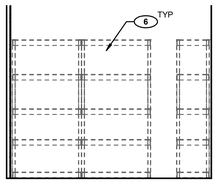

1B LINEN 126 CASEWORK ELEVATION
SCALE: 3/8" = 1'-0"

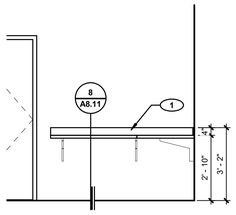

4A TURNOUT GEAR 150 CASEWORK ELEVATION
SCALE: 3/8" = 1'-0"

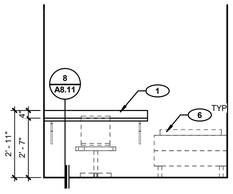

3A CREW 129 CASEWORK ELEVATION
SCALE: 3/8" = 1'-0"

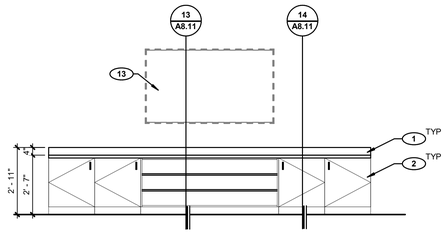

2A DAY ROOM 139 CASEWORK ELEVATION
SCALE: 3/8" = 1'-0"

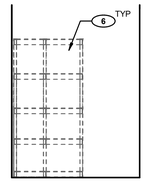

1A LINEN 126 CASEWORK ELEVATION
SCALE: 3/8" = 1'-0"

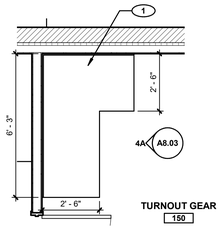

4 TURNOUT GEAR 150 CASEWORK PLAN
SCALE: 3/8" = 1'-0"

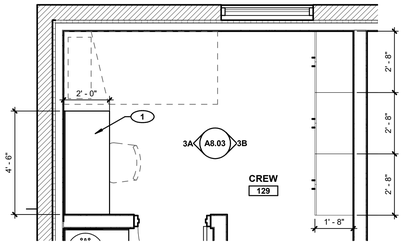

3 CREW 129 TYPICAL CASEWORK PLAN
SCALE: 3/8" = 1'-0"

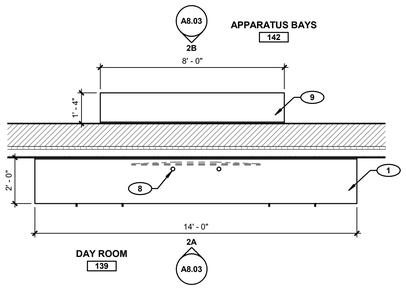

2 DAY ROOM 139 / APPARATUS BAYS CASEWORK PLAN
SCALE: 3/8" = 1'-0"

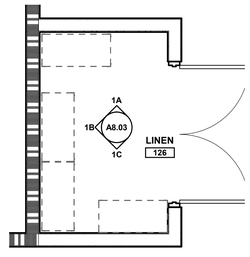

1 LINEN 126 CASEWORK PLAN
SCALE: 3/8" = 1'-0"

GENERAL NOTES

1. ALL DIMENSIONS ARE TAKEN FROM FACE OF FINISH.
2. FOR CASEWORK FINISHES, REFER TO MATERIAL SCHEDULE ON SHEET A2.01.
3. WHERE BACKSPLASH OCCURS, PROVIDE SPLASH AT SIDE WALLS ADJACENT TO COUNTER.
4. FIELD VERIFY DIMENSIONS PRIOR TO MANUFACTURING ANY CASEWORK. VERIFY MINIMUM CUTOUT DIMENSION FOR ALL APPLIANCES WITH OWNER.
5. PROVIDE SUFFICIENT BLOCKING ON WALLS FOR ALL WALL MOUNTED CASEWORK.
6. ACC.: INDICATES LOCATIONS WHERE CASEWORK MUST BE CONSTRUCTED TO COMPLY WITH THE REQUIREMENTS FOR ACCESIBILITY. REFER TO GENERAL ACCESSIBILITY DETAILS.
7. ALL EQUIPMENT (O.F.O.I. AND C.F.C.I.) SHALL COMPLY WITH ACCESSIBILITY REQUIREMENTS.
8. COORDINATE WITH FOOD SERVICE AND MPE DRAWINGS FOR ALL PLUMBING FIXTURES AND POWER/DATA REQUIREMENTS.
9. FURNITURE SHOWN DASHED ARE FOR REFERENCE ONLY. REFER TO SHEET A1.41 FOR FURNITURE AND EQUIPMENT PLAN.

KEYNOTES

1. SOLID SURFACE COUNTERTOP WITH BACKSPLASH, (ML-1)
2. BASE CABINET, REFER TO CASEWORK SCHEDULE, (PL-1)
3. UPPER CABINET, REFER TO CASEWORK SCHEDULE, (PL-1)
4. SINK, REFER TO PLUMBING DRAWINGS
5. APPLIANCE, REFER TO FURNITURE AND EQUIPMENT PLAN
6. FURNITURE (SHOWN DASHED), REFER TO FURNITURE AND EQUIPMENT PLAN
7. TALL PANTRY CABINET, REFER TO CASEWORK SCHEDULE
8. 2-1/2" DIAMETER GROMMET FOR DATA / POWER, TYPICAL
9. STAINLESS STEEL COUNTERTOP WITH BACKSPLASH AND MARINE EDGE
10. 6" DIAMETER STAINLESS STEEL IN-COUNTER TRASH CHUTE
11. TRASH BIN (SHOWN DASHED) UNDERNEATH COUNTERTOP
12. STAINLESS STEEL ISLAND COUNTERTOP WITH MARINE EDGE
13. TV MONITOR, REFER TO FURNITURE AND EQUIPMENT PLAN
14. DRINKING FOUNTAIN WITH BOTTLE FILLER, REFER TO PLUMBING DRAWINGS
15. 4' x 4' MARKER BOARD, REFER TO FURNITURE AND EQUIPMENT PLAN

tsk

225 South Arlington Avenue,
Suite A
Reno NV, 89501
phone: 775.857.2949
fax: 775.857.2403
www.tska.com

THESE DRAWINGS AND SPECIFICATIONS ARE THE PROPERTY OF TATE SNYDER KIMSEY ARCHITECTS AND MAY NOT BE REPRODUCED OR USED FOR ANY PURPOSE WITHOUT THE ARCHITECTS WRITTEN CONSENT. AS INSTRUMENTS OF SERVICE, THESE DOCUMENTS ARE NOT FINAL AND READY FOR USE, AND THEREFORE NOT VALID, UNLESS THEY ARE SEALED, SIGNED AND DATED.

Copyright, Ltd 2024

Consultant

PLEASE RECYCLE

Project

SPARKS Fire Station #6

6963 SCHEIDBAR ROAD, SPARKS NEVADA 89436

Job No: 22-043

Owner

CITY OF SPARKS

BID SET

REVISIONS

REV	DATE	DESCRIPTION

Sheet Title

CASEWORK PLAN AND ELEVATIONS

Date: JANUARY 4, 2024

Sheet No:

A8.03

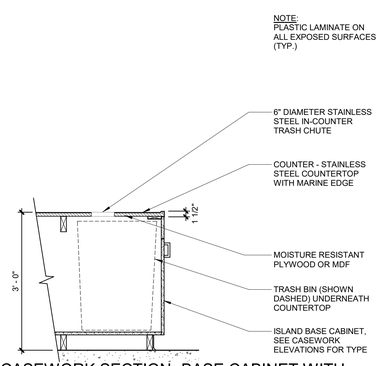

16 CASEWORK SECTION- BASE CABINET WITH TRASH BIN
SCALE: 3/4" = 1'-0"

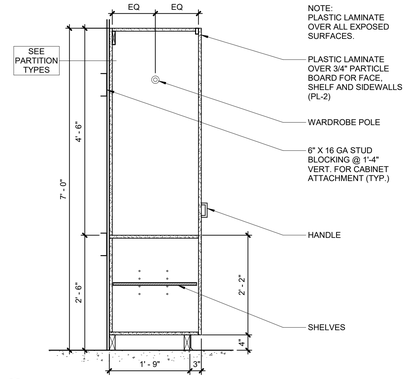

12 CASEWORK SECTION - DORM ROOM LOCKER
SCALE: 3/4" = 1'-0"

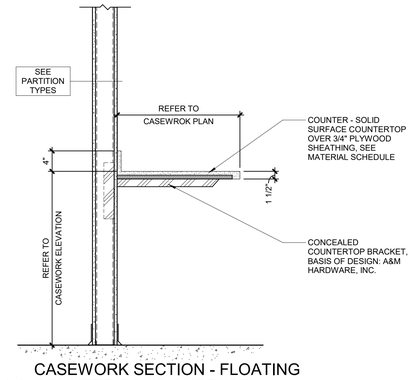

8 CASEWORK SECTION - FLOATING COUNTER(SOLID SURFACE)
SCALE: 1" = 1'-0"

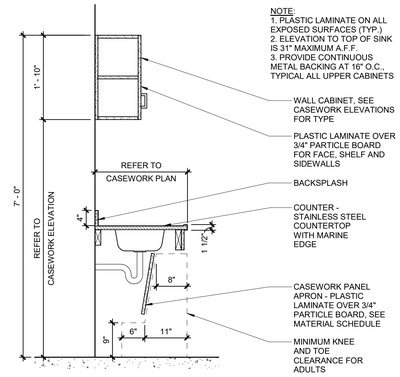

4 CASEWORK SECTION - SINK COUNTER
SCALE: 3/4" = 1'-0"

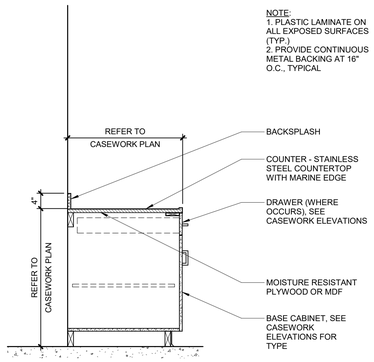

19 CASEWORK SECTION- BASE CABINET
SCALE: 3/4" = 1'-0"

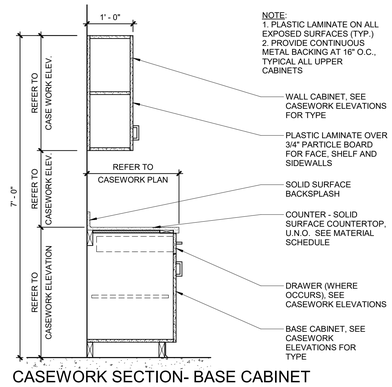

15 CASEWORK SECTION- BASE CABINET WITH UPPER CABINET
SCALE: 3/4" = 1'-0"

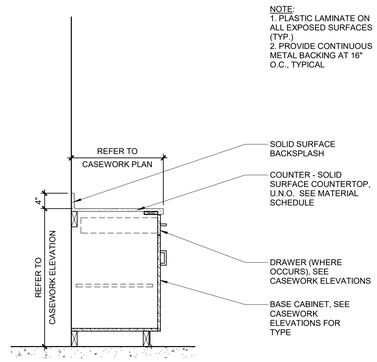

11 CASEWORK SECTION - BASE CABINET
SCALE: 3/4" = 1'-0"

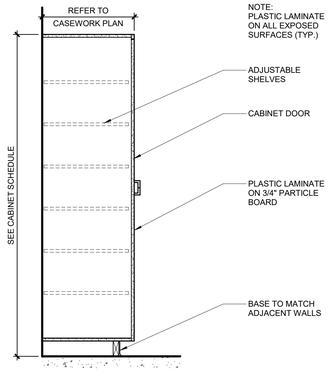

7 FULL HEIGHT CABINET
SCALE: 3/4" = 1'-0"

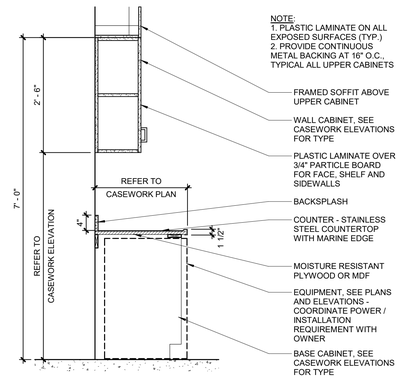

3 CASEWORK SECTION - DISHWASHER
SCALE: 3/4" = 1'-0"

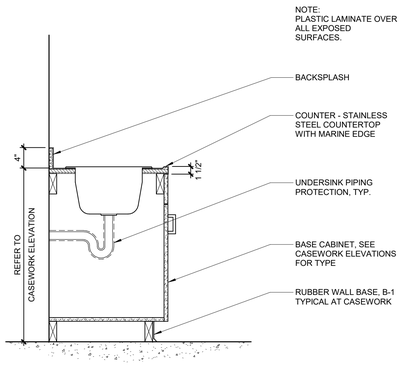

18 CASEWORK SECTION - DEEP SINK
SCALE: 1" = 1'-0"

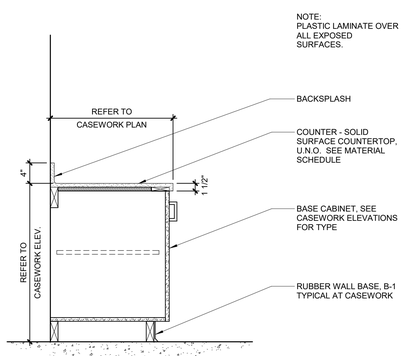

14 CASEWORK SECTION -BASE CABINET WITHOUT DRAWERS
SCALE: 1" = 1'-0"

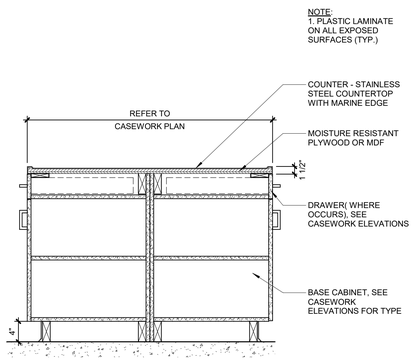

10 CASEWORK SECTION- BASE CABINET
SCALE: 1" = 1'-0"

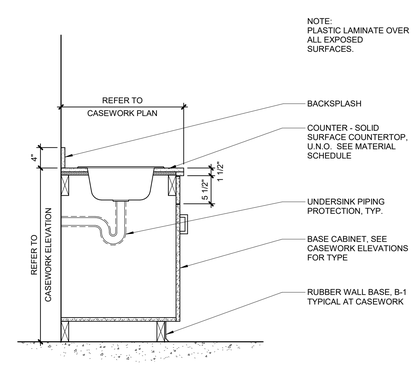

6 CASEWORK SECTION - STANDARD SINK
SCALE: 1" = 1'-0"

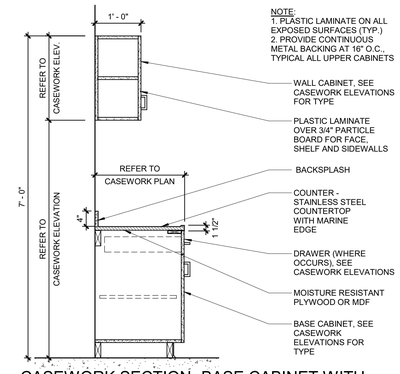

2 CASEWORK SECTION- BASE CABINET WITH UPPER CABINET
SCALE: 3/4" = 1'-0"

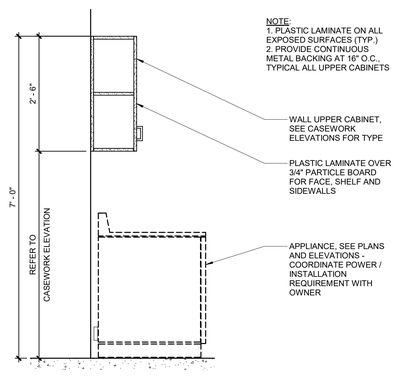

17 CASEWORK SECTION - DISHWASHER
SCALE: 3/4" = 1'-0"

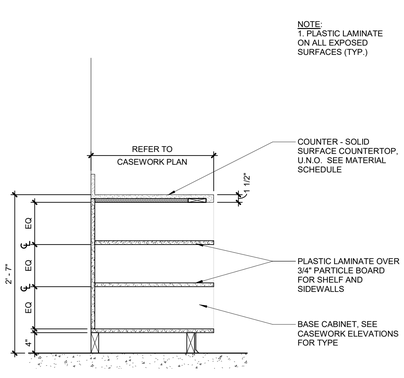

13 CASEWORK SECTION - OPEN BASE CABINET
SCALE: 1" = 1'-0"

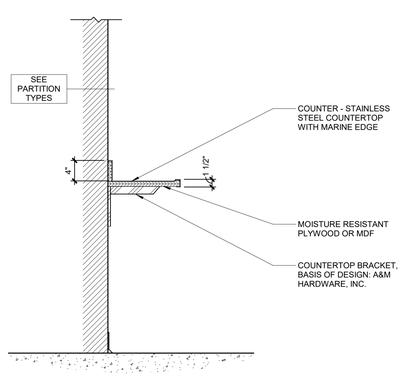

9 CASEWORK SECTION - FLOATING COUNTER
SCALE: 1" = 1'-0"

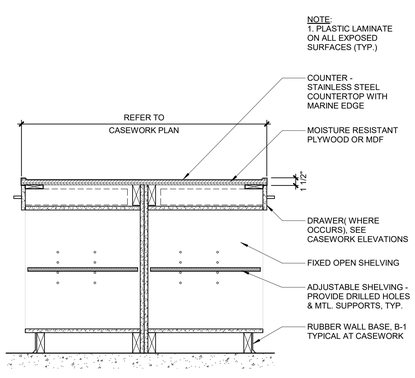

5 CASEWORK SECTION- OPEN SHELF
SCALE: 1" = 1'-0"

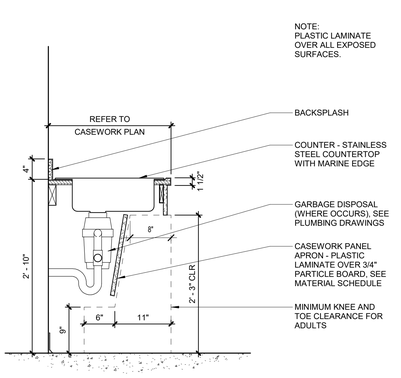

1 CASEWORK SECTION - KITCHEN SINK
SCALE: 1" = 1'-0"

tsk
225 South Arlington Avenue,
Suite A
Reno NV, 89501
phone: 775.857.2949
fax: 775.857.2403
www.tska.com

NOLBY M HARPSTEAD REGISTERED No. 8775 01/04/2024 ARCHITECT STATE OF NEVADA

THESE DRAWINGS AND SPECIFICATIONS ARE THE PROPERTY OF TATE SNYDER KIMSEY ARCHITECTS AND MAY NOT BE REPRODUCED OR USED FOR ANY PURPOSE WITHOUT THE ARCHITECTS WRITTEN CONSENT. AS INSTRUMENTS OF SERVICE, THESE DOCUMENTS ARE NOT FINAL AND READY FOR USE, AND THEREFORE NOT VALID, UNLESS THEY ARE SEALED, SIGNED AND DATED.

Copyright, Ltd 2024

Consultant

PLEASE RECYCLE

Project
SPARKS Fire Station #6

6963 SCHEIDBAR ROAD, SPARKS NEVADA 89436

Job No: 22-043

Owner
CITY OF SPARKS

CITY OF SPARKS FIRE DEPARTMENT Est. 1905

BID SET

REVISIONS		
REV	DATE	DESCRIPTION
A	05.18.23	Review Comments

Sheet Title
CASEWORK SECTIONS AND DETAILS

Date: JANUARY 4, 2024
Sheet No:
A8.11

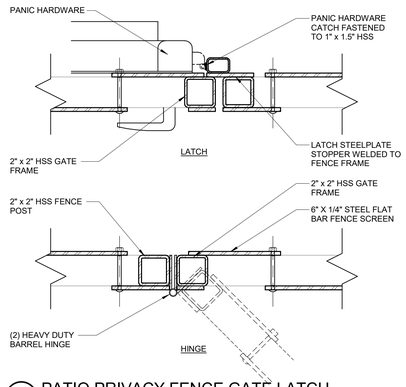

16 PATIO PRIVACY FENCE GATE LATCH
SCALE: 3" = 1'-0"

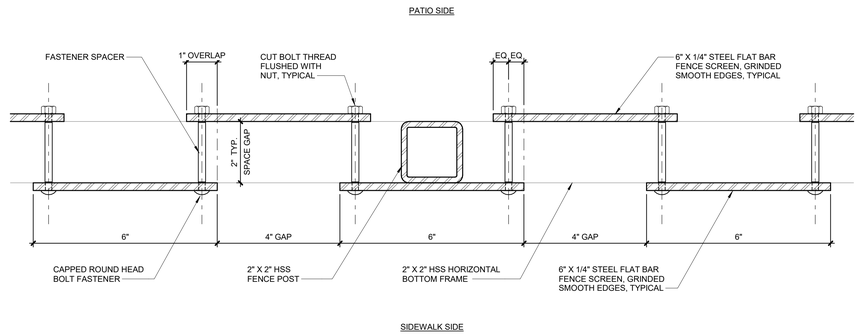

12 PATIO PRIVACY FENCE MID-CONNECTION & SPACING
SCALE: 6" = 1'-0"

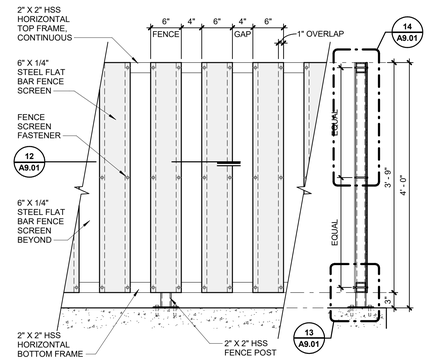

4 PATIO PRIVACY FENCE DETAIL
SCALE: 1" = 1'-0"

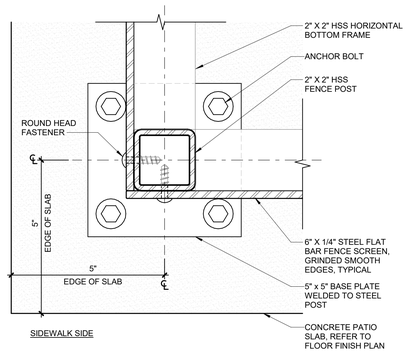

15 PATIO PRIVACY FENCE CORNER DETAIL
SCALE: 6" = 1'-0"

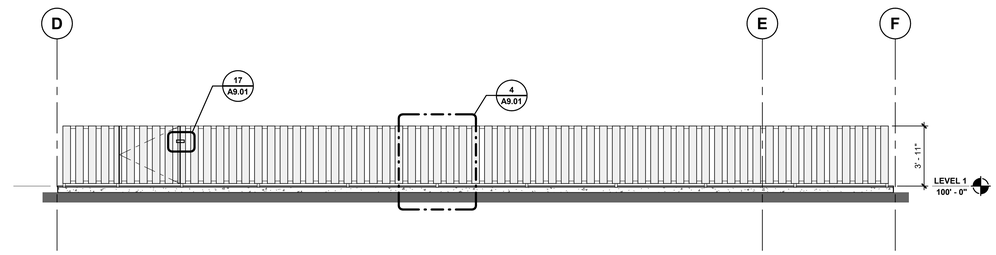

B PRIVACY FENCE ELEVATION
SCALE: 1/4" = 1'-0"

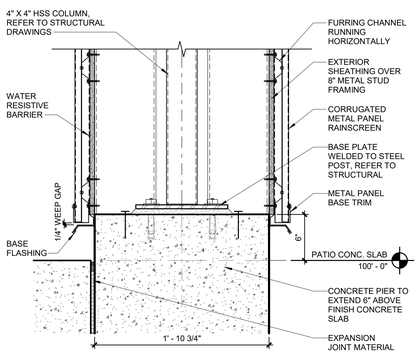

18 PATIO WALL BASE
SCALE: 1 1/2" = 1'-0"

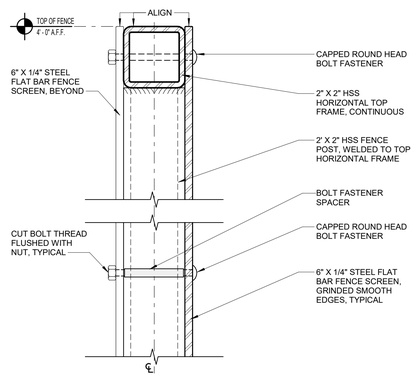

14 PATIO PRIVACY FENCE TOP DETAIL
SCALE: 6" = 1'-0"

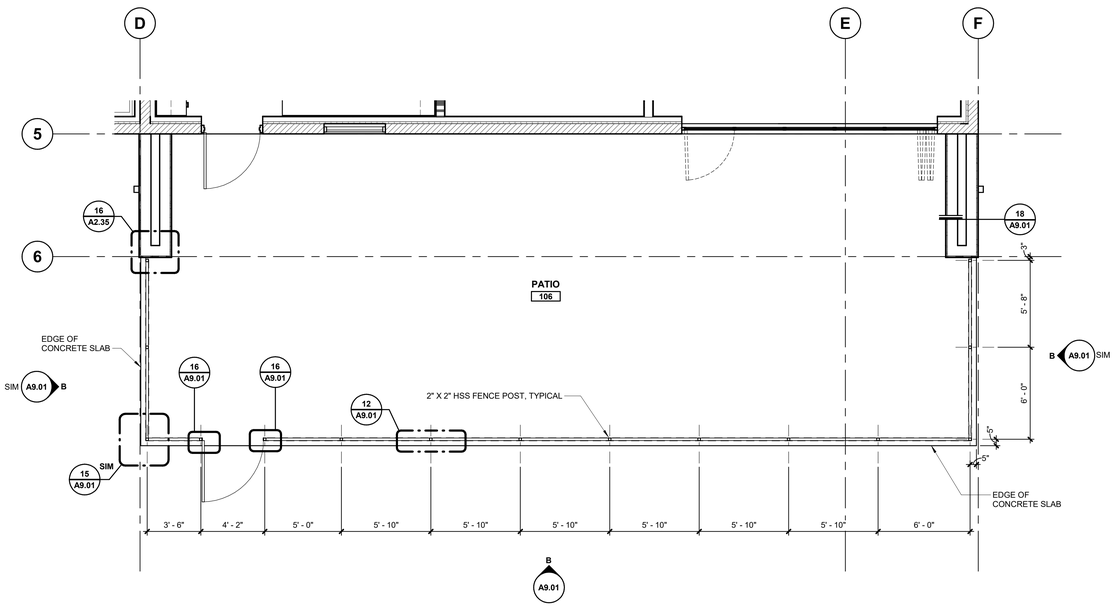

A ENLARGED PLAN - PATIO 106
SCALE: 1/4" = 1'-0"

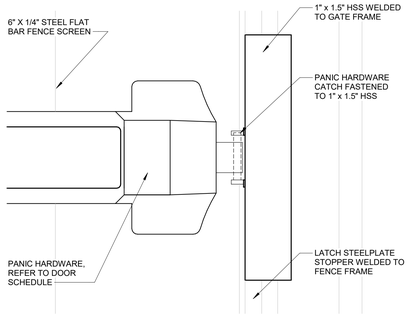

17 PATIO PRIVACY FENCE GATE LATCH ELEVATION
SCALE: 6" = 1'-0"

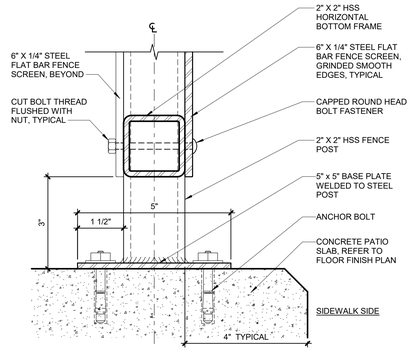

13 PATIO PRIVACY FENCE BASE DETAIL
SCALE: 6" = 1'-0"

tsk
225 South Arlington Avenue,
Suite A
Reno NV, 89501
phone: 775.857.2949
fax: 775.857.2403
www.tska.com

KOLBY M HARPSTEAD REGISTERED No. 8775 01/04/2024 ARCHITECT STATE OF NEVADA

THESE DRAWINGS AND SPECIFICATIONS ARE THE PROPERTY OF TATE SNYDER KIMSEY ARCHITECTS AND MAY NOT BE REPRODUCED OR USED FOR ANY PURPOSE WITHOUT THE ARCHITECTS WRITTEN CONSENT. AS INSTRUMENTS OF SERVICE, THESE DOCUMENTS ARE NOT FINAL AND READY FOR USE, AND THEREFORE NOT VALID, UNLESS THEY ARE SEALED, SIGNED AND DATED.
Copyright, Ltd 2024

Consultant

PLEASE RECYCLE

Project
SPARKS Fire Station #6

6963 SCHEIDBAR ROAD, SPARKS NEVADA 89436

Job No: 22-043

Owner
CITY OF SPARKS

BID SET

REVISIONS		
REV	DATE	DESCRIPTION

Sheet Title
MISCELLANEOUS DETAILS

Date: JANUARY 4, 2024
Sheet No:
A9.01

ABBREVIATIONS	
AB	ANCHOR BOLT
ABV	ABOVE
ADJ	ADJACENT
AFF	ABOVE FINISHED FLOOR
AFG	ABOVE FINISHED GRADE
AGGR	AGGREGATE
ALT	ALTERNATE
APPROX	APPROXIMATELY
ARCH'L	ARCHITECTURAL
BD	BOARD
BFG	BELOW FINISHED GRADE
BLDG	BUILDING
BLK'G	BLOCKING
BLW	BELOW
BM	BEAM
BN	BOUNDARY NAIL
BO, B.O.	BOTTOM OF
BOTT	BOTTOM
BRG	BEARING
BTWN	BETWEEN
CAM	CAMBER
CANT'L	CANTILEVER
CTR	CENTER
C , CL	CENTERLINE
CLR	CLEAR
CMU	CONC MASONRY UNIT
CFS	COLD-FORMED STEEL
COL	COLUMN
CONC	CONCRETE
CONN	CONNECTION
CONST	CONSTRUCTION
CONT	CONTINUOUS
d	PENNY
D, DIA	DIAMETER
DBL	DOUBLE
DFL	DOUGLAS FIR LARCH
DIAG	DIAGONAL
DTL	DETAIL
DIM	DIMENSION
DN	DOWN
DWG	DRAWING
DWL	DOWEL
EA	EACH
EF	EACH FACE
EJ	EXPANSION JOINT
ELEV	ELEVATION
ELEC	ELECTRICAL
EN	EDGE NAILING
ENCL	ENCLOSE
EOD	EDGE OF DECK
EOR	ENGINEER OF RECORD
EPS	EXPANDED POLYSTYREN
EQ	EQUAL
EQUIP	EQUIPMENT
EW	EACH WAY
EXIST, (E)	EXISTING
EXP	EXPANSION
EXT	EXTERIOR
EXT'D	EXTENDED
FND, FDN	FOUNDATION
FF	FINISH FLOOR
FG	FINISH GRADE
FIN	FINISH
FLR	FLOOR
FRMG	FRAMING
FS	FAR SIDE
FT	FEET OR FOOT
FTG	FOOTING
FURR	FURRING
GA	GAUGE
GN	GENERAL NOTES
GLB	GLUE LAMINATED BEAM
GRND	GROUND
GT	GIRDER TRUSS
GYP	GYPSUM WALLBOARD
HDG	HOT DIP GALVANIZED
HDR	HEADER
HGR	HANGER
HGT	HEIGHT
HORIZ	HORIZONTAL
HT	HIP TRUSS
INSUL	INSULATION
INT	INTERIOR
JT	JOINT
KS	KING STUD
LAM	LAMINATE
LAT	LATERAL
LBS, #	POUNDS
LLV	LONG LEG VERTICAL
LSL	LAM STRAND LUMBER
LT	LIGHT
LVL	LAM VENEER LUMBER
MAS	MASONRY
MAX	MAXIMUM
MECH	MECHANICAL
MFR	MANUFACTURER
MFR'D	MANUFACTURED
MIN	MINIMUM
MISC	MISCELLANEOUS
(N)	NEW
N	COMMON NAIL
NO	NUMBER
NS	NEAR SIDE
NTS	NOT TO SCALE
o/	OVER
OC	ON CENTER
OH	OPPOSITE HAND
OPN'G	OPENING
OWJ	OPEN WEB JOIST
PFA	POST FROM ABOVE
PSL	PARALLEL STRAND LUMBER
P , PL	PLATE
PLYWD	PLYWOOD
PNL	PANEL
PSI	POUNDS PER SQUARE INCH
PT	POST-TENSIONED
PREFAB	PREFABRICATED
r, RAD	RADIUS
REF	REFERENCE
REINF	REINFORCING
REQ'D	REQUIRED
S	SINKER NAIL
SCHED	SCHEDULE
SF	SQUARE FEET
SECT	SECTION
SEIS	SEISMIC
SHTH'G	SHEATHING
SIM	SIMILAR
SPEC	SPECIFICATIONS
SQ	SQUARE
STD	STANDARD
STG'D	STAGGERED
STL	STEEL
STRUCT	STRUCTURAL
SYM	SYMMETRICAL
SWL	SHEAR WALL
T&G	TONGUE AND GROOVE
T&B	TOP AND BOTTOM
THK	THICK
TO, T.O.	TOP OF
TRIM	TRIMMER
TR	TRUSS
TS	TUBE STEEL
TYP	TYPICAL
UNO	UNLESS NOTED OTHERWISE
VERT	VERTICAL
w/	WITH
W/O	WITHOUT
WP	WORKING POINT
WS	WOOD SCREW
WT	WEIGHT

A. GENERAL

1. ALL WORK SHALL CONFORM TO THE MINIMUM STANDARDS OF THE FOLLOWING CODE: THE INTERNATIONAL BUILDING CODE, 2018 EDITION, OTHER REGULATING AGENCIES WHICH HAVE AUTHORITY OVER ANY PORTION OF THE WORK, AND THOSE CODES AND STANDARDS LISTED IN THESE NOTES AND SPECIFICATIONS.
2. THE STRUCTURAL DRAWINGS AND SPECIFICATIONS REPRESENT THE FINISHED STRUCTURE. THEY DO NOT INDICATE THE METHOD OF CONTRUCTION. THE CONTRACTOR SHALL PROVIDE ALL MEASURES NECESSARY TO PROTECT THE STRUCTURE DURING CONSTRUCTION. SUCH MEASURES SHALL INCLUDE, BUT NOT BE LIMITED TO, BRACING, SHORING FOR LOADS DUE TO CONSTRUCTION EQUIPMENT, ETC. OBSERVATION VISITS TO THE SITE BY THE STRUCTURAL ENGINEER SHALL NOT INCLUDE INSPECTIONS OF THE ABOVE ITEMS.
3. THE CONTRACTOR SHALL VERIFY ALL DIMENSIONS PRIOR TO STARTING CONSTRUCTION. THE ARCHITECT SHALL BE NOTIFIED OF ANY DISCREPANCIES OR INCONSISTENCIES.
4. DIMENSIONS SHALL TAKE PRECEDENCE OVER THE SCALE SHOWN ON DRAWINGS.
5. NOTES AND DETAILS ON PLANS SHALL TAKE PRECEDENCE OVER GENERAL NOTES AND TYPICAL DETAILS.
6. SEE ARCHITECTURAL PLANS FOR THE FOLLOWING:
   A. SIZE AND LOCATION OF ALL DOOR AND WINDOWN OPENINGS, EXCEPT AS NOTED.
   B. SIZE AND LOCATION OF ALL INTERIOR AND EXTERIOR NON-BEARING PARTITIONS.
   C. SIZE AND LOCATION OF ALL CONCRETE CURBS, FLOOR DRAINS, SLOPES, DEPRESSED AREAS, CHANGES IN LEVEL, CHAMFER, GROOVES, INSERTS, ETC.
   D. SIZE AND LOCATION OF FLOOR AND ROOF OPENINGS, (EXCEPT AS SHOWN).
   E. FLOOR AND ROOF FINISHES.
   F. STAIR FRAMING AND DETAILS, (EXCEPT AS SHOWN).
   G. DIMENSIONS NOT SHOWN ON STRUCTURAL PLANS.
7. COORDINATE OR VERIFY WITH MECHANICAL PLANS, PLUMBING, AND ELECTRICAL PLANS FOR THE FOLLOWING:
   A. PIPE RUNS, SLEEVES, HANGERS, TRENCHES, WALL AND SLAB OPENINGS, ETC., (EXCEPT AS SHOWN OR NOTED).
   B. ELECTRICAL CONDUIT RUNS, BOXES, OUTLETS IN WALLS AND SLABS.
   C. CONCRETE INSERTS FOR ELECTRICAL, MECHANICAL, OR PLUMBING FIXTURES.
   D. SIZE AND LOCATION OF MACHINE EQUIPMENT BASES, OR ANCHOR BOLTS FOR MOUNTS.
   E. SIZE AND LOCATION OF ALL MECHANICAL UNITS.
8. OPENINGS, POCKETS, ETC. LARGER THAN 6 INCHES SHALL NOT BE PLACED IN SLABS, DECKS, BEAMS, JOISTS, COLUMNS, WALLS, ETC., UNLESS SPECIFICALLY DETAILED ON THE STRUCTURAL PLANS. CONTRACTOR TO SHOW ALL 6" OR GREATER OPENINGS ON STRUCTURAL MASONRY ELEVATION SHEETS TO SUBMIT TO ENGINEER FOR APPROVAL. CONTACT THE STRUCTURAL ENGINEER IF ANY STRUCTURAL ELEMENTS REQUIRE OPENINGS NOT SHOWN ON THESE PLANS AND ARE LARGER THAN 6" PRIOR TO MAKING MODIFICATIONS.
9. ASTM SPECIFICATIONS NOTED SHALL BE THE LATEST REVISION.
10. THE CONTRACTOR SHALL INVESTIGATE THE SITE DURING CLEARING AND EARTHWORK OPERATIONS FOR FILLED EXCAVATIONS OR BURIED STRUCTURES SUCH AS CESSPOOLS, CISTERNS, FOUNDATIONS, ETC. IF ANY SUCH STRUCTURES ARE FOUND, THE STRUCTURAL ENGINEER SHALL BE NOTIFIED IMMEDIATELY.
11. CONSTRUCTION MATERIALS SHALL BE SPREAD OUT IF PLACED ON FLOORS OR ROOF. LOAD SHALL NOT EXCEED THE DESIGN LIVE LOAD PER SQUARE FOOT. PROVIDE ADEQUATE SHORING AND/OR BRACING WHERE STRUCTURE HAS NOT ATTAINED DESIGN STRENGTH.
12. WHERE THE LONGEST HORIZONTAL CEILING DIMENSION IS EQUAL TO OR GREATER THAN 20'-0", IT IS RECOMMENDED THAT RESILIENT CHANNEL BE USED TO HELP LIMIT DRYWALL CRACKING.
13. THE FOLLOWING ITEMS ARE CONSIDERED TO BE DEFERRED SUBMITTALS PER SECTION 107.3.4.1 OF THE INTERNATIONAL BUILDING CODE, 2018 EDITION AND SHALL BE SUBMITTED TO THE REGISTERED DESIGN PROFESSIONAL IN RESPONSIBLE CHARGE FOR REVIEW, WHO SHALL REVIEW THEM AND FORWARD THEM TO THE BUILDING OFFICIAL WITH A NOTIFICATION INDICATING THAT THE DEFERRED SUBMITTAL DOCUMENTS HAVE BEEN REVIEWED AND FOUND TO BE IN GENERAL CONFORMANCE TO THE DESIGN OF THE BUILDING. THE DEFERRED SUBMITTAL ITEMS SHALL NOT BE INSTALLED UNTIL THE DEFERRED SUBMITTAL DOCUMENTS HAVE BEEN APPROVED BY THE BUILDING OFFICIAL.
   A. OPEN WEB STEEL JOISTS

B. DESIGN CRITERIA

GRAVITY LOAD	LIVE LOAD	DEAD LOAD
ROOF LOAD	20 PSF	20 PSF
ROOF SNOW LOAD	23 PSF	

* SEE FRAMING NOTES FOR SPECIAL LOADING CONDITIONS

WIND	
BASIC WIND SPEED	135 MPH
WIND RISK CATEGORY	IV
WIND EXPOSURE CATEGORY	C
INTERNAL PRESSURE COEFFICIENT	+/-0.18
COMPONENT & CLADDING	
ROOF	SEE ROOF UPLIFT DIAGRAMS
WALL	+38.4 PSF OR -41.8 PSF

* HIGHER LOADING USED AT CORNERS AND EDGES

SEISMIC	
SEISMIC RISK CATEGORY	IV
SEISMIC IMPORTANCE, I_E	1.5
MAPPED SPECTRAL RESPONSE ACCELERATIONS	S_S=1.358 & S_1=0.47
SPECTRAL RESPONSE COEFFICIENTS	S_{DS}=0.906 & S_{D1}=0.573
SITE CLASS	D
LATERAL FORCE RESISTING SYSTEM, NORTH/SOUTH	SPECIAL REINFORCED MASONRY SHEAR WALLS, R=5
LATERAL FORCE RESISTING SYSTEM, EAST/WEST	SPECIAL REINFORCED MASONRY SHEAR WALLS, R=5
SEISMIC RESPONSE COEFFICIENT, C_S	0.272
DESIGN BASE SHEAR	C_S x DEAD WEIGHT (W)
ANALYSIS PROCEDURE	EQUIVALENT LATERAL FORCE
SEISMIC DESIGN CATEGORY	D

C. FOUNDATION

1. THE FOUNDATION DEPICTED HEREIN HAS BEEN DESIGNED IN ACCORDANCE WITH RECOGNIZED ENGINEERING PRACTICE FOR SOIL CONDITIONS AS CLASSIFIED BY THE PROJECT GEOTECHNICAL REPORT, (THE GEOTECHNICAL REPORT);
   - CONSULTANT: WOOD RODGERS
   - REPORT NUMBER: 8523020
   - DATED: MARCH 2023
2. FOOTINGS ARE DESIGNED BASED ON AN ALLOWABLE SOIL PRESSURE OF 3000 PSF PER THE GEOTECHNICAL REPORT. ALLOWABLE SOIL PRESSURE FOR TOTAL LOADS INCLUDING WIND OR SEISMIC TO BE 4000 PSF. FRICTION COEFFICIENT = 0.45. ACTIVE AND PASSIVE EQUIVALENT FLUID PRESSURES = 35 AND 425 PCF, RESPECTIVELY.
3. SITE PREPARATION SHALL CONFORM TO THE REQUIREMENTS IN THE GEOTECHNICAL REPORT.
4. SOILS PREPARATION AND FOUNDATION CONSTRUCTION SHALL CONFORM TO THE REQUIREMENTS OF THE GEOTECHNICAL REPORT. IF CLAY SOILS ARE ENCOUNTERED THEY SHALL BE COMPLETELY REMOVED AND REPLACED WITH APPROVED, COMPACTED STRUCTURAL FILL. THE EARTHWORK CONTRACTOR IS RESPONSIBLE FOR OBTAINING APPROVAL FOR EACH PREPARED SURFACE PRIOR TO PROCEEDING WITH PLACEMENT OF ANY NEW FILL AND FOR MAINTAINING THE RECOMMENDED MOISTURE CONTENT DURING CONSTRUCTION. STRUCTURAL FILL SHALL BE PER THE GEOTECHNICAL REPORT.
5. SEE ARCHITECTURAL AND STRUCTURAL DRAWINGS FOR EXACT LOCATION OF BULKHEADS AND OPENINGS, ETC. ARCHITECTURAL AND STRUCTURAL DRAWINGS FOR EXACT LOCATION OF BULKHEADS AND OPENINGS, ETC.
6. THE CONTRACTOR SHALL PROVIDE FOR PROPER DE-WATERING OF EXCAVATIONS FROM SURFACE WATER, GROUND WATER, SEEPAGE, ETC. (FOOTINGS SHALL NOT BE PLACED UNDER WATER).
7. FOOTINGS SHALL BE PLACED ACCORDING TO DEPTHS SHOWN ON THE STRUCTURAL PLANS. ALL ABANDONED FOOTINGS, UTILITIES, ETC. THAT INTERFERE WITH NEW CONSTRUCTION SHALL BE REMOVED.
8. CONCRETE PLACEMENT SHALL BE IN ONE CONTINUOUS OPERATION UNLESS OTHERWISE SPECIFIED AND SLAB SURFACE SHALL BE CURED WITH HUNTS COMPOUND OR EQUAL.
9. FOOTING BACKFILL AND UTILITY TRENCH BACKFILL WITHIN BUILDING AREA SHALL BE PER THE REQUIREMENTS OF THE GEOTECHNICAL REPORT. FLOODING WILL NOT BE PERMITTED.
10. STOOPS, PORCHES, OR OTHER ATTACHMENT SHALL BE CAST INDEPENDENT OF THE CONCRETE FOUNDATION SLAB, UNO. PROVIDE CONSTRUCTION JOINTS WHERE SHOWN ON THE DRAWINGS.

D. CONCRETE

1. ALL PHASES OF WORK PERTAINING TO THE CONCRETE CONSTRUCTION SHALL CONFORM TO THE "BUILDING CODE REQUIREMENTS FOR REINFORCED CONCRETE" (ACI 318-14), WITH MODIFICATIONS AS NOTED IN THE DRAWINGS AND SPECIFICATIONS.
2. REINFORCED CONCRETE DESIGN IS BY THE "ULTIMATE STRENGTH DESIGN METHOD", ACI 318-14. SCHEDULE OF STRUCTURAL CONCRETE 28-DAY COMPRESSIVE STRENGTH AND TYPES:

LOCATION IN STRUCTURE	STRENGTH	AGGREGATE	ENTRAINED AIR %
SLAB ON GRADE	3500 PSI	3/4" STONE	NONE
FOOTINGS*	3500 PSI	3/4" STONE	5% +/- 1 1/2%
FOUNDATION WALLS	4500 PSI	3/4" STONE	6% +/- 1 1/2%
EXTERIOR CONCRETE**	4500 PSI	3/4" STONE*	6% +/- 1 1/2%

* FOUNDATION WALLS CONCRETE MIXTURE CAN BE USED FOR FOOTINGS AT CONTRACTOR'S OPTION
**INCLUDE 1.5 LB/CY OF FIBERMESH 150 POLYPROPYLENE FIBERS OR APPROVED EQUAL.

4. A MINIMUM OF THREE (3) CYLINDERS FOR EVERY 100 YARDS OF CONCRETE SHALL BE TAKEN TO DETERMINE CONCRETE STRENGTH.
5. CONCRETE MIX DESIGN SHALL BE SUBMITTED TO THE STRUCTURAL ENGINEER FOR APPROVAL WITH THE FOLLOWING REQUIREMENTS:
   A. COMPRESSIVE STRENGTH AT AGE 28 DAYS AS SPECIFIED ABOVE.
   B. AGGREGATE SUBMITTAL: 3/4" MAXIMUM SIZE CONFORMING TO ASTM C-33.
   C. CEMENT: ASTM C-150, TYPE II PORTLAND CEMENT.
   D. MAXIMUM SLUMP: 3 INCHES, ADDITIONAL WORKABILITY MAY BE ACHIEVED WITH AN APPROVED ADMIXTURE THAT DOES NOT PROMOTE SHRINKAGE OF THE CONCRETE.
   E. NO ADDITIONAL ADMIXTURES, EXCEPT FOR ENTRAINED AIR, OR AS SPECIFIED OR APPROVED BY THE STRUCTURAL ENGINEER.
   F. MAXIMUM WATER/CEMENT RATIO SHALL BE 0.45, U.N.O.
      a. FOR SLAB ON GRADE, MAXIMUM WATER/CEMENT RATIO SHALL BE 0.50.
   G. CONCRETE SHALL BE 142 +/- 7 LBS/CU. FT.
6. CONCRETE MIXING OPERATIONS, ETC, SHALL CONFORM TO ASTM C-94.
7. PLACEMENT OF CONCRETE SHALL CONFORM TO ACI STANDARD 614.
8. CLEAR COVERAGE OF CONCRETE OVER OUTER REINFORCING BARS SHALL BE AS FOLLOWS, UNO:
   A. CONCRETE POURED DIRECTLY AGAINST EARTH: 3 INCHES CLEAR
   B. STRUCTURAL SLABS: 3/4 INCHES CLEAR (TOP AND BOTTOM)
   C. FORMED CONCRETE WITH EARTH BACKFILL: 2 INCHES CLEAR
9. ALL REINFORCING BARS, HOLD DOWN BOLTS AND STRAPS, AND OTHER CONCRETE INSERTS SHALL BE WELL SECURED IN POSITION PRIOR TO PLACING CONCRETE.
10. PROVIDE SLEEVES FOR PLUMBING AND ELECTRICAL OPENINGS IN CONCRETE BEFORE PLACING. DO NOT CUT ANY REINFORCING WHICH MAY CONFLICT. CORING IN CONCRETE IS NOT PERMITTED EXCEPT AS SHOWN. NOTIFY THE STRUCTURAL ENGINEER IN ADVANCE OF CONDITIONS NOT SHOWN ON THE DRAWINGS.
11. CONDUIT OR PIPE SIZE (O.D.) SHALL NOT EXCEED 30% OF SLAB THICKNESS AND SHALL BE PLACED UNDER CONCRETE, UNLESS SPECIFICALLY DETAILED OTHERWISE. CONCENTRATIONS OF CONDUITS OR PIPES SHALL BE AVOIDED EXCEPT WHERE DETAILED OPENINGS ARE PROVIDED.
12. MODULUS OF ELASTICITY OF CONCRETE, WHEN TESTED IN ACCORDANCE WITH ASTM C-460, SHALL BE AT LEAST THE VALUE GIVEN BY THE EQUATIONS IN SECTION 19.2.2.1 OF ACI 318 FOR THE SPECIFIED 28-DAY STRENGTH.
13. ALL CONCRETE SLABS SHALL USE VC-5 CURING COMPOUND MANUFACTURED BY SINAK, BLANKET CURED WITH MOISTURE-RETAINING SHEET, OR AN APPROVED EQUAL.
14. SPECIAL INSPECTOR TO VERIFY AND SIGN ALL BATCH TICKETS AND PRODUCE A POUR MAP INDICATING PLACEMENT OF EACH BATCH FOR SLAB ON GRADE AND SLAB ON METAL DECK PRIOR TO PLACEMENT.

E. REINFORCING STEEL

1. REINFORCING BARS SHALL CONFORM TO THE REQUIREMENTS OF ASTM A-615 GRADE 60.
2. WELDED REINFORCING BARS SHALL CONFORM TO THE REQUIREMENTS OF ASTM A-706 GRADE 60.
3. ALL REINFORCING BARS SHALL BE MADE COLD.
4. MINIMUM LAP OF THE WELDED WIRE FABRIC SHALL BE 6 INCHES OR ONE AND ONE HALF SQUARES WHICHEVER IS GREATER.
5. ALL BARS SHALL BE MARKED SO THEIR IDENTIFICATION CAN BE MADE WHEN THE FINAL IN-PLACE INSPECTION IS MADE.
6. REBAR SPLICES ARE TO BE CLASS "B" (UNO). MAINTAIN 2 BAR DIA CLEAR SPACE BETWEEN ADJACENT SPLICES

REBAR SIZE	#3	#4	#5	#6	#7	#8	#9	#10
MINIMUM LAP LENGTH, INCHES, CONCRETE	22	29	36	43	68	78	88	98
MINIMUM LAP LENGTH, INCHES, MASONRY	13	22	35	64	87	131	NA	NA
STD. HOOK LENGTH, INCHES	4 1/2	6	7 1/2	9	10 1/2	12	13 1/2	15 1/2

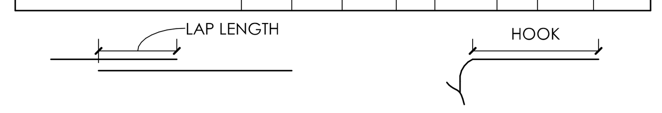

7. REINFORCING SPLICES SHALL BE MADE ONLY WHERE INDICATED ON THE DRAWINGS.
8. DOWELS BETWEEN FOOTINGS AND WALLS OR COLUMNS SHALL BE THE SAME GRADE, SIZE AND SPACING OR NUMBER AS THE VERTICAL REINFORCING, RESPECTIVELY.

F. CONCRETE MASONRY (CONCRETE BLOCK)

1. MASONRY UNITS SHALL BE MEDIUM WEIGHT UNITS, 2000 PSI, CONFORMING TO THE LATEST ASTM DESIGNATION C-90 AND THE QUALITY CONTROL STANDARDS OF THE CONCRETE MASONRY ASSOCIATION OF CALIFORNIA AND NEVADA.
2. DESIGN STRENGTH SHALL BE F'm = 2000 PSI.
3. MASONRY UNITS SHALL BE CONSTRUCTED USING TYPE II CEMENT.
4. PORTLAND CEMENT SHALL CONFORM TO ASTM DESIGNATION C-150 AND BE AS SPECIFIED FOR CONCRETE.
5. MORTAR SHALL CONFORM TO THE REQUIREMENTS OF TMS-602 TABLE SC-1, TYPE M OR S.
6. GROUT SHALL CONFORM TO REQUIREMENTS OF ASTM C476 FOR COARSE GROUT. USE SUFFICIENT WATER FOR GROUT TO FLOW INTO ALL VOIDS OF THE MASONRY WITHOUT SEGREGATION. GROUT SHALL ATTAIN A MINIMUM COMPRESSIVE STRENGTH OF 2000 PSI AT 28 DAYS AND NOT LESS THAN SPECIFIED MASONRY STRENGTH F'm PER ITEM 1 (ONE) ABOVE.
7. PROVIDE A MINIMUM OF 1/2" GROUT BETWEEN MAIN REINFORCING AND MASONRY UNITS. MORTAR FIN PROJECTIONS LARGER THAN 1/4" FROM INTERIOR FACE OF CMU BLOCK TO BE KNOCKED OFF PRIOR TO GROUTING.
8. LOW LIFT CONSTRUCTION, MAXIMUM GROUT POUR HEIGHT IS 5'-4" U.N.O.
9. CELLS SHALL BE IN VERTICAL ALIGNMENT. DOWELS IN FOOTINGS SHALL BE SET TO ALIGN WITH CORES CONTAINING REINFORCING STEEL.
10. REFER TO ARCHITECTURAL DRAWINGS FOR SURFACE AND HEIGHT OF UNITS, LAYING PATTERN AND JOINT TYPE.
11. PROVIDE LEVEL 2 SPECIAL INSPECTION IN ACCORDANCE WITH TMS 402-16 SECTION 3.1.2ze.
12. MASONRY LAP SPLICES SHALL BE A MINIMUM OF 48 BAR DIAMETERS OR THE VALUE SHOWN IN SECTION D, WHICHEVER IS LARGER.
13. ONE SET OF THREE MASONRY PRISMS TO BE BUILT AND TESTED PER ASTM C131, STANDARD TEST METHOD FOR COMPRESSIVE STRENGTH OF MASONRY PRISMS, FOR EACH VARIETY OF MASONRY BLOCK (8816,12816, SHOT BLAST, PRECISION, ETC) PRIOR TO CONSTRUCTION.

G. STRUCTURAL STEEL

1. HOT-ROLLED STRUCTURAL STEEL SHAPES SHALL BE PER ASTM A992, EXCEPT ANGLES AND CHANNELS SHALL BE PER ASTM A36, UNO.
2. STRUCTURAL PIPE SHALL BE PER ASTM A53 GRADE B, UNO.
3. STRUCTURAL HSS SHAPES SHALL BE PER ASTM A500 GRADE C, UNO.
4. STRUCTURAL PLATE STEEL SHALL BE PER ASTM A36, UNO.
5. NUTS AND BOLTS IN STRUCTURAL STEEL CONNECTIONS SHALL BE PER ASTM F1852 (DESIGNATED AS A325N OR HIGH STRENGTH BOLT ON THE DRAWINGS), WITH HARDENED WASHERS UNO. DESIGN IS BASED UPON BEARING TYPE CONNECTIONS WITH THREADS NOT EXCLUDED. PERIODIC SPECIAL INSPECTION REQUIRED, UNO. CONTACT FACES OF STEEL AT CONNECTIONS WHERE HIGH-STRENGTH BOLTS ARE USED SHALL NOT BE PAINTED. HIGH STRENGTH BOLTS SHALL BE TENSION CONTROL TO ENSURE PROPER INSTALLATION, UNO.
6. ANCHOR BOLTS SHALL BE PER ASTM F1554 GR. 36, UNO.
7. HEADED STUDS SHALL BE NELSON STUD ANCHORS (NSA) BY TRW OR APPROVED EQUAL, UNO, AND SHALL BE INSTALLED PER MANUFACTURER'S REQUIREMENTS.
8. WELDS SHALL BE BY E70XX, LOW HYDROGEN ELECTRODES. ALL WELDING SHALL CONFORM TO THE AMERICAN WELDING SOCIETY'S SPECIFICATIONS FOR THE MATERIAL BEING WELDED AND ALL WELDING TO BE PERFORMED BY ONLY AWS CERTIFIED WELDERS.
9. WELDS DESIGNATED AS DEMAND CRITICAL SHALL BE MADE WITH FILLER METALS MEETING THE REQUIREMENTS OF AWS D1.8/D1.8M CLAUSES 6.1, 6.2, AND 6.3. FILLER METAL FOR DEMAND CRITICAL WELDS SHALL HAVE A MINIMUM CHARPY V-NOTCH (CVN) TOUGHNESS OF 40 FT-LBS AT 70° F OR LOWER.
10. ALL FIELD WELDS SHALL HAVE SPECIAL INSPECTION.
11. PROVIDE SPECIAL INSPECTION IN ACCORDANCE WITH IBC 1705.2.1.
12. ALL STRUCTURAL STEEL WORK SHALL BE SHOP PAINTED AND TOUCHED UP IN THE FIELD AFTER ERECTION EXCEPT WHERE STEEL IS TO BE EMBEDDED IN CONCRETE, FIREPROOFED, OR WHERE REQUIRED FOR SPECIAL CONNECTIONS. PROVIDE 3" MINIMUM CONCRETE COVER FOR ALL STEEL EXPOSED TO EARTH.

H. METAL DECKING

1. METAL DECK SHALL CONFORM TO THE REQUIREMENTS OF THE STEEL DECK INSTITUTE.
2. TYPE AND GAUGE OF METAL DECK SHALL BE PER THE FRAMING PLANS AND NOTES. METAL DECK FINISH PER ARCHITECTURAL DRAWINGS.
3. DECKING SHALL BE ATTACHED TO STEEL SUPPORTS AND HAVE SIDE LAP ATTACHMENTS AS SHOWN ON THESE DRAWINGS.
4. DECK WELDING SHALL BE DONE IN ACCORDANCE WITH THE AMERICAN WELDING SOCIETY'S SPECIFICATIONS AND SHALL BE PERFORMED BY WELDERS EXPERIENCED IN METAL DECK WELDING.
5. DECKING SHALL BEAR NO LESS THAN 2" ON STEEL SUPPORTS AND SHALL SPAN CONTINUOUSLY OVER NO LESS THAN TWO CONSECUTIVE SPANS.
6. ITEMS SUSPENDED FROM FLOOR AND ROOF DECK SYSTEMS SHALL CONFORM TO THE APPROPRIATE TYPICAL DETAILS. IF ALTERNATE SUPPORT SYSTEMS FOR SUSPENDED ITEMS ARE DESIRED, THE CONTRACTOR SHALL SUBMIT SHOP DRAWINGS TO THE ARCHITECT FOR APPROVAL. ALTERNATE SUPPORT FRAMING SHALL CONNECT TO APPROPRIATE STEEL FRAMING AND SHALL NOT CONNECT TO METAL DECK.
7. IT SHALL BE THE CONTRACTOR'S RESPONSIBILITY TO PROVIDE SHORING AS REQUIRED TO ENSURE THAT CONSTRUCTION LOADS PLACED ON PLAIN OR COMPOSITE METAL DECK DO NOT EXCEED THE DECK LOAD BEARING CAPACITY.
8. HEAVY MOVING CONSTRUCTION LOADS, SUCH AS THOSE EXERTED BY MECHANICAL LIFT, ON COMPOSITE METAL DECK WITH CONCRETE FILL SHALL BE A MAXIMUM OF 3000 LBS AND PREVENTED FROM OVERLOADING ANY OPEN BAY AREAS. IF ANY LIFTS ARE USED BY THE CONTRACTOR ON THE SLAB ON METAL DECK, THE CONTRACTOR MUST PROVE TO THE OWNER THAT ANY CRACKING IN THE SLAB ON METAL DECK WAS NOT CREATED BY THE USE OF THE LIFT.
9. SHOP DRAWINGS SHALL BE SUBMITTED TO THE ARCHITECT FOR APPROVAL PRIOR TO ANY FABRICATION.
10. VENTED DECK SHALL NOT BE ALLOWED ON THIS PROJECT.

I. COLD-FORMED STEEL

1. COLD-FORMED STEEL FRAMING SHALL CONFORM TO THE REQUIREMENTS OF THE 2016 EDITION OF THE NORTH AMERICAN SPECIFICATION FOR THE DESIGN OF COLD-FORMED STEEL STRUCTURAL MEMBERS (AISI), THE STEEL STUD MANUFACTURERS ASSOCIATION (SSMA STANDARDS), AND REQUIREMENTS AS STATED IN THE FRAMING NOTES.
2. COLD-FORMED STEEL STUDS AND JOISTS SHALL BE STRUCTURAL GRADE PER ASTM A653 AND THE FOLLOWING YIELD STRENGTHS:
   A. ALL MATERIALS USED IN INTERIOR APPLICATIONS SHALL BE 33 KSI, U.N.O.
   B. ALL MATERIALS USED IN EXTERIOR APPLICATIONS SHALL BE 50 KSI.
3. SELF-DRILLING SCREWS TO BE HILTI KWIK-PRO OR KWIK-FLEX SCREWS OR APPROVED EQUAL. #6 SCREWS MINIMUM TO BE USED WHERE NOT SPECIFICALLY NOTED ON THESE PLANS. PLACE IN ACCORDANCE WITH ESR-2196. TYPICAL FASTENER SIZES NOTED IN THE DRAWINGS:
   A. #6 SCREWS = 0.138" DIA. x 1 1/4" MINIMUM LENGTH
   B. #8 SCREWS = 0.164" DIA. x 1 1/4" MINIMUM LENGTH
4. SHOT PINS SHALL BE HILTI X-U, 0.157" MINIMUM DIA., OR EQUAL TO BE APPROVED BY THE EOR. INSTALL PER MANUFACTURER AND ESR-2269 OR AS OTHERWISE INDICATED IN THE DETAILS.
5. WALL TRACK SHALL BE UNPUNCHED WITH GAUGE TO MATCH STUD FRAMING (UNO). MINIMUM SIZE TO BE 362 T125-33.
6. UTILITY PUNCHOUT HOLES IN STUDS SHALL BE LOCATED AWAY FROM CONNECTIONS UNLESS SPECIFICALLY DETAILED.
7. OPENINGS IN STUD WEBS OTHER THAN STANDARD HOLES PUNCHED BY THE MANUFACTURER ARE PROHIBITED UNLESS SPECIFICALLY DETAILED.

J. OPEN WEB STEEL JOISTS

1. ALL OPEN WEB STEEL JOISTS SHALL CONFIRM TO THE STANDARD SPECIFICATIONS OF THE STEEL JOIST INSTITUTE.
2. ALL OPEN WEB JOISTS SHALL HAVE BRIDGING AS SHOWN ON THE DRAWINGS AND AS RECOMMENDED BY THE STEEL JOIST INSTITUTE.
3. ALL OPEN WEB JOISTS SHALL BE WELDED OR BOLTED TO SUPPORTS AS DETAILED ON THE DRAWINGS AND DESIGNED FOR LOADING TO THE CONNECTION WHERE INDICATED ON PLANS AND DETAILS.
4. ALL OPEN WEB JOISTS SHALL BE SHOP PAINTED AND TOUCHED UP IN THE FIELD AFTER ERECTION, EXCEPT AT LOCATIONS TO RECEIVE FIREPROOFING.
5. ALL OPEN WEB JOISTS ARE TO BE DESIGNED BY THE MANUFACTURER TO SUPPORT THE DESIGN LOADS PROVIDED ON THESE DRAWINGS. THE CONTRACTOR SHALL COORDINATE LOADS AND DIMENSIONS AS NECESSARY.
6. SHOP DRAWINGS AND STAMPED ENGINEERING CALCULATIONS OF ALL OPEN WEB JOISTS SHALL BE SUBMITTED TO THE ARCHITECT FOR APPROVAL PRIOR TO ANY FABRICATION.

M. SHOP DRAWINGS

1. SHOP DRAWINGS SHALL BE SUBMITTED FOR ALL STRUCTURAL ITEMS IN ADDITION TO ITEMS REQUIRED BY ARCHITECTURAL SPECIFICATIONS.
2. THE CONTRACTOR SHALL REVIEW ALL SHOP DRAWINGS PRIOR TO SUBMITTAL. ITEMS NOT IN ACCORDANCE WITH CONTRACT DRAWINGS SHALL BE FLAGGED FOR REVIEW.
3. VERIFY ALL DIMENSIONS WITH ARCHITECTURAL DRAWINGS.
4. ANY CHANGES, SUBSTITUTIONS, OR DEVIATIONS FROM ORIGINAL STRUCTURAL DRAWINGS SHALL BE RED-LINED OR FLAGGED BY SUBMITTING PARTIES.
5. THE STRUCTURAL ENGINEER HAS THE RIGHT TO APPROVE OR DISAPPROVE ANY CHANGES TO THE ORIGINAL DRAWINGS AT ANY TIME, BEFORE OR AFTER SHOP DRAWING REVIEW.
6. THE SHOP DRAWINGS DO NOT REPLACE THE ORIGINAL STRUCTURAL DRAWINGS. ITEMS OMITTED OR SHOWN INCORRECTLY BUT NOT FLAGGED BY THE STRUCTURAL ENGINEER OR ARCHITECT ARE NOT TO BE CONSIDERED CHANGES TO THE ORIGINAL CONTRACT DRAWING.
7. THE ADEQUACY OF ENGINEERING DESIGNS AND LAYOUT PERFORMED BY THE OTHERS RESTS WITH THE DESIGNING OR SUBMITTING AUTHORITY.
8. REVIEWING IS INTENDED ONLY AS AN AID TO THE CONTRACTOR IN OBTAINING CORRECT SHOP DRAWINGS. RESPONSIBILITY FOR CORRECTNESS SHALL REST WITH THE CONTRACTOR.
9. THE CONTRACTOR SHALL PROVIDE (1) FILE COPY OF ALL APPROVED SHOP DRAWINGS TO THE STRUCTURAL ENGINEER.

R. JOINT SEALANT

1. ALL JOINTS TO RECEIVE SEALANT SHALL BE THOROUGHLY CLEANED WITH CLEAN POTABLE WATER AND COMPRESSED AIR SUCH THAT THE CLEANED SURFACE IS FREE OF CONCRETE SLURRY, DUST, DIRT AND OTHER CONTAMINANTS.
2. JOINT SEALANT SHALL BE SIKAFLEX-2C NS AS MANUFACTURED BY SIKA CORPORATION. ALL JOINTS TO RECEIVE SEALANT SHALL BE PRIMED WITH SIKAFLEX PRIMER 492/202.
3. SEALANT SHALL NOT BE APPLIED UNTIL CONNCRETE OR GROUT HAS CURED FOR 45 DAYS, MIN.

S. POST-INSTALLED ANCHORS

1. WHEN DRILLING HOLES IN EXISTING MASONRY WALLS, IMPACT TOOLS SHALL NOT BE USED. ONLY ROTARY TOOLS SHALL BE USED.
2. EXPANSION ANCHORS IN CONCRETE OR MASONRY SHALL BE SIMPSON "STRONG-BOLT 2" PER ICC-ES ESR-3037 (IN CONCRETE) OR IAPMO-ES ER-240 (IN MASONRY), HILTI "KWIK BOLT 3" PER ICC-ES ESR-2302 (IN CONCRETE) OR ICC-ES ESR-1385 (IN MASONRY); DEWALT/POWERS POWER-STUD+SD2 PER ICC-ES ESR-2502 (IN CONCRETE) OR ICC-ES ESR-2966 (IN MASONRY) OR APPROVED EQUAL. PERIODIC SPECIAL INSPECTION REQUIRED.
3. EPOXY/ADHESIVE ANCHORS SHALL USE SIMPSON "SET-XP" EPOXY PER ICC-ES ESR-2508 (IN CONCRETE) OR PER ICC-ES ER-265 (IN MASONRY), HILTI "HIT-RE 500-SD" PER ICC-ES ESR-2322 (IN CONCRETE) OR HILTI "HIT-HY 150 MAX" PER ICC-ES ESR-1967 (IN MASONRY); DEWALT PURE 110+ EPOXY PER ICC-ES ESR 3298 (IN CONCRETE) OR DEWALT AC100+ GOLD PER ICC-ES ESR (IN MASONRY); OR APPROVED EQUAL. PERIODIC SPECIAL INSPECTION REQUIRED.
4. ALL EPOXY ADHESIVE ANCHORS IN HOLLOW MASONRY WALL SHALL HAVE SCREEN TUBES. SCREEN TUBES SHALL BE SIMPSON ETS STEEL SCREEN TUBES OR APPROVED EQUAL. WHERE ANCHORS ARE PLACED IN MASONRY, SIMPSON ETX-P PLASTIC SCREEN TUBES OR APPROVED EQUAL SHALL BE USED.
5. HEAVY DUTY SCREW ANCHORS SHALL BE SIMPSON "TITEN HD" PER ICC-ES ESR-2713 (IN CONCRETE) OR ICC-ES ESR-1056 (IN MASONRY), HILTI "KWIK HUS-EZ" PER ICC-ES ESR-3027 (IN CONCRETE) OR ICC-ES ESR-3056 (IN MASONRY); DEWALT SCREWBOLT+ PER ICC-ES ESR-3889 (IN CONCRETE) OR ICC-ES ESR-4042 (IN MASONRY); OR APPROVED EQUAL. PERIODIC SPECIAL INSPECTION REQUIRED. ANCHOR PLACEMENT RESTRICTIONS ARE PER THE RESPECTIVE REPORTS LISTED ABOVE AND AS FOLLOWS:
   A. SIMPSON TITEN HDS IN THE FACE OF MASONRY SHALL NOT BE PLACED WITHIN 1 1/2" OF HEAD JOINTS AND SHALL HAVE A MINIMUM DISTANCE OF 4" TO ANY EDGE OF WALL.
   B. HILTI KWIK HUS-EZ IN THE FACE OF MASONRY SHALL NOT BE PLACED WITHIN 1 1/4" OF HEAD JOINTS AND SHALL HAVE A MINIMUM DISTANCE OF 4" TO ANY EDGE OF THE WALL.
   C. DEWALT SCREWBOLT+ IN THE FACE OF MASONRY SHALL NOT BE PLACED WITHIN 1 1/4" OF HEAD JOINTS. MINIMUM EDGE DISTANCES PER ESR-4042, TABLE 2.
6. ANCHORS SHALL BE INSTALLED IN ACCORDANCE WITH ALL EVALUATION REPORT AND MANUFACTURER RECOMMENDATIONS AND SPECIAL INSPECTION SHALL BE PROVIDED WHERE REQUIRED.
7. WHERE POST-INSTALLED ANCHORS ARE TO BE USED, IT SHALL BE THE CONTRACTOR'S DIRECT RESPONSIBILITY TO COORDINATE THE LOCATIONS OF REINFORCING STEEL OR OTHER SIMILARLY EMBEDDED ITEMS TO WORK WITH POST-INSTALLED ANCHORS AND TO AVOID CONFLICTS WHEN DRILLING HOLES.
8. INSTALLATION OF ADHESIVE ANCHORS THAT ARE TO BE UNDER SUSTAINED TENSION LOADING IN HORIZONTAL OR VERTICAL OVERHEAD ORIENTATION SHALL BE DONE BY A CERTIFIED ADHESIVE ANCHOR INSTALLER (AAI) AS CERTIFIED THROUGH ACI AND IN ACCORDANCE WITH 318-2014 (SECTION 17.8.2.2). PROOF OF CURRENT CERTIFICATION SHALL BE SUBMITTED TO THE ARCHITECT FOR APPROVAL PRIOR TO COMMENCEMENT OF INSTALLATION.
9. PER ACI 318-2014 (SECTION 17.1.2), ADHESIVE ANCHORS SHALL BE INSTALLED IN CONCRETE HAVING A MINIMUM AGE OF 21 DAYS AT THE TIME OF ANCHOR INSTALLATION.

SHEET INDEX

SHEET NAME	SHEET NUMBER
STRUCTURAL GENERAL NOTES	S0
SPECIAL INSPECTIONS & QUALITY ASSURANCE	S0.1
TYP. CONC. & FOUNDATION DETAILS	S0.2
TYP. CONC. & CMU DETAILS	S0.3
TYP. MASONRY DETAILS	S0.4
TYP. STEEL DETAILS	S0.5
TYP. ROOF FRAMING DETAILS	S0.6
TYP. ROOF FRAMING DETAILS	S0.7
TYP. INTERIOR COLD-FORMED STEEL DETAILS	S0.8
TYP. INTERIOR COLD-FORMED STEEL DETAILS	S0.9
TYP. SITE DETAILS	S0.10
FOUNDATION PLAN	S2
LOW ROOF FRAMING PLAN	S3
HIGH ROOF FRAMING PLAN	S4
STRUCTURAL SECTIONS	S7
STRUCTURAL SECTIONS	S8
STRUCTURAL WALL ELEVATIONS	S9
CANOPY ENLARGED PLANS AND SECTIONS	S10
STRUCTURAL DETAILS	SD1
CLERESTORY TRUSS ELEVATIONS AND DETAILS	SD2
SITE DETAILS	SD3

Boise Wilcox, SE
Digitally signed by Boise Wilcox, SE
DN: C=US, E=boise@nelson-wilcox.com, O=Nelson Wilcox Structural Engineers, CN="Boise Wilcox, SE"
Date: 2024.01.04 15:18:15-08'00'

tsk
225 South Arlington Avenue,
Suite A
Reno NV, 89501
phone: 775.857.2949
fax: 775.857.2403
www.tska.com

PROFESSIONAL ENGINEER - STATE OF NEVADA
BOISE
ROBERT KYLE WILCOX
Exp: 6-30-24
CIVIL/STRUCTURAL
No. 19778
01/04/2024

THESE DRAWINGS AND SPECIFICATIONS ARE THE PROPERTY OF TATE SNYDER KIMSEY ARCHITECTS AND MAY NOT BE REPRODUCED OR USED FOR ANY PURPOSE WITHOUT THE ARCHITECTS WRITTEN CONSENT.
AS INSTRUMENTS OF SERVICE, THESE DOCUMENTS ARE NOT FINAL AND READY FOR USE, AND THEREFORE NOT VALID, UNLESS THEY ARE SEALED, SIGNED AND DATED.
Copyright, Ltd 2023

Consultant

NELSON WILCOX
STRUCTURAL ENGINEERS
225 S. Arlington Ave, Ste B
Reno, Nevada 89501
(775)-848-3166
(702)-290-5760

NWSE Project No: 20220057

PLEASE RECYCLE

Project
SPARKS Fire Station #6

6963 SCHEIDBAR ROAD, SPARKS NEVADA 89436

Job No: 22-043

Owner
CITY OF SPARKS

BID SET

REVISIONS		
REV	DATE	DESCRIPTION
A	05.18.23	Review Comments

Sheet Title
STRUCTURAL GENERAL NOTES

Date: 01/04/2024
Sheet No:
S0

2018 IBC TABLE 1705.3
REQUIRED SPECIAL INSPECTIONS AND TESTS OF CONCRETE CONSTRUCTION

TYPE	CONTINUOUS SPECIAL INSPECTION	PERIODIC SPECIAL INSPECTION	REFERENCED STANDARD	IBC REFERENCE
1. INSPECT REINFORCEMENT, INCLUDING PRESTRESSING TENDONS, AND VERIFY PLACEMENT.	--	--	ACI 318: CH. 20, 25.2, 25.3, 26.6.1-26.6.3	1908.4
2. REINFORCING BAR WELDING: A. VERIFY WELDABILITY OF REINFORCING BARS OTHER THAN ASTM 706; B. INSPECT SINGLE-PASS FILLET WELDS, MAXIMUM 5/16"; AND C. INSPECT ALL OTHER WELDS.	 -- X	 X X X	 AWS D1.4 ACI 318: 26.6.4	--
3. INSPECT ANCHORS CAST IN CONCRETE.	--	X	ACI 318: 17.8.2	--
4. INSPECT ANCHORS POST-INSTALLED IN HARDENED CONCRETE MEMBERS. A. ADHESIVE ANCHORS INSTALLED IN HORIZONTALLY OR UPWARDLY INCLINED ORIENTATIONS TO RESIST SUSTAINED TENSION LOADS. B. MECHANICAL ANCHORS AND ADHESIVE ANCHORS NOT DEFINED IN 4.A.	 X --	 X --	 ACI 318: 17.8.2.4 ACI 318: 17.8.2	--
5. VERIFY USE OF REQUIRED DESIGN MIX	--	X	ACI 318: CH. 19, 26.4.3, 26.4.4	1904.1, 1904.2, 1908.2, 1908.3
6. PRIOR TO CONCRETE PLACEMENT, FABRICATE SPECIMENS FOR STRENGTH TESTS, PERFORM SLUMP AND AIR CONTENT TESTS, AND DETERMINE THE TEMPERATURE OF THE CONCRETE.	X	--	ASTM C172 ASTM C31 ACI 318: 26.5, 26.12	1908.10
7. INSPECT CONCRETE AND SHOTCRETE PLACEMENT FOR PROPER APPLICATION TECHNIQUES.	--	X	ACI 318: 26.5	1908.6, 1908.7, 1908.8
8. VERIFY MAINTENANCE OF SPECIFIED CURING TEMPERATURE AND TECHNIQUES	--	X	ACI 318:26.5.3-26.5.5	1908.9
9. INSPECT PRESTRESSED CONCRETE FOR: A. APPLICATION OF PRESTRESSING FORCES; AND B. GROUTING OF BONDED PRESTRESSING TENDONS.	 X X	 -- --	ACI 318: 26.10	--
10. INSPECT ERECTION OF PRECAST CONCRETE MEMBERS.	--	X	ACI 318: 26.9	--
11. VERIFY IN-SITU CONCRETE STRENGTH, PRIOR TO STRESSING OF TENDONS IN POST-TENSIONED CONCRETE AND PRIOR TO REMOVAL OF THE SHORES AND FORMS FROM BEAMS AND STRUCTURAL SLABS.	--	X	ACI 318: 26.11.2	--
12. INSPECT FORMWORK FOR SHAPE, LOCATION AND DIMENSIONS OF THE CONCRETE MEMBER BEING FORMED.	--	X	ACI 318: 26.11.2 (b)	--

2018 IBC TABLE 1705.6
REQUIRED SPECIAL INSPECTIONS AND TEST OF SOILS

TYPE	CONTINUOUS SPECIAL INSPECTION	PERIODIC SPECIAL INSPECTION
1. VERIFY MATERIALS BELOW SHALLOW FOUNDATIONS ARE ADEQUATE TO ACHIEVE THE DESIGN BEARING CAPACITY.	--	X
2. VERIFY EXCAVATIONS ARE EXTENDED TO PROPER DEPTH AND HAVE REACHED PROPER MATERIAL.	--	X
3. PERFORM CLASSIFICATION AND TESTING OF COMPACTED FILL MATERIALS.	--	X
4. VERIFY USE OF PROPER MATERIALS, DENSITIES AND LIFT THICKNESS DURING PLACEMENT AND COMPACTION OF COMPACTED FILL.	X	--
5. PRIOR TO PLACEMENT OF COMPACTED FILL, INSPECT SUBGRADE AND VERIFY THAT SITE HAS BEEN PREPARED PROPERLY.	--	X

2018 IBC TABLE 1705.2.3
REQUIRED SPECIAL INSPECTIONS OF OPEN-WEB STEEL JOISTS AND JOIST GIRDERS

TYPE	CONTINUOUS SPECIAL INSPECTION	PERIODIC SPECIAL INSPECTION	REFERENCED STANDARD
1. INSTALLATION OF OPEN-WEB STEEL JOISTS AND JOIST GIRDERS.			
A. END CONNECTIONS - WELDING AND BOLTED.	--	X	SJI SPECIFICATIONS LISTED IN SECTION 2207.1.
B. BRIDGING - HORIZONTAL OR DIAGONAL	--	--	--
1. STANDARD BRIDGING	--	X	SJI SPECIFICATIONS LISTED IN SECTION 2207.1.
2. BRIDGING THAT DIFFERS FROM THE SJI SPECIFICATIONS LISTED IN SECTION 2207.1.	--	X	--

TMS 402/602-16 TABLE 3
MINIMUM VERIFICATION REQUIREMENTS

MINIMUM VERIFICATION	REQUIRED FOR QUALITY ASSURANCE			REFERENCE FOR CRITERIA
	LEVEL 1	LEVEL 2	**LEVEL 3**	TMS 602
1. PRIOR TO CONSTRUCTION, VERIFICATION OF COMPLIANCE OF SUBMITTALS.	R	R	**R**	ART. 1.5
2. PRIOR TO CONSTRUCTION, VERIFICATION OF f'_m and f'_{AAC}, EXCEPT WHERE SPECIFICALLY EXEMPTED BY THE CODE.	NR	R	**R**	ART. 1.4 B
3. DURING CONSTRUCTION, VERIFICATION OF SLUMP FLOW AND VISUAL STABILITY INDEX (VSI) WHEN SELF-CONSOLIDATING GROUT IS DELIVERED TO THE PROJECT SITE.	NR	R	**R**	ART. 1.5 & 1.6.3
4. DURING CONSTRUCTION, VERIFICATION OF f'_m and f'_{AAC} FOR EVERY 5,000 SQ. FT. (465 SQ. M.)	NR	NR	**R**	ART. 1.4 B
5. DURING CONSTRUCTION, VERIFICATION OF PROPORTIONS OF MATERIALS AS DELIVERED TO THE PROJECT SITE FOR PREMIXED OR PREBLENDED MOTOR, PRESTRESSING GROUT, AND GROUT OTHER THAN SELF-CONSOLIDATING GROUT.	NR	NR	**R**	ART. 1.4 B

TABLE 4 - MINIMUM SPECIAL INSPECTION

INSPECTION TASK	FREQUENCY[a]			REFERENCE FOR CRITERIA	
	LEVEL 1	LEVEL 2	**LEVEL 3**	TMS 402	TMS 602
1. AS MASONRY CONSTRUCTION BEGINS, VERIFY THAT THE FOLLOWING ARE IN COMPLIANCE:					
A. PROPORTION OF THE SITE-PREPARED MORTAR	NR	P	**P**		ART. 2.1, 2.6 A. & 2.6 C
B. GRADE AND SIZE OF PRESTRESSING TENDONS AND ANCHORAGES	NR	P	**P**		ART. 2.4 B. & 2.4 H
C. GRADE, TYPE AND SIZE OF REINFORCEMENT, CONNECTORS, ANCHOR BOLTS, AND PRESTRESSING TENDONS AND ANCHORAGES	NR	P	**P**		ART. 3.4 & 3.6A
D. PRESTRESSING TECHNIQUE	NR	P	**P**		ART. 3.6B
E. PROPERTIES OF THIN BED MORTAR FOR AAC MASONRY	NR	C[b]/P[c]	**C**		ART. 2.1 C.1
F. SAMPLE PANEL CONSTRUCTION	NR	P	**C**		ART. 1.6 D
2. PRIOR TO GROUTING, VERIFY THAT THE FOLLOWING ARE IN COMPLIANCE:					
A. GROUT SPACE	NR	P	**C**		ART. 3.2 D & 3.2 F
B. PLACEMENT OF PRESTRESSING TENDONS AND ANCHORAGES	NR	P	**P**	SEC. 10.8 & 10.9	ART. 2.4 & 3.6
C. PLACEMENT OF REINFORCEMENT, CONNECTORS, ANCHOR BOLTS	NR	P	**C**	SEC. 6.1, 6.3.1, 6.3.6. & 6.3.7	ART. 3.2 E & 3.4
D. PROPORTIONS OF SITE -PREPARED GROUT AND PRESTRESSING GROUT FOR BONDED TENDONS.	NR	P	**P**		ART. 2.6 E & 2.4 G.1.8
3. VERIFY COMPLIANCE OF THE FOLLOWING DURING CONSTRUCTION.					
A. MATERIALS AND PROCEDURES WITH THE APPROVED SUBMITTALS	NR	P	**P**		ART. 1.5
B. PLACEMENT OF MASONRY UNITS AND MORTAR JOINT CONSTRUCTION	NR	P	**P**		ART. 3.3 B
C. SIZE AND LOCATION OF STRUCTURAL MEMBERS	NR	P	**P**		ART. 3.3 F
D. GRADE, TYPE AND SIZE AND LOCATION OF ANCHORS, INCLUDING OTHER DETAILS OF ANCHORAGE OF MASONRY TO STRUCTURAL MEMBERS, FRAMES, OR OTHER CONSTRUCTION	NR	P	**C**	SEC. 1.2.1(E), 6.2.1, & 6.3.1	
E. WELDING OF REINFORCEMENT	NR	C	**C**	SEC. 6.1.6.1.2	
F. PREPARATION, CONSTRUCTION, AND PROTECTION OF MASONRY DURING COLD WEATHER (TEMPERATURE BELOW 40°F (4.4°C)) OR HOT WEATHER (TEMPERATURE ABOVE 90°F (32.2°C))	NR	P	**P**		ART. 1.8 C. 1B.D
G. APPLICATION AND MEASUREMENT OF THE PRESTRESSING FORCE	NR	C	**C**		ART. 3.6 B
H. PLACEMENT OF GROUT AND PRESTRESSING GROUT FOR BONDED TENDONS IS IN COMPLIANCE	NR	C	**C**		ART. 3.5 & 3.6 C
I. PLACEMENT OF AAC MASONRY UNITS AND CONSTRUCTION OF THE THIN-BED MORTAR JOINTS.	NR	C[b]/P[c]	**C**		ART. 3.3.B.9 & 3.3 F.1.B
4. OBSERVE PREPARATION OF GROUT SPECIMENS, MORTAR SPECIMENS AND/OR PRISMS.	NR	P	**C**		ART. 1.4 B.2.A.3, 1.4.B 2.B.3, 1.4.B 2.C.3 1.4. B.3, & 1.4 B.4

a. FREQUENCY REFERS TO THE FREQUENCE OF INSPECTION, WHICH MAY BE CONTINUOUS DURING THE LISTED TASK OR PERIODICALLY DURING THE LISTED TASK. AS DEFINED IN THE TABLE. R=REQUIRED, NR=NOT REQUIRED, P=PERIODIC, C=CONTINUOUS
b. REQUIRED FOR THE FIRST 5000 SQUARE FEET (465 SQUARE METERS) OF AAC MASONRY.
c. REQUIRE AFTER THE FIRST 5000 SQUARE FEET (465 SQUARE METERS) OF AAC MASONRY.

AISC 360 CHAPTER N AND 2018 IBC CHAPTER 17
REQUIRED VERIFICATION AND SPECIAL INSPECTION OF STEEL CONSTRUCTION

TYPE	CONTINUOUS SPECIAL INSPECTION	PERIODIC SPECIAL INSPECTION	REFERENCED STANDARD	IBC REFERENCE
1. MATERIAL VERIFICATION OF HIGH-STRENGTH BOLTS, NUTS AND WASHERS:			AISC 360 CHAPTER N	
A. IDENTIFICATION MARKINGS TO CONFORM TO ASTM STANDARDS SPECIFIED IN THE APPROVED CONSTRUCTION DOCUMENTS.	--	X	APPLICABLE ASTM MATERIAL SPECIFICATIONS; AISC 360, SECTION A3.3	--
B. MANUFACTURER'S CERTIFICATE OF COMPLIANCE REQUIRED.	--	X	--	--
2. INSPECTION OF HIGH-STRENGTH BOLTING:			AISC 360 CHAPTER N	
A. BEARING-TYPE CONNECTIONS.	--	X	AISC 360, SECTION M2.5	--
B. SLIP-CRITICAL CONNECTIONS.	X	--		
3. MATERIAL VERIFICATION OF STRUCTURAL STEEL:			AISC 360 CHAPTER N	
A. IDENTIFICATION MARKINGS TO CONFORM TO ASTM STANDARDS SPECIFIED IN THE APPROVED CONSTRUCTION DOCUMENTS.	--	--	ASTM A 6 or ASTM A 568	--
B. MANUFACTURER'S CERTIFIED MILL TEST REPORTS.	--	--	ASTM A 6 or ASTM A 568	
4. MATERIAL VERIFICATION OF WELD FILLER MATERIALS:			AISC 360 CHAPTER N	
A. IDENTIFICATION MARKINGS TO CONFORM TO AWS SPECIFICATION IN THE APPROVED CONSTRUCTION DOCUMENTS.	--	--	AISC 360, SECTION A3.5	--
B. MANUFACTURER'S CERTIFICATE OF COMPLIANCE REQUIRED.	--	--	--	--
5. INSPECTION OF WELDING:			AISC 360 CHAPTER N	
A. STRUCTURAL STEEL:	--	--		
1. COMPLETE AND PARTIAL PENETRATION GROOVE WELDS.	X	--	AWS D1.1	--
2. MULTIPASS FILLET WELDS.	X	--		
3. SINGLE-PASS FILLET WELDS > 5/16"	X	--		
4. SINGLE-PASS FILLETS WELDS ≤5/16"	--	X		
5. FLOOR AND ROOF DECK WELDS.	--	X	AWS D1.3	1705.2.2
B. REINFORCING STEEL:	--	--		
1. VERIFICATION OF WELDABILITY OF REINFORCING STEEL OTHER THAN ASTM A706.	--	X	AWS D1.4 ACI 318: 3.5.2	1705.2.2
2. REINFORCING STEEL-RESISTING FLEXURAL AND AXIAL FORCES IN INTERMEDIATE AND SPECIAL MOMENT FRAMES, AND BOUNDARY ELEMENTS OF SPECIAL REINFORCED MASONRY SHEAR WALLS AND SHEAR REINFORCEMENT.	X	--		
3. SHEAR REINFORCEMENT.	X	--		
4. OTHER REINFORCING STEEL.	--	X		
6. INSPECTION OF STEEL FRAME JOINT DETAILS FOR COMPLIANCE WITH APPROVED CONSTRUCTION DOCUMENTS:			--	--
A. DETAILS SUCH AS BRACING AND STIFFENING.	--	X		
B. MEMBER LOCATIONS.	--	X		
C. APPLICATION OF JOINT DETAILS AT EACH CONNECTION.	--	X		

QUALITY ASSURANCE

I. QUALITY ASSURANCE PLAN

A. B. THE INTENT OF THIS QUALITY ASSURANCE PLAN IS TO IDENTIFY STRUCTURAL SYSTEMS OR ELEMENTS THAT ARE CRITICALLY IMPORTANT TO THE STRUCTURE'S ABILITY TO SAFELY RESIST CODE REQUIRED LOADS. QUALITY ASSURANCE FOR THE ITEMS LISTED BELOW WILL BE ACCOMPLISHED THROUGH THE USE OF SPECIAL INSPECTION & MATERIALS TESTING AND STRUCTURAL OBSERVATION. IN ADDITION, THE CONTRACTOR SHALL SUBMIT A WRITTEN STATEMENT OF RESPONSIBILITY TO THE BUILDING OFFICIAL AND OWNER IN ACCORDANCE WITH THE 2018 IBC SECTION 1704.4.

B. LATERAL FORCE RESISTING SYSTEM(S): SPECIAL REINFORCED MASONRY SHEAR WALLS.

C. COMPONENTS & ELEMENTS: MASONRY WALLS AND THEIR ANCHORAGE.

II. SPECIAL INSPECTION AND MATERIAL TESTING

A. SPECIAL INSPECTION AND ASSOCIATED MATERIALS TESTING SHALL BE PERFORMED FOR THE PROCESSES AND MATERIALS REQUIRED FOR CONSTRUCTION. THE TYPE AND FREQUENCY OF SPECIAL INSPECTIONS AND MATERIALS TESTING AS WELL AS THE FREQUENCY AND DISTRIBUTION OF RELATED REPORTS SHALL BE AS INDICATED IN THE CONSTRUCTION DOCUMENTS AND AS REQUIRED BY ALL APPLICABLE CODES.

B. THE SPECIAL INSPECTOR SHALL OBSERVE THE WORK FOR COMPLIANCE WITH THE CONSTRUCTION DOCUMENTS. THE SPECIAL INSPECTOR SHALL FURNISH INSPECTION REPORTS TO THE ARCHITECT, OWNER AND BUILDING OFFICIAL. ALL DISCREPANCIES SHALL BE BROUGHT TO THE IMMEDIATE ATTENTION OF THE CONTRACTOR FOR CORRECTION, THEN IF UNCORRECTED, TO THE ARCHITECT, OWNER AND BUILDING OFFICIAL. AT THE CONCLUSION OF WORK, THE SPECIAL INSPECTOR SHALL SUBMIT A FINAL REPORT TO THE ARCHITECT, OWNER AND BUILDING OFFICIAL INDICATING THE WORK REQUIRING SPECIAL INSPECTION WAS INSPECTED AND IS IN CONFORMANCE WITH THE CONSTRUCTION DOCUMENTS AND THAT ALL DISCREPANCIES NOTED IN THE INSPECTION REPORTS HAVE BEEN CORRECTED.

C. SPECIAL INSPECTIONS IN ACCORDANCE WITH 2018 IBC CHAPTER 17 SHALL BE REQUIRED FOR THE FOLLOWING STRUCTURAL ITEMS:

1. STEEL CONSTRUCTION IN ACCORDANCE WITH AISC 360 CHAPTER FOR STRUCTURAL STEEL AND 2018 IBC TABLE 1705.2.3 FOR OTHER STEEL.
2. CONCRETE CONSTRUCTION IN ACCORDANCE WITH 2018 IBC TABLE 1705.3.
3. MASONRY CONSTRUCTION IN ACCORDANCE WITH TMS 402/602-16 TABLE 3 AND 4.
4. SOILS IN ACCORDANCE WITH 2018 IBC TABLE 1705.6.
5. POST INSTALLED ANCHORS IN ACCORDANCE WITH EVALUATION REPORTS AND MANUFACTURER RECOMMENDATIONS.

D. IN ADDITION TO THE SPECIAL INSPECTIONS LISTED ABOVE, SPECIAL INSPECTION FOR SEISMIC RESISTANCE IN ACCORDANCE WITH 2018 IBC SECTIONS 1705.12 1705.13 SHALL REQUIRED FOR THE FOLLOWING STRUCTURAL ITEMS:

1. STEEL CONSTRUCTION INSPECTION AND NON-DESTRUCTIVE TESTING IN ACCORDANCE AISC CHAPTER 341 CHAPTER J FOR THE ELEMENTS OF THE LATERAL FORCE RESISTING SYSTEM.
2. EXTERIOR LIGHT GAUGE WALLS AND MASONRY VENEER PERIODIC SPECIAL INSPECTION IN ACCORDANCE WITH 2018 IBC SECTION 1705.12.5.

E. THE SPECIAL INSPECTIONS LISTED ABOVE ARE NOT INTENDED TO BE ALL INCLUSIVE AND ONLY REPRESENT SPECIAL INSPECTIONS FOR STRUCTURAL PORTIONS OF THE WORK. ADDITIONAL SPECIAL INSPECTIONS OF ARCHITECTURAL, MECHANICAL, ELECTRICAL, PLUMBING OR OTHER SYSTEMS MAY BE REQUIRED. REFER TO THE APPROPRIATE DESIGN DISCIPLINES FOR ADDITIONAL INFORMATION.

F. WHERE PERIODICAL INSPECTIONS ARE REQUIRED, THE FIRST INSPECTION SHALL OCCUR AT THE START OF THE CONSTRUCTION TASK BEING INSPECTED.

III. STRUCTURAL OBSERVATION

A. THE CONTRACTOR SHALL PROVIDE THE ARCHITECT WITH WRITTEN NOTICE 48 HOURS PRIOR TO THE FOLLOWING CONSTRUCTION ACTIVITIES SO THAT APPROPRIATE STRUCTURAL OBSERVATION MAY BE PERFORMED: CONCRETE PLACEMENT, STEEL ERECTION, DIAPHRAGM NAILING/WELDING, AND GROUTING OF MASONRY. DEFICIENCIES WILL BE REPORTED IN WRITING. AT THE CONCLUSION OF WORK, THE STRUCTURAL ENGINEER WILL REVIEW THE PROJECT FOR GENERAL CONFORMANCE WITH PROJECT REQUIREMENTS. IF, IN THE OPINION OF THE STRUCTURAL ENGINEER, THE PROJECT STILL CONTAINS REPORTED DEFICIENCIES THAT HAVE NOT BEEN ADDRESSED BY THE CONTRACTOR, A WRITTEN STATEMENT WILL BE ISSUED INDICATING THAT SITE VISITS HAVE BEEN MADE AND THAT CERTAIN DEFICIENCIES REMAIN UNRESOLVED.

tsk
225 South Arlington Avenue,
Suite A
Reno NV, 89501
phone: 775.857.2949
fax: 775.857.2403
www.tska.com

PROFESSIONAL ENGINEER - STATE OF NEVADA
ROBERT KYLE WILCOX
Exp: 6-30-24
CIVIL/STRUCTURAL
No. 19779
01/04/2024

THESE DRAWINGS AND SPECIFICATIONS ARE THE PROPERTY OF TATE SNYDER KIMSEY ARCHITECTS AND MAY NOT BE REPRODUCED OR USED FOR ANY PURPOSE WITHOUT THE ARCHITECTS WRITTEN CONSENT. AS INSTRUMENTS OF SERVICE, THESE DOCUMENTS ARE NOT FINAL AND READY FOR USE, AND THEREFORE NOT VALID, UNLESS THEY ARE SEALED, SIGNED AND DATED.

Copyright, Ltd 2023

Consultant

NELSON WILCOX
STRUCTURAL ENGINEERS
225 S. Arlington Ave, Ste B (775)-848-3166
Reno, Nevada 89501 (702)-290-5760

NWSE Project No: 20220057

PLEASE RECYCLE

Project
SPARKS Fire Station #6

6963 SCHEIDBAR ROAD, SPARKS NEVADA 89436

Job No: 22-043

Owner
CITY OF SPARKS

CITY OF SPARKS FIRE DEPARTMENT Est. 1905

BID SET

REVISIONS

REV	DATE	DESCRIPTION
A	05.18.23	Review Comments

Sheet Title
SPECIAL INSPECTIONS & QUALITY ASSURANCE

Date: 01/04/2024

Sheet No:

S0.1

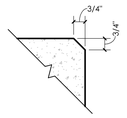

NOTES:
CHAMFER ALL EXPOSED CORNERS OF CONCRETE WALLS, COLUMNS, BEAMS, ETC., EXCEPT WHERE DETAILS OTHERWISE.

14 TYP. CONCRETE CHAMFER
3" = 1'-0"

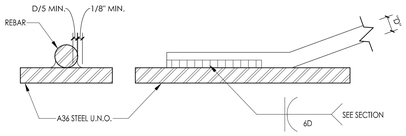

NOTES:
1. REBAR TO BE WELDED SHALL BE ASTM A706.
2. ALL PREHEATING AND WELDING SHALL BE DONE IN ACCORDANCE WITH AWS D1.4.
3. ALL REBAR WELDING SHALL BE CONTINUOUSLY INSPECTED BY A QUALIFIED LABORATORY.

9 REINFORCING WELDING DETAIL
3" = 1'-0"

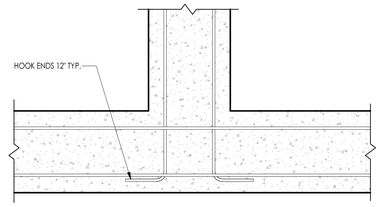

FOOTING INTERSECTION (PLAN VIEW)

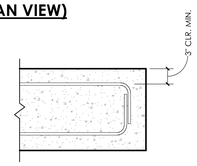

FOOTING END (PLAN VIEW)

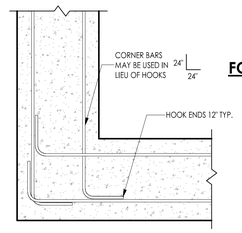

NOTES:
SEE PLAN AND SCHEDULES FOR FOOTING SIZE AND REINF. TYP

FOOTING CORNER (PLAN VIEW)

6 CONC. FTG. TYP. REINF. LAP
1" = 1'-0"

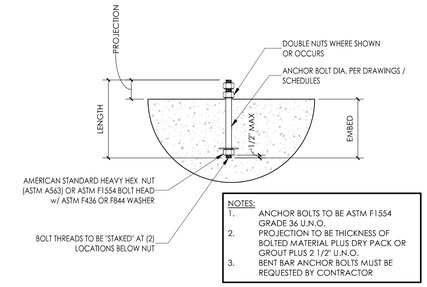

NOTES:
1. ANCHOR BOLTS TO BE ASTM F1554 GRADE 36 U.N.O.
2. PROJECTION TO BE THICKNESS OF BOLTED MATERIAL PLUS DRY PACK OR GROUT PLUS 2 1/2" U.N.O.
3. BENT BAR ANCHOR BOLTS MUST BE REQUESTED BY CONTRACTOR

1 CONCRETE ANCHOR BOLT TYPICAL
1 1/2" = 1'-0"

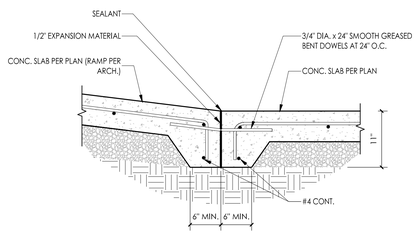

15 RAMP TOP & BOT. SECTION
1" = 1'-0"

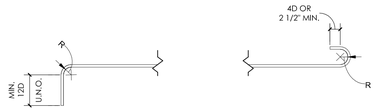

90 DEG. BEND 180 DEG. BEND

1. R=3D FOR #3 THROUGH #8
2. R=4D FOR #9 THROUGH #11
3. R=5D FOR #14 THROUGH #18

10 REINF. TYP. HOOKS AND BENDS
1" = 1'-0"

NOTES:
1. USE JOINT PROTECTORS AT ALL SLAB JOINT INTERSECTIONS WHEN SAWCUTTING.
2. SEE DETAIL 1/S0.3 FOR TYP. CONSTRUCTION JOINT (C.J.).
3. ALTERNATE S.J. AND D.J. AT SLAB CONTROL JOINTS

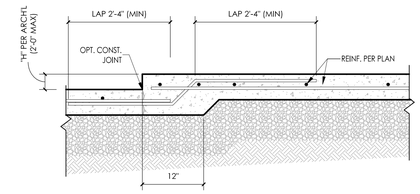

2 STEP IN SLAB
1" = 1'-0"

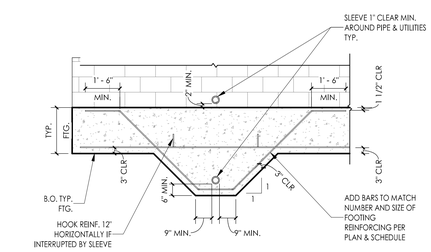

PERPENDICULAR ELEVATION

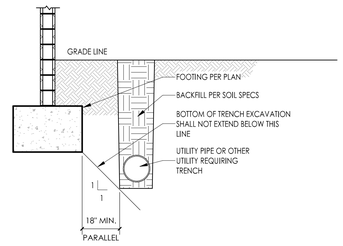

PARALLEL

16 FND UTILITIES PARALLEL AND PERP.
3/8" = 1'-0"

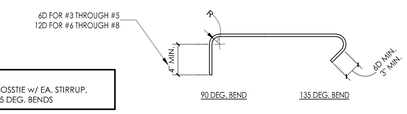

NOTES:
PUT CROSSTIE w/ EA. STIRRUP, ALT. 135 DEG. BENDS

TYP. CROSSTIE

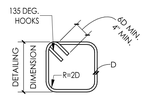

TYP. TIE

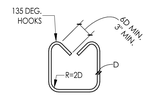

TYP. STIRRUP

11 REINFORCING HOOKS & BENDS FOR TIES
1" = 1'-0"

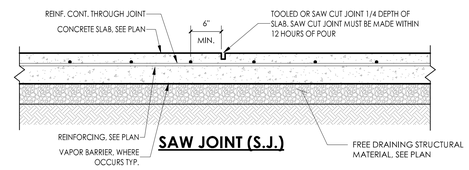

SAW JOINT (S.J.)

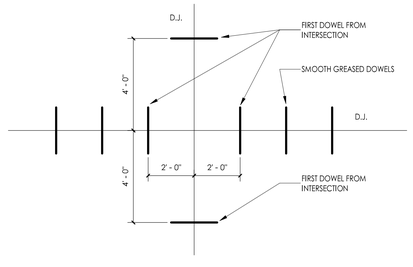

12 SLAB DOWELED JOINT INTERSECTION
3/8" = 1'-0"

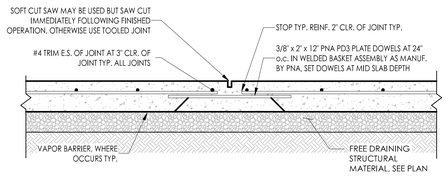

DOWELED JOINT (D.J.)

7 CONCRETE SLAB ON GRADE CONTROL JOINTS
1" = 1'-0"

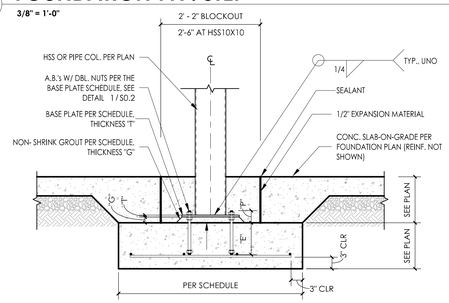

4 TYP. INTERIOR HSS COLUMN FOOTING
3/4" = 1'-0"

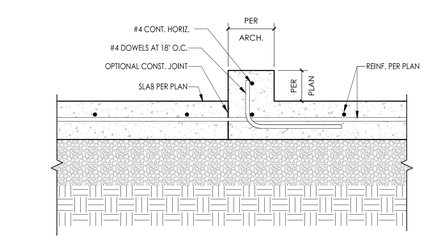

17 CURB ON SLAB
1 1/2" = 1'-0"

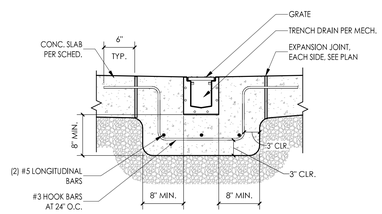

NOTE:
1. SLAB REINFORCING NOT SHOWN FOR CLARITY.

13 TRENCH DRAIN
1" = 1'-0"

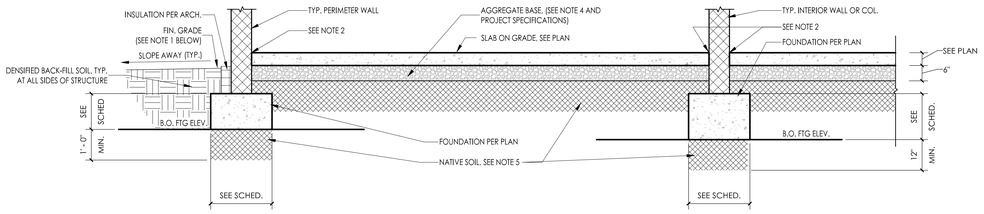

NOTES:
1. SEE CIVIL FOR FINAL GRADES AND EXTERIOR IMPROVEMENTS.
2. THE INTERIOR FLOOR SLAB - BUILDING WALL JOINT SHALL BE CAULKED WITH SIKAFLEX-2c NS OR APPROVED EQUAL. SEE STRUCTURAL NOTES SECTION R. JOINT SEALANT.
3. SEE GENERAL NOTES SECTION C AND PROJECT SPECIFICATIONS FOR SOILS PREPARATION.
4. FOUNDATIONS, INTERIOR SLABS ON GRADE AND EXTERIOR SLABS ON GRADE SHALL BE PLACED ON A MINIMUM OF 6" TYPE 2, CLASS B AGGREGATE BASE PER GEOTECHNICAL.
5. SCARIFY NATIVE SOILS TO A DEPTH OF 12". MOISTURE CONDITION TO WITHIN 3% OF OPTIMUM, AND DENSIFY TO AT LEAST 90% RELATIVE COMPACTION PER GEOTECHNICAL.

8 TYP. BUILDING FOUNDATION PREP.
1/2" = 1'-0"

tsk
225 South Arlington Avenue, Suite A
Reno NV, 89501
phone: 775.857.2949
fax: 775.857.2403
www.tska.com

THESE DRAWINGS AND SPECIFICATIONS ARE THE PROPERTY OF TATE SNYDER KIMSEY ARCHITECTS AND MAY NOT BE REPRODUCED OR USED FOR ANY PURPOSE WITHOUT THE ARCHITECTS WRITTEN CONSENT. AS INSTRUMENTS OF SERVICE, THESE DOCUMENTS ARE NOT FINAL AND READY FOR USE, AND THEREFORE NOT VALID, UNLESS THEY ARE SEALED, SIGNED AND DATED.

Copyright, Ltd 2023

Consultant

NELSON WILCOX
STRUCTURAL ENGINEERS
225 S. Arlington Ave, Ste B
Reno, Nevada 89501
(775)-848-3166
(702)-290-5760

NWSE Project No: 20220057

PLEASE RECYCLE

Project
SPARKS Fire Station #6

6963 SCHEIDBAR ROAD, SPARKS NEVADA 89436

Job No: 22-043

Owner
CITY OF SPARKS

BID SET

REVISIONS

REV	DATE	DESCRIPTION
A	05.18.23	Review Comments

Sheet Title
TYP. CONC. & FOUNDATION DETAILS

Date: 01/04/2024

Sheet No:
S0.2

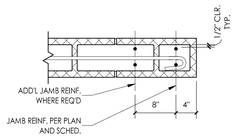

CMU JAMB REINFORCING SCHEDULE				
MARK	CMU SIZE	TOTAL BARS	BAR PLACEMENT	NOTES
	8"	(2) #5 VERT.	#5 E.F. IN ONE CELL	TYP., AT ALL OPENINGS, U.N.O.
	12"	(2) #6 VERT.	#6 E.F. IN ONE CELL	TYP., AT ALL OPENINGS, U.N.O.

NOTES:
1. SEE WALL ELEVATIONS FOR ADDITIONAL REQUIRED JAMB REINF.

12 CMU JAMB DETAIL
1" = 1'-0"

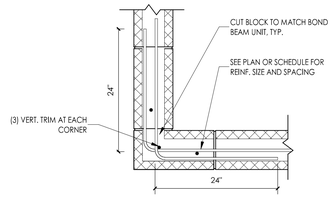

CORNER

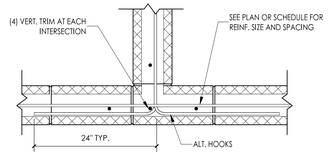

INTERSECTION

NOTES:
1. ALL TRIM REINF. TO MATCH SIZE OF WALL REINF., U.N.O. LAP ALL SPLICES PER GENERAL NOTES LAP SPLICE SCHEDULE.
2. COND. SIMILAR AT BLOCK WALLS w/ (2) LAYERS REINF.
3. MAY USE 24" x 24" CORNER BARS IN LIEU OF HORIZ. HOOKED BARS.

9 CMU TYP. CORNER AND INTERSECTION REINF.
1" = 1'-0"

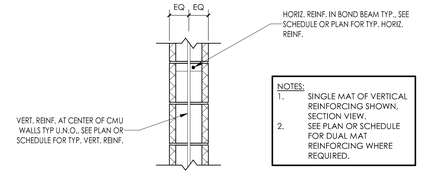

NOTES:
1. SINGLE MAT OF VERTICAL REINFORCING SHOWN, SECTION VIEW.
2. SEE PLAN OR SCHEDULE FOR DUAL MAT REINFORCING WHERE REQUIRED.

6 CMU TYP. PLACEMENT OF REINF.
1" = 1'-0"

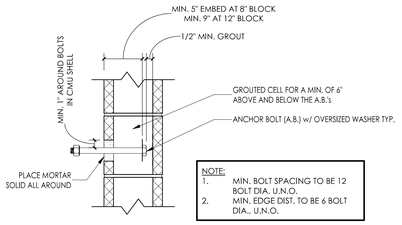

NOTE:
1. MIN. BOLT SPACING TO BE 12 BOLT DIA. U.N.O.
2. MIN. EDGE DIST. TO BE 6 BOLT DIA., U.N.O.

7 CMU ANCHOR BOLT TYPICAL
1 1/2" = 1'-0"

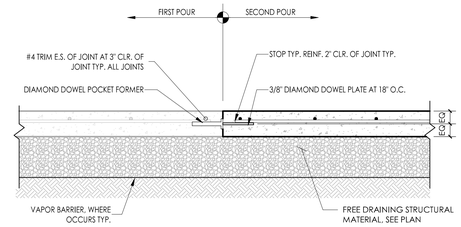

CONSTRUCTION JOINT (C.J.)

1 SLAB ON GRADE CONSTRUCTION JOINT (C.J.)
1" = 1'-0"

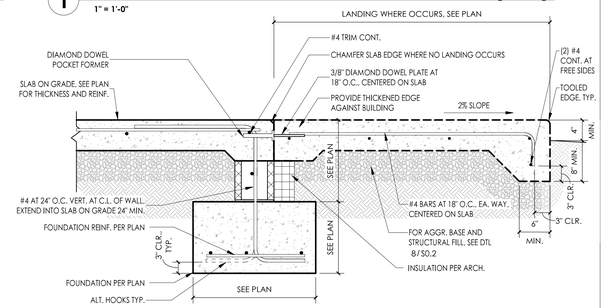

2 CMU WALL AT DOOR
1" = 1'-0"

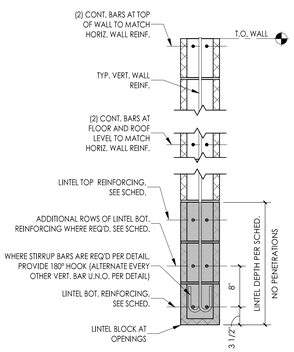

TYP. CMU LINTEL SCHEDULE					
MARK	CMU SIZE	DEPTH	BOT. REINFORCING (HORIZ.)	TOP REINFORCING (HORIZ.)	STIRRUPS
L1	8"	16"	(2) #5 BARS		N/A
L2	8"	32"	(4) #5 BARS IN (2) LAYERS		N/A
L3	12"	32"	(2) #6 BARS		N/A
L4	12"	32"	(2) #6 BARS IN (2) LAYERS	(2) #5 BARS	#4 AT 8" O.C.

NOTES:
1. SEE PLAN, WALL ELEVATIONS AND SPECIFIC DETAILS FOR ADDITIONAL REINFORCEMENT INFORMATION.
2. EXTEND BARS FROM FLOOR TO FLOOR OR FLOOR TO ROOF WHERE OPENING WIDTH EXCEEDS 2' - 0".

13 CMU LINTEL DETAIL
1" = 1'-0"

NOTE:
SEE PLAN, ELEVATIONS, LINTEL SCHEDULE, AND JAMB SCHEDULE FOR SIZE AND REINFORCING REQUIRED.

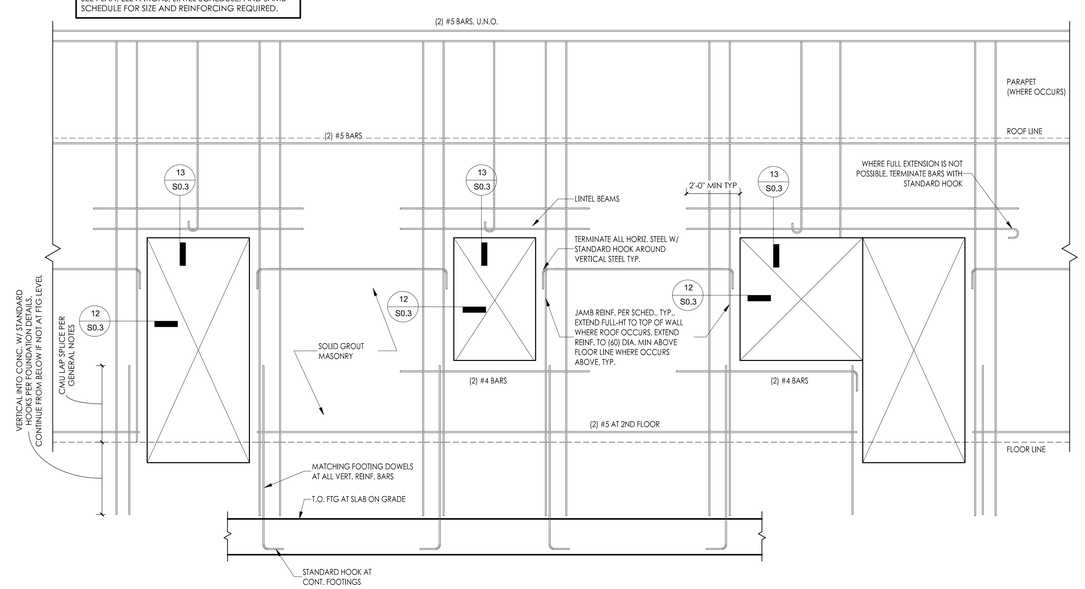

10 TYP. CMU WALL REINFORCING
1/2" = 1'-0"

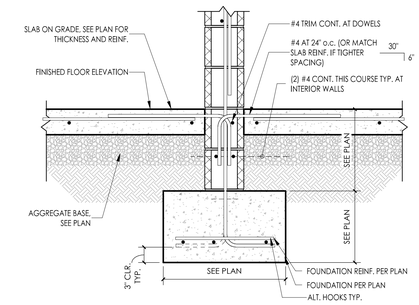

3 CMU TYPICAL INT. WALL SECTION
1" = 1'-0"

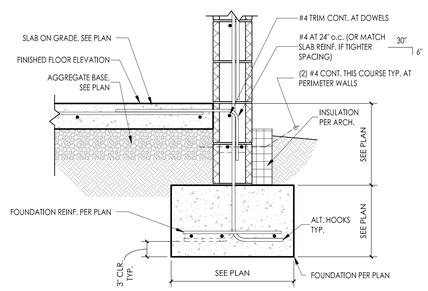

4 CMU TYPICAL WALL SECTION
1" = 1'-0"

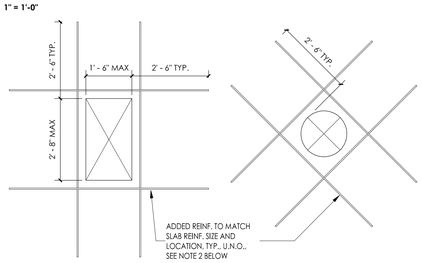

NOTES:
1. ADDED TRIM BARS ARE NOT REQUIRED IF THE HOLE DIAMETER IS LESS THAN 10" AND THE TYPICAL SLAB REINFORCING IS NOT INTERRUPTED.
2. REINFORCING STEEL EXTENSION SHALL BE 1.3 LD MIN. FOR #5 AND LARGER BARS.

14 SLAB OPENING TRIM REINFORCEMENT
1/2" = 1'-0"

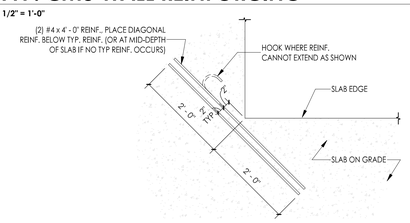

NOTES:
1. RE-ENTRANT 90 DEG. CORNER SUCH AS:
   A. OPENING IN SLAB
   B. AT WALL OR GRADE BEAM CORNERS
   C. ISOLATED EQUIPMENT BASE
2. REINFORCING PER THIS DETAIL SHALL BE INSTALLED AT ALL RE-ENTRANT CORNERS IN SLABS ON GRADE UNLESS SPECIFICALLY NOTED OTHERWISE.
3. REINFORCING PER THIS DETAIL DOES NOT OCCUR AT LOCATIONS WHERE SLAB JOINTS DIE INTO THE RE-ENTRANT CORNER.

11 REINF. AT RE-ENTRANT SLAB CORNERS
3/4" = 1'-0"

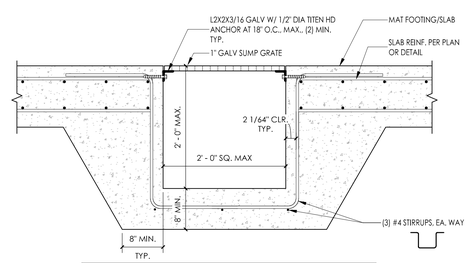

NOTES:
1. CONTRACTOR TO COORDINATE SUMP PIT LOCATION AND SIZE.
2. FOR CORNER REINFORCING AT SUMP CORNERS, SEE 11/S0.3.

8 SUMP SECTION
1" = 1'-0"

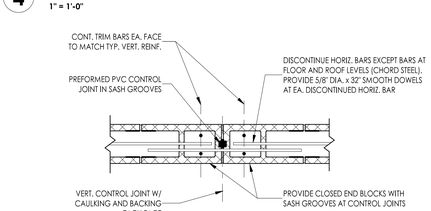

NOTES:
1. PROVIDE CONTROL JOINTS AT 40' - 0" MAX. AT ALL INTERIOR, EXTERIOR, AND SITE WALLS WHERE NOT OTHERWISE SHOWN ON PLANS.
2. REFER TO WALL ELEVATIONS FOR CONTROL JOINT LOCATIONS AND COORDINATE EXACT JOINT LOCATIONS TO WORK WITH JOINTS IN ARCHITECTURAL FINISHES.

5 CMU TYP. WALL CONTROL JOINT
1" = 1'-0"

tsk
225 South Arlington Avenue,
Suite A
Reno NV, 89501
phone: 775.857.2949
fax: 775.857.2403
www.tska.com

THESE DRAWINGS AND SPECIFICATIONS ARE THE PROPERTY OF TATE SNYDER KIMSEY ARCHITECTS AND MAY NOT BE REPRODUCED OR USED FOR ANY PURPOSE WITHOUT THE ARCHITECTS WRITTEN CONSENT. AS INSTRUMENTS OF SERVICE, THESE DOCUMENTS ARE NOT FINAL AND READY FOR USE, AND THEREFORE NOT VALID, UNLESS THEY ARE SEALED, SIGNED AND DATED.

Copyright, Ltd 2023

Consultant

NELSON WILCOX
STRUCTURAL ENGINEERS
225 S. Arlington Ave, Ste B
Reno, Nevada 89501
(775)-848-3166
(702)-290-5760

NWSE Project No: 20220057

PLEASE RECYCLE

Project
SPARKS Fire Station #6

6963 SCHEIDBAR ROAD, SPARKS NEVADA 89436

Job No: 22-043

Owner
CITY OF SPARKS

BID SET

REVISIONS		
REV	DATE	DESCRIPTION
A	05.18.23	Review Comments

Sheet Title
TYP. CONC. & CMU DETAILS

Date: 01/04/2024
Sheet No:
S0.3

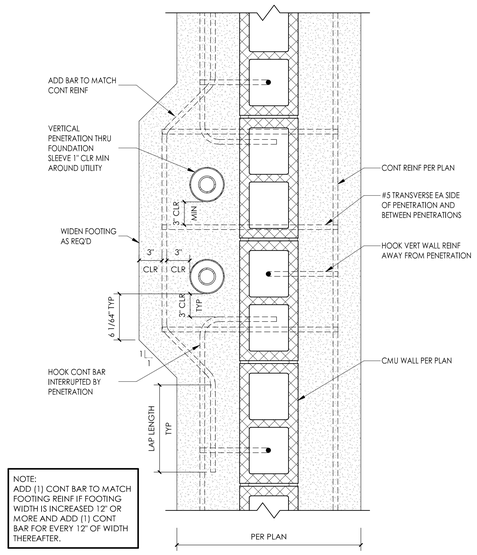

NOTE:
ADD (1) CONT BAR TO MATCH FOOTING REINF IF FOOTING WIDTH IS INCREASED 12" OR MORE AND ADD (1) CONT BAR FOR EVERY 12" OF WIDTH THEREAFTER.

8 TYP. VERT. PENETRATION AT WALL FOOTING
1 1/2" = 1'-0"

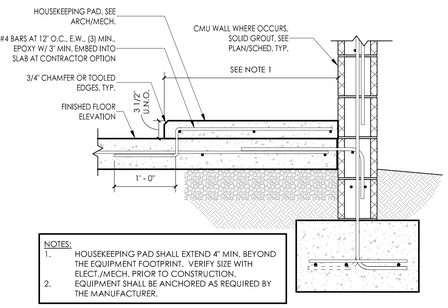

NOTES:
1. HOUSEKEEPING PAD SHALL EXTEND 4" MIN. BEYOND THE EQUIPMENT FOOTPRINT. VERIFY SIZE WITH ELECT./MECH. PRIOR TO CONSTRUCTION.
2. EQUIPMENT SHALL BE ANCHORED AS REQUIRED BY THE MANUFACTURER.

6 TYP. HOUSEKEEPING PAD
1" = 1'-0"

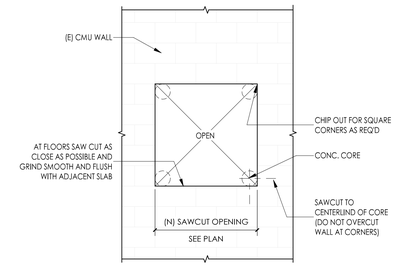

1 CMU TYP. SAW CUT OPENING
1/2" = 1'-0"

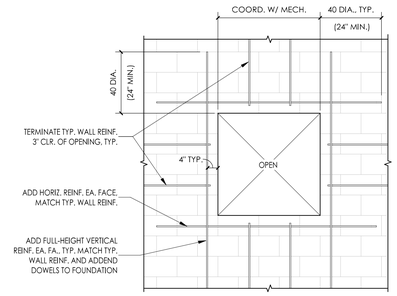

2 CMU LOUVER OPENING REINF.
1/2" = 1'-0"

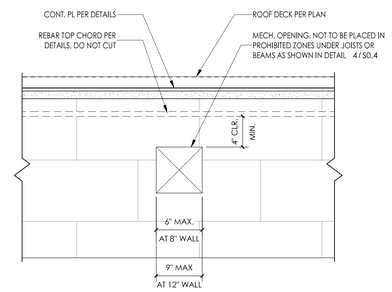

7 TYP. PENETRATION DIRECTLY UNDER ROOF DECK
1 1/2" = 1'-0"

IN ALL CASES, THE WALL REINFORCEMENT MUST TAKE PRECEDENCE OVER THE LOCATION OF THE CONDUITS, AND ADEQUATE ROOM IN THE CMU CELLS NEED TO BE MAINTAINED TO ALLOW FOR THE GROUT TO FLOW PROPERLY.

IN GENERAL, THE FOLLOWING NOTES NEED TO BE FOLLOWED:

1. NO VERTICAL ELECTRICAL CONDUIT IS TO BE PLACED IN THE FIRST 8" OF WALL JAMB AT THE WALL OPENINGS, WHICH SHALL BE RESERVED FOR JAMB REINFORCEMENT ONLY. PLACE VERT. CONDUIT IN NEXT ADJACENT CELL.
2. WHERE POSSIBLE, VERT. CONDUIT WILL BE PLACED IN NON-REINFORCED CELLS.
3. NO MORE THAN ONE 3/4" DIA. VERT. CONDUIT WILL BE PLACED IN A REINFORCED CELL AND:
   A. THE CONDUIT IS TO BE LOCATED SUCH THAT GROUT WILL BE ABLE TO FLOW COMPLETELY AROUND THE REINFORCING BARS.
   B. NO MORE THAN TWO 3/4" DIA. VERT. CONDUITS WILL BE PLACED IN A NON-REINFORCED CELL, UNLESS OTHER STRUCTURAL PROVISIONS ARE MADE.
4. IN HORIZONTAL BOND BEAMS, THE REBAR IS TO TAKE PRECEDENCE WHEREVER POSSIBLE. THE MASON SHALL PROVIDE ADDITIONAL ROWS OF BOND BEAM UNITS FOR HORIZONTAL CONDUITS TO RUN. IN NO CASE SHALL HORIZONTAL CONDUIT BE PLACED IN A BOND BEAM HAVING TWO HORIZ. BARS. ONLY IN CASES WHERE NO ALTERNATIVE IS AVAILABLE SHALL ONE CONDUIT BE PLACED IN THE SAME BOND BEAM AS ONE HORIZ. REBAR. NO MORE THAN TWO 3/4" DIA. MAX. SIZE CONDUITS BE PLACED IN A SINGLE BOND BEAM, PROVIDED THAT THERE IS NO HORIZ. REBAR IN BOND BEAM.

3 CONDUIT IN CMU
1" = 1'-0"

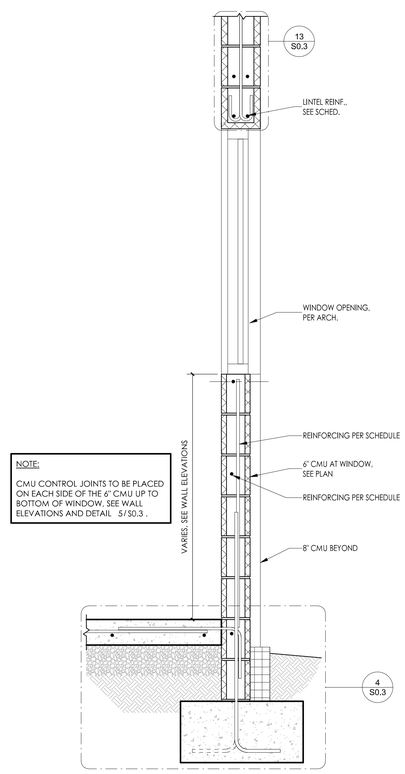

NOTE:
CMU CONTROL JOINTS TO BE PLACED ON EACH SIDE OF THE 6" CMU UP TO BOTTOM OF WINDOW. SEE WALL ELEVATIONS AND DETAIL 5/S0.3 .

9 W3 - 6" CMU AT WINDOW REVEAL
1" = 1'-0"

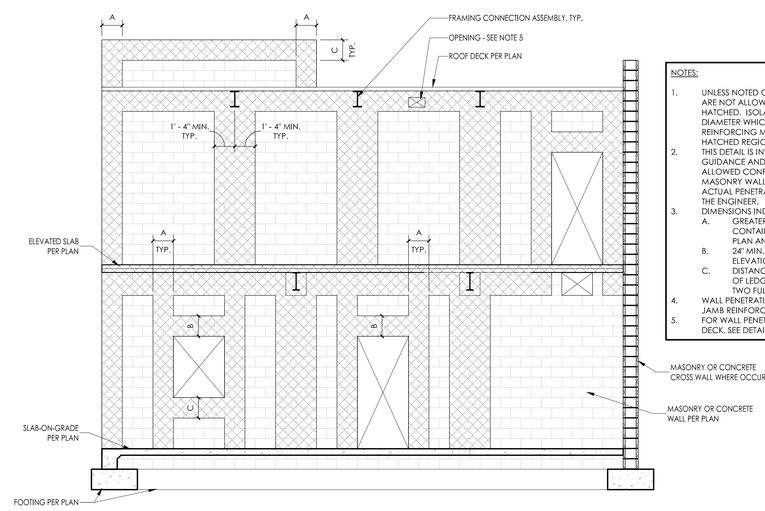

NOTES:
1. UNLESS NOTED OTHERWISE, WALL PENETRATIONS ARE NOT ALLOWED IN REGIONS SHOWN CROSS HATCHED. ISOLATED PENETRATIONS UP TO 1" IN DIAMETER WHICH DO NOT INTERFERE WITH REINFORCING MAY BE PLACED IN THE CROSS-HATCHED REGIONS.
2. THIS DETAIL IS INTENDED TO PROVIDE GENERAL GUIDANCE AND DOES NOT ADDRESS EVERY ALLOWED CONFIGURATION OR RESTRICTION. THE MASONRY WALL SHOP DRAWINGS SHALL SHOW ACTUAL PENETRATION LOCATIONS FOR REVIEW BY THE ENGINEER.
3. DIMENSIONS INDICATED ARE AS FOLLOWS:
   A. GREATER OF 16" OR WIDTH OF CELLS CONTAINING JAMB REINFORCING PER PLAN AND SCHEDULE.
   B. 24" MIN. UNLESS OTHERWISE NOTED IN ELEVATIONS/DETAILS.
   C. DISTANCE FROM TOP OF WALL / BOTTOM OF LEDGER TO THE BOTTOM OF THE FIRST TWO FULL COURSES OF MASONRY.
4. WALL PENETRATIONS SHALL HAVE LINTEL, SILL AND JAMB REINFORCING PER TYP. DETAILS.
5. FOR WALL PENETRATIONS DIRECTLY UNDER ROOF DECK, SEE DETAIL 7/S0.4 .

4 TYP. PROHIBITED MASONRY AND CONC. WALL PENETRATION LOCATIONS
1/4" = 1'-0"

tsk
225 South Arlington Avenue, Suite A
Reno NV, 89501
phone: 775.857.2949
fax: 775.857.2403
www.tska.com

PROFESSIONAL ENGINEER - STATE OF NEVADA
BOISE, ID
ROBERT KYLE WILCOX
Exp: 6-30-24
CIVIL/STRUCTURAL
No. 19779
01/04/2024

THESE DRAWINGS AND SPECIFICATIONS ARE THE PROPERTY OF TATE SNYDER KIMSEY ARCHITECTS AND MAY NOT BE REPRODUCED OR USED FOR ANY PURPOSE WITHOUT THE ARCHITECTS WRITTEN CONSENT. AS INSTRUMENTS OF SERVICE, THESE DOCUMENTS ARE NOT FINAL AND READY FOR USE, AND THEREFORE NOT VALID, UNLESS THEY ARE SEALED, SIGNED AND DATED.

Copyright, Ltd 2023

Consultant

NELSON WILCOX
STRUCTURAL ENGINEERS
225 S. Arlington Ave, Ste B (775)-848-3166
Reno, Nevada 89501 (702)-290-5760

NWSE Project No: 20220057

PLEASE RECYCLE

Project
SPARKS Fire Station #6

6963 SCHEIDBAR ROAD, SPARKS NEVADA 89436

Job No: 22-043

Owner
CITY OF SPARKS

CITY OF SPARKS FIRE DEPARTMENT Est. 1905

BID SET

REVISIONS		
REV	DATE	DESCRIPTION

Sheet Title
TYP. MASONRY DETAILS

Date: 01/04/2024
Sheet No:
S0.4

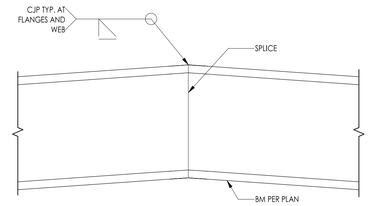

4 BEAM BEND DETAIL

1 1/2" = 1'-0"

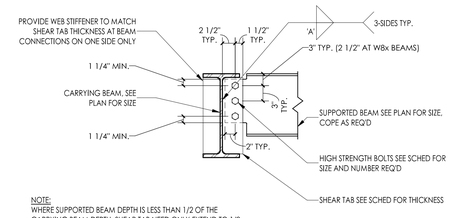

NOTE:
WHERE SUPPORTED BEAM DEPTH IS LESS THAN 1/2 OF THE CARRYING BEAM DEPTH, SHEAR TAB NEED ONLY EXTEND TO 1/2 THE DEPTH OF THE CARRYING BEAM, FULL HEIGHT WEB STIFFENER STILL REQUIRED AT CONNECTIONS ON ONE SIDE ONLY.

BEAM CONNECTION SCHEDULE								
SHEAR PL. CONNECTION								
SUPPORTED BEAM DEPTH	BOLTS			PL. THK.	WELD SIZE 'A'	CAPACITY		
	#	DIA	TYPE			ASD (KIPS)	LRFD (KIPS)	t_w MIN [1]
W8x - W10x	2	3/4"	A325N	1/4"	3/16"	16.3	24.5	3/8"
W12x - W14x	3	3/4"	A325N	1/4"	3/16"	25.6	38.3	5/16"
W16x	4	3/4"	A325N	1/4"	3/16"	34.8	52.2	5/16"
W18x	5	3/4"	A325N	3/8"	5/16"	54.5	82.0	3/8"
W21x	6	3/4"	A325N	3/8"	5/16"	66.8	100	-
W24x	7	3/4"	A325N	3/8"	5/16"	78.8	119	-
W27x - W30x	8	3/4"	A325N	3/8"	5/16"	90.9	137	-
W33x	9	3/4"	A325N	3/8"	5/16"	103	155	-
W36x	10	3/4"	A325N	3/8"	5/16"	115	172	-
W40x	11	3/4"	A325N	3/8"	5/16"	137	206	-
W44x	12	3/4"	A325N	3/8"	5/16"	138	208	-

1. LISTED CONNECTION CAPACITY APPLIES TO BEAMS WITH A WEB THICKNESS EQUAL TO OR GREATER THAN THE MININUM WEB THICKNESS (t_w) LISTED IN SCHEDULE.

1 STEEL TYP. BEAM TO BEAM SHEAR TAB

1" = 1'-0"

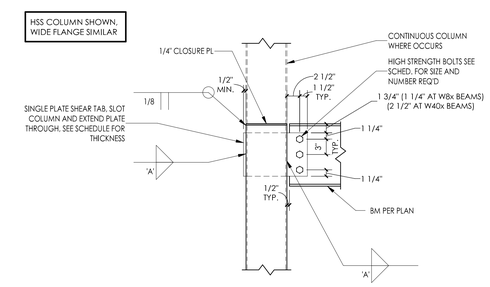

NOTE:
WHERE BEAMS FRAME PERPENDICULAR, SLOT AND EXTEND THROUGH HEAVIEST LOADED TAB.

BEAM CONNECTION SCHEDULE								
SHEAR PL. CONNECTION								
SUPPORTED BEAM DEPTH	BOLTS			PL. THK.	WELD SIZE 'A'	CAPACITY		
	#	DIA	TYPE			ASD (KIPS)	LRFD (KIPS)	t_w MIN [1]
W8x - W10x	2	3/4"	A325N	1/4"	3/16"	16.3	24.5	3/8"
W12x - W14x	3	3/4"	A325N	1/4"	3/16"	25.6	38.3	5/16"
W16x	4	3/4"	A325N	1/4"	3/16"	34.8	52.2	5/16"
W18x	5	3/4"	A325N	3/8"	5/16"	54.5	82.0	3/8"
W21x	6	3/4"	A325N	3/8"	5/16"	66.8	100	-
W24x	7	3/4"	A325N	3/8"	5/16"	78.8	119	-
W27x - W30x	8	3/4"	A325N	3/8"	5/16"	90.9	137	-
W33x	9	3/4"	A325N	3/8"	5/16"	103	155	-
W36x	10	3/4"	A325N	3/8"	5/16"	115	172	-
W40x	11	3/4"	A325N	3/8"	5/16"	137	206	-
W44x	12	3/4"	A325N	3/8"	5/16"	138	208	-

1. LISTED CONNECTION CAPACITY APPLIES TO BEAMS WITH A WEB THICKNESS EQUAL TO OR GREATER THAN THE MININUM WEB THICKNESS (t_w) LISTED IN SCHEDULE.

2 STEEL TYP. BEAM TO COL CONNECTION

1" = 1'-0"

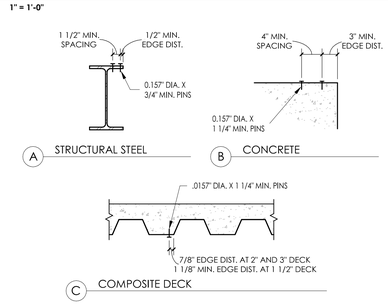

3 TYP. SHOT PINS

1" = 1'-0"

tsk

225 South Arlington Avenue,
Suite A
Reno NV, 89501
phone: 775.857.2949
fax: 775.857.2403
www.tska.com

PROFESSIONAL ENGINEER - STATE OF NEVADA
BOISE
ROBERT KYLE WILCOX
Exp: 6-30-24
CIVIL/STRUCTURAL
No. 19779
01/04/2024

THESE DRAWINGS AND SPECIFICATIONS ARE THE PROPERTY OF TATE SNYDER KIMSEY ARCHITECTS AND MAY NOT BE REPRODUCED OR USED FOR ANY PURPOSE WITHOUT THE ARCHITECTS WRITTEN CONSENT. AS INSTRUMENTS OF SERVICE, THESE DOCUMENTS ARE NOT FINAL AND READY FOR USE, AND THEREFORE NOT VALID, UNLESS THEY ARE SEALED, SIGNED AND DATED.

Copyright, Ltd 2023

Consultant

NELSON WILCOX
STRUCTURAL ENGINEERS
225 S. Arlington Ave, Ste B
Reno, Nevada 89501
(775)-848-3166
(702)-290-5760

NWSE Project No: 20220057

PLEASE RECYCLE

Project

SPARKS Fire Station #6

6963 SCHEIDBAR ROAD, SPARKS NEVADA 89436

Job No: 22-043

Owner

CITY OF SPARKS

BID SET

REVISIONS		
REV	DATE	DESCRIPTION
A	05.18.23	Review Comments

Sheet Title

TYP. STEEL DETAILS

Date: 01/04/2024

Sheet No:

S0.5

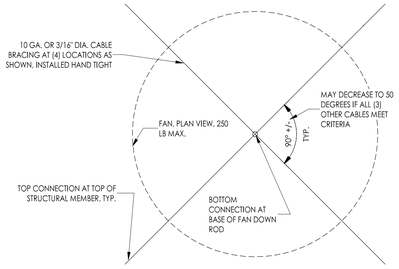

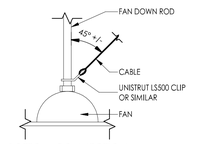

BOTTOM CONNECTION

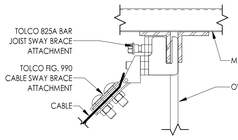

TOP CONNECTION

13 SUSPENDED FAN BRACING
1" = 1'-0"

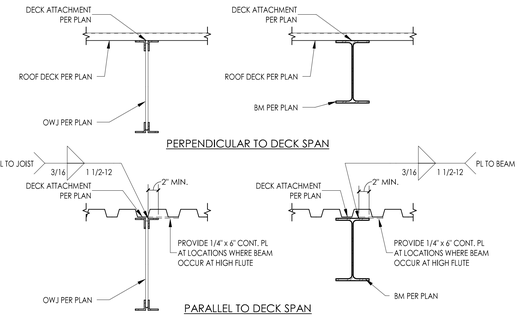

6 DECK TO BEAM DETAIL
1" = 1'-0"

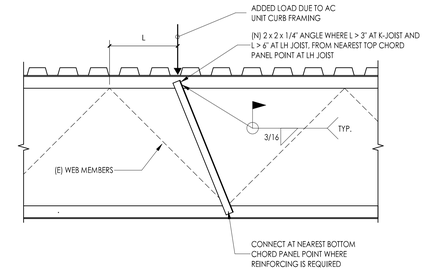

1 JOIST REINFORCING - TOP CHORD LOAD
1" = 1'-0"

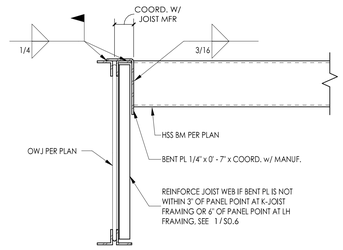

14 TYP. HSS TO ROOF JOIST
1 1/2" = 1'-0"

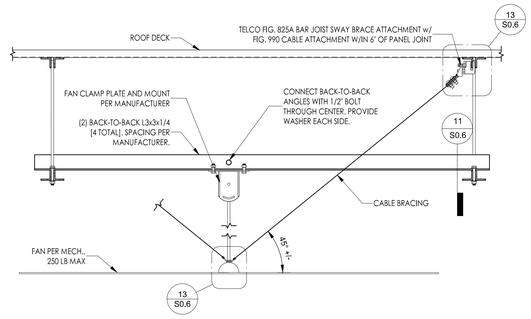

10 FAN MOUNT AT OWJ
1" = 1'-0"

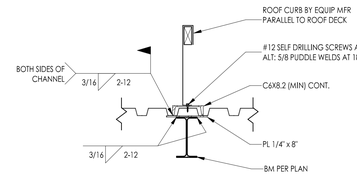

PERPENDICULAR TO JOIST

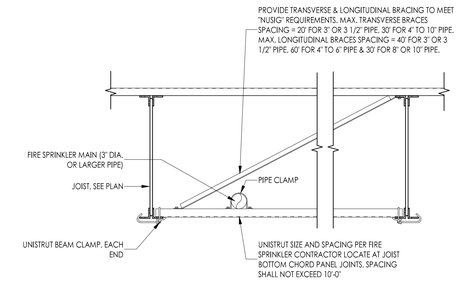

2 JOIST REINFORCING - BOT. CHORD LOAD
1" = 1'-0"

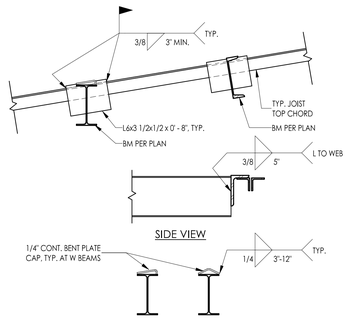

15 CROSS PIECE
1" = 1'-0"

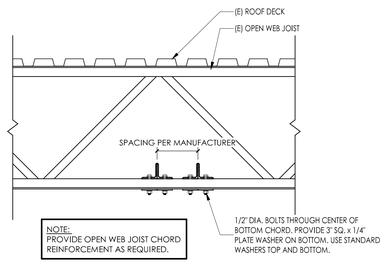

NOTE:
PROVIDE OPEN WEB JOIST CHORD REINFORCEMENT AS REQUIRED.

11 FAN MOUNT ANGLES TO CHORD CONN.
1" = 1'-0"

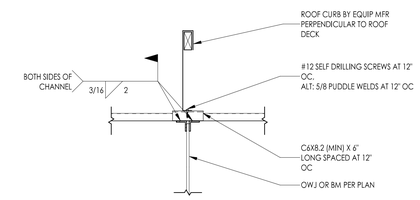

PARALLEL TO JOIST

7 CURB TO ROOF DETAIL
1" = 1'-0"

4 FIRE LINE SUPPORT - PERP. TO JOISTS
1" = 1'-0"

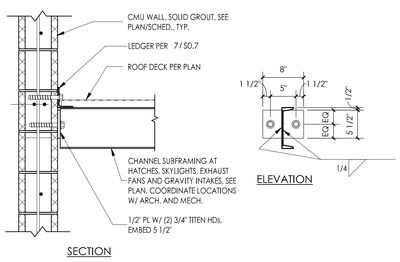

16 TYP. CHANNEL BM TO CMU
1" = 1'-0"

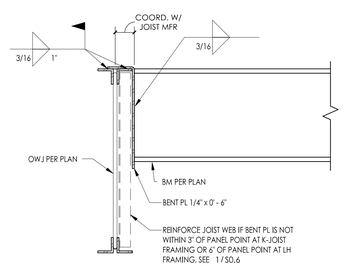

12 TYP. RAISED BM TO OWJ
1 1/2" = 1'-0"

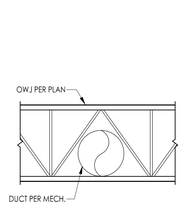

APPROXIMATE DUCT OPENING SIZES FOR "K" SERIES JOISTS			
JOIST DEPTH	DUCT PENETRATION		
	ROUND	SQUARE	RECTANGLE
10"	5"	4" x 4"	3" x 7"
12"	7"	5" x 5"	3" x 8"
14"	8"	6" x 6"	5" x 9"
16"	8"	6" x 6"	5" x 9"
18"	9"	7" x 7"	6" x 11"
20"	10"	8" x 8"	7" x 11"
22"	10"	9" x 9"	7" x 11"
24"	12"	10" x 10"	7" x 13"
26"	15"	12" x 12"	9" x 18"
28"	16"	13" x 13"	9" x 18"
30"	17"	14" x 14"	10" x 18"

NOTES:
1. WHERE DUCTS RUN THROUGH OWJS PROVIDE SPACE TO ACCOMODATE THE DUCT.
2. SEE MECH. FOR EXACT SIZE AND LOCATION OF DUCTS RUNNING THROUGH OWJS.
3. SHOP DRAWINGS SHALL SHOW SIZE OF DUCTS RUNNING THOUGH OWJS.

8 TYP. OWJ DUCT SPACE
1/2" = 1'-0"

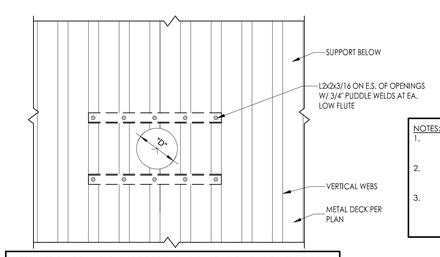

ALTERNATE: PLACE ANGLE ABOVE DECKING AND USE 1 1/2" LONG FILLET WELDS E.S. OF EA. HIGH FLUTE. COORDINATE AS REQ'D W/ ROOFING AND ARCH. DETAILS

SMALL OPENINGS

NOTES:
1. NO REINFORCEMENT REQUIRED FOR OPENINGS NOT CUTTING WEB OF FLUTE.
2. FOR OPENINGS CUTTING TWO WEBS OF FLUTE, REINF. AS SHOWN ON THE LEFT.
3. FOR OPENINGS CUTTING MORE THAN TWO WEBS PROVIDE FRAMING AS SHOWN ON THE RIGHT.

9 TYP. ROOF DECK PENETRATION REINFORCING
1" = 1'-0"

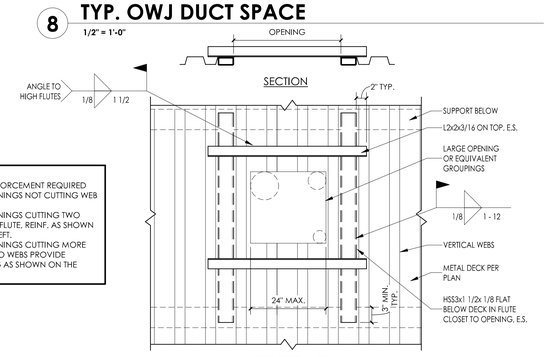

LARGE OPENINGS

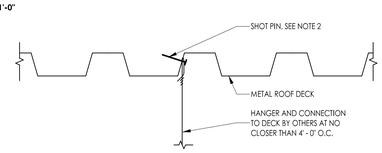

ACOUSTIC TILE CEILING OR LIGHT FIXTURE <56 LBS SUPPORT

NOTES:
1. ONLY ACOUSTIC TILE CEILINGS OR LIGHT FIXTURES WEIGHING < 56 LBS. MAY BE SUSPENDED DIRECTLY FROM METAL ROOF DECK. IF ALTERNATE SUPPORT SYSTEMS FOR SUSPENDED ITEMS ARE DESIRED, THE CONTRACTOR SHALL SUBMIT SHOP DRAWINGS TO THE ARCHITECT FOR APPROVAL. ALTERNATE SUPPORT SYSTEMS SHALL UTILIZE STEEL FRAMING AND SHALL NOT RELY ON METAL DECK FOR SUPPORT.
2. HILTI X-U 19, 0.157" DIA. x 3/4". SHOT PINS MAY BE USED WHERE MAX. LOAD IS 20 LBS PER SHOT PIN. A MINIMUM OF (4) SHOT PINS ARE REQ'D. TO SUPPORT A 56 LBS FIXTURE.

5 TYP. SUSPENSION FROM METAL ROOF DECK
3" = 1'-0"

tsk
225 South Arlington Avenue,
Suite A
Reno NV, 89501
phone: 775.857.2949
fax: 775.857.2403
www.tska.com

PROFESSIONAL ENGINEER - STATE OF NEVADA
BOISE
ROBERT KYLE WILCOX
Exp: 6-30-24
CIVIL/STRUCTURAL
No. 19779
01/04/2024

THESE DRAWINGS AND SPECIFICATIONS ARE THE PROPERTY OF TATE SNYDER KIMSEY ARCHITECTS AND MAY NOT BE REPRODUCED OR USED FOR ANY PURPOSE WITHOUT THE ARCHITECTS WRITTEN CONSENT. AS INSTRUMENTS OF SERVICE, THESE DOCUMENTS ARE NOT FINAL AND READY FOR USE, AND THEREFORE NOT VALID, UNLESS THEY ARE SEALED, SIGNED AND DATED.

Copyright, Ltd 2023

Consultant

NELSON WILCOX
STRUCTURAL ENGINEERS
225 S. Arlington Ave, Ste B
Reno, Nevada 89501
(775)-848-3166
(702)-290-5760

NWSE Project No: 20220057

PLEASE RECYCLE

Project
SPARKS Fire Station #6

6963 SCHEIDBAR ROAD, SPARKS NEVADA 89436

Job No: 22-043

Owner
CITY OF SPARKS

BID SET

REVISIONS		
REV	DATE	DESCRIPTION

Sheet Title
TYP. ROOF FRAMING DETAILS

Date: 01/04/2024
Sheet No:
S0.6

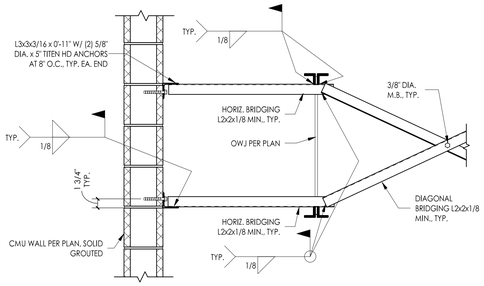

15 TYP. OWJ DIAGONAL BRIDGING
1" = 1'-0"

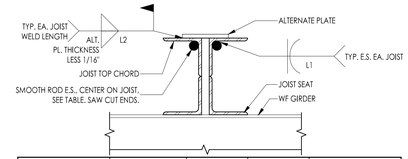

JOIST AXIAL FORCE PER PLAN (ASD)	SMOOTH ROD SIZE	WELD L1	WELD L2	ALTERNATE PLATE SIZE
0k - 2k	NOT REQ'D	-	-	-
2.1k - 10k	1/2" DIA.	3"	3"	3/16 x 3"
10.1k - 25k	3/4" DIA.	4"	4"	1/4 x 3"
25.1k - 35k	1" DIA.	5"	4"	5/16 x 3"
35.1k - 45k	1" DIA.	6"	5"	5/16 x 4"
45.1k - 60k	1 1/4" DIA.	6"	5"	3/8 x 4.5"
60.1k - 75k	1 3/8" DIA.	7"	5"	1/2 x 4.5"

NOTE:
1. IF JOIST AXIAL FORCE IS LESS THAN 2k, JOIST MANUFACTURER SHALL DESIGN JOIST SEAT TO TRANSFER AXIAL FORCE, INCLUDING EFFECT OF ECCENTRICITY.
2. IF AXIAL FORCES IN JOISTS VARY ON OPPOSITE SIDES OF JOINT, TIES SHALL BE DESIGNED FOR SMALLER AXIAL FORCE.

10 JOIST TIE
3" = 1'-0"

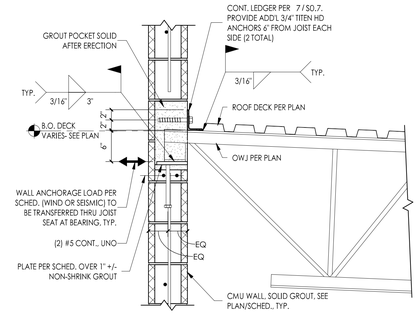

5 TYP. POCKETED JOIST IN CMU (6" SEAT, HIGH)
1" = 1'-0"

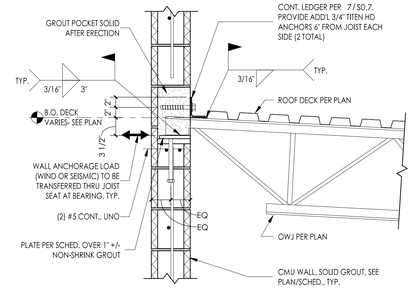

1 TYP. POCKETED JOIST IN CMU (HIGH SIDE)
1" = 1'-0"

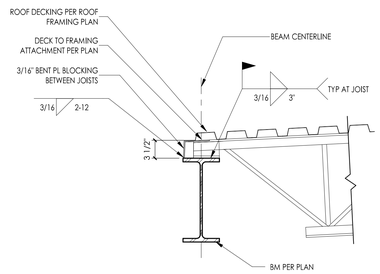

16 ROOF K JOIST AT GIRDER
1" = 1'-0"

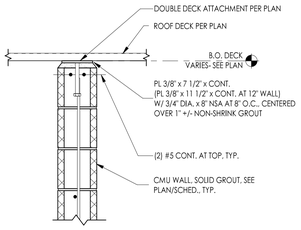

NOTE:
DECK IS NOT CONTINUOUS AT SIM. CONDITION.

11 ROOF DECK CONN. TO INT. CMU WALL
1" = 1'-0"

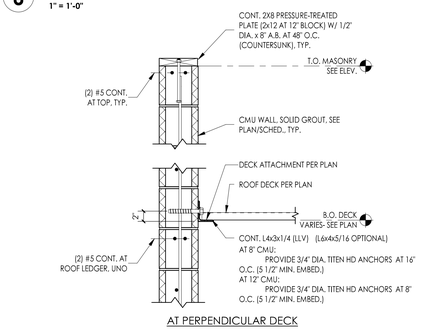

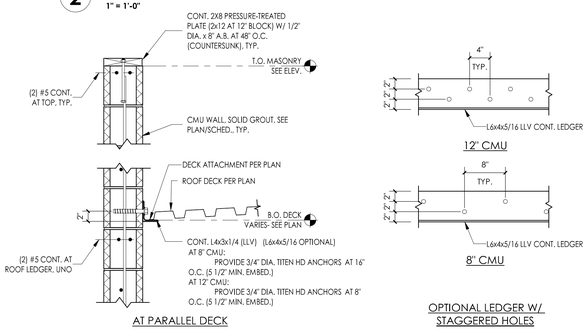

7 CMU EXTERIOR WALL LEDGER CONN.
1" = 1'-0"

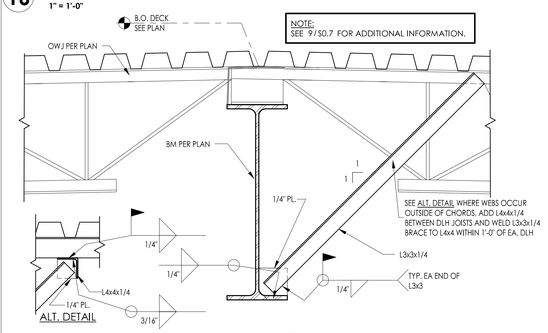

17 W40 BEAM BRACING DETAIL
1" = 1'-0"

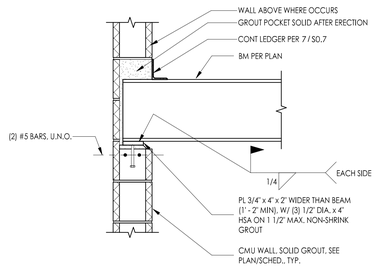

12 WF BEAM SEATED CONN. AT CMU
1" = 1'-0"

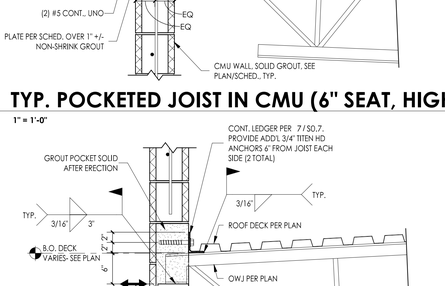

8 TYP. ROOF DECK AT TOP OF WALL
1" = 1'-0"

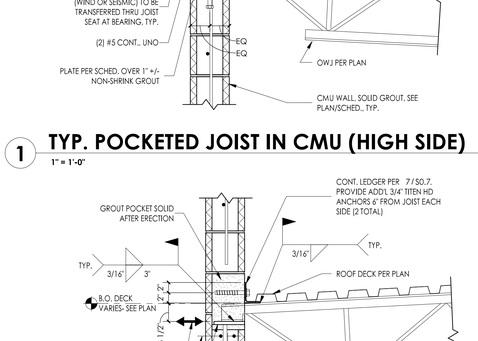

3 CMU TYP JOIST TO TOP OF WALL (7.5" SEAT)
1" = 1'-0"

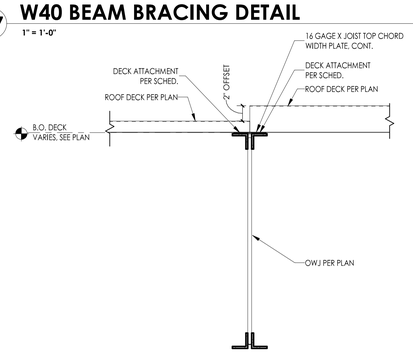

18 DECK JOINT PARALLEL TO JOIST
1 1/2" = 1'-0"

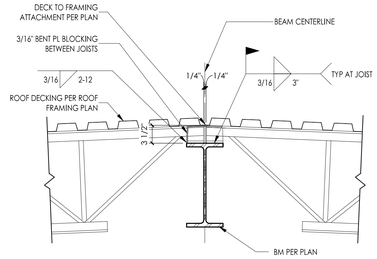

13 ROOF K JOIST AT GIRDER
1" = 1'-0"

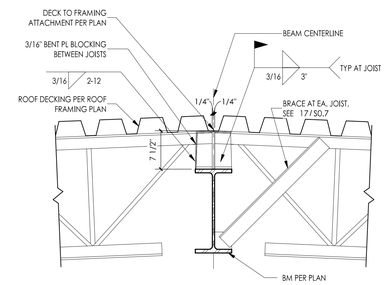

9 ROOF LH JOIST AT GIRDER
1" = 1'-0"

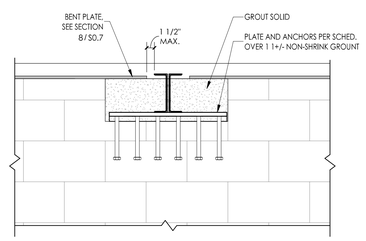

4 CMU - JOIST TO T.O. WALL ELEV.
1" = 1'-0"

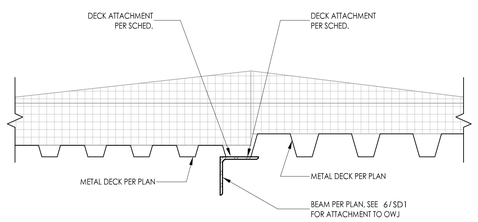

19 DECK JOINT PERPENDICULAR TO JOIST
1 1/2" = 1'-0"

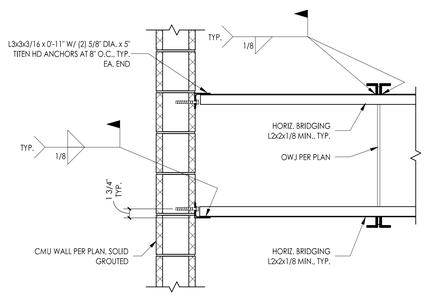

14 TYP. OWJ HORIZ BRIDGING
1" = 1'-0"

tsk
225 South Arlington Avenue,
Suite A
Reno NV, 89501
phone: 775.857.2949
fax: 775.857.2403
www.tska.com

PROFESSIONAL ENGINEER - STATE OF NEVADA
BOISE
ROBERT KYLE WILCOX
Exp: 6-30-24
CIVIL/STRUCTURAL
No. 19779
01/04/2024

THESE DRAWINGS AND SPECIFICATIONS ARE THE PROPERTY OF TATE SNYDER KIMSEY ARCHITECTS AND MAY NOT BE REPRODUCED OR USED FOR ANY PURPOSE WITHOUT THE ARCHITECTS WRITTEN CONSENT. AS INSTRUMENTS OF SERVICE, THESE DOCUMENTS ARE NOT FINAL AND READY FOR USE, AND THEREFORE NOT VALID, UNLESS THEY ARE SEALED, SIGNED AND DATED.

Copyright, Ltd 2023

Consultant

NELSON WILCOX
STRUCTURAL ENGINEERS
225 S. Arlington Ave, Ste B
Reno, Nevada 89501
(775)-848-3166
(702)-290-5760

NWSE Project No: 20220057

PLEASE RECYCLE

Project
SPARKS Fire Station #6

6963 SCHEIDBAR ROAD, SPARKS NEVADA 89436

Job No: 22-043

Owner
CITY OF SPARKS

BID SET

REVISIONS

REV	DATE	DESCRIPTION
A	05.18.23	Review Comments
B	10.10.23	Revisions

Sheet Title
TYP. ROOF FRAMING DETAILS

Date: 01/04/2024
Sheet No:
S0.7

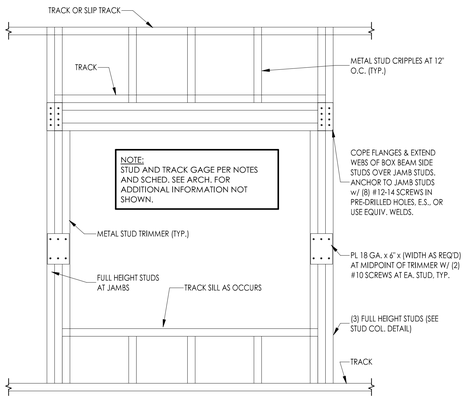

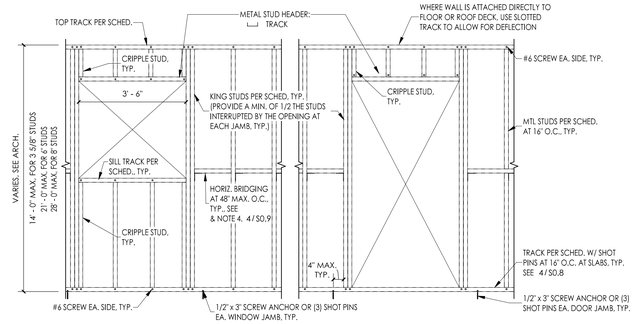

NOTES:
1. NON-STRUCTURAL STEEL PARTITION FRAMING SHALL BE PER ASTM C645 AND ASTM C754. AT CONTRACTORS OPTION STEEL FRAMING CONNECTIONS MAY BE MADE WITH SCREWS OR MATERIALS MAY BE UPSIZED TO 16 GA. MINIMUM TO ACCOMMODATE WELDS. CONTRACTOR IS TO PROVIDE SHOP DRAWINGS FOR OF ALL CONNECTIONS FOR APPROVAL BY THE STRUCTURAL ENGINEER BEFORE CONSTRUCTION.
2. SEE SHEET GENERAL NOTES AND SHEET S0.9 FOR ADDITIONAL CFS FRAMING INFORMATION AND DETAILS.
3. NON-BEARING. INTERIOR CFS WALL LOCATIONS AND HEIGHTS PER ARCH.
4. HORIZONTAL BRIDGING NOT REQUIRED WHEN WALL IS SHEATHED ON EACH SIDE.

METAL STUD WALL SCHEDULE

MARK	STUD SIZES			TRACK SIZES		
	TYPICAL[1]	KING[2]	CRIPPLE	BASE[3]	TOP	SILL/HDR
3 5/8"	362S137-33	(2) 362S137-33	362S137-33	362T125-33	362T125-33	362T125-33
6"	600S162-33	(2) 600S162-33	600S162-33	600T150-33	600T150-33	600T150-33
8"	800S162-43	(2) 800S162-43	800S162-43	800T150-43	800T150-43	800T150-43

NOTES:
1. SIZES SHOWN ARE TYPICAL, U.N.O.
2. TYPICAL STUD SPACING SHALL BE 16" O.C., MAX.
3. PROVIDE A MINIMUM OF 1/2 OF THE STUDS INTERRUPTED BY THE OPENINGS AT EACH JAMB, TYP.
4. PROVIDE 1/2" x 3" SCREW ANCHORS AT 32" O.C., TYP. AND WITHIN 4" OF ENDS. CORNERS AND JAMBS OR HILTI X-U POWDER ACTUATED FASTENERS AT 16" O.C. W/ MIN. 3/4" EMBED, TYP. AND (3) WITHIN 4" OF ENDS, CORNERS AND JAMBS.
5. SEE 3/S0.8 & 10/S0.8 FOR ADDITIONAL INFORMATION ON NON-BEARING DOOR AND WINDOW FRAMING.

7 TYP. INT. CFS NON-BEARING METAL STUD FRAMING (U.N.O.)
1/2" = 1'-0"

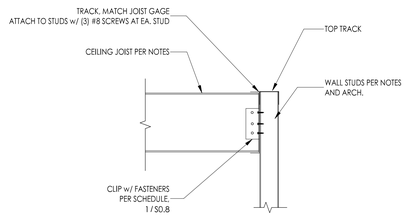

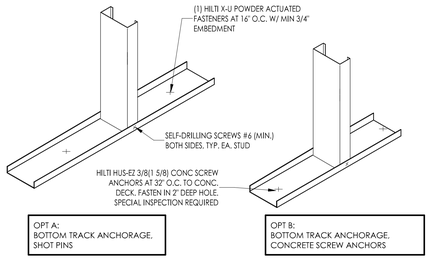

COLD-FORMED STEEL FRAMING NOTES

1. ALL INTERIOR CFS WALL STUD WIDTHS AND FINISHES PER ARCHITECTURAL. SEE GENERAL NOTES, SECTION I. FOR ADDITIONAL CFS REQUIREMENTS.
2. BEARING WALL FRAMING TO BE MINIMUM 362S 162-33 METAL STUDS AT 16" o.c. CONNECT 5/8" GYPSUM WALL BOARD TO EACH SIDE OF STUDS w/ #6 SCREWS AT 4" o.c. AT PANEL EDGES AND 12" o.c. IN THE FIELD.
3. BRACING (WHERE OCCURS) TO BE STUD OR TRACK. SPLICE BRACING AND TERMINATE ALL BRACING WITH END CONNECTION PER DETAILS.
4. STRUCTURAL FRAMING (JOISTS, BEARING WALLS, BRACING, CONNECTIONS ETC.) SHALL BE IN ACCORDANCE WITH THE GENERAL NOTES, SECTION I.
5. SEE 2/S0.8, FOR STANDARD STUD DESIGNATIONS. 600S162-43 FOR EXAMPLE IS A 6" DEEP, 1 5/8" FLANGE, 18 GA STUD.
6. CLIPS TO BE PER CEILING JOIST CLIP SCHEDULE BELOW.
7. CONTRACTOR TO SUSPEND CEILING EVENLY LOADED TO STUDS SPACED AT 24" o.c. WHERE APPLIES.
8. TYP. INTERIOR NON-BEARING WALL FRAMING PER 7/S0.8.
9. TYPICAL DOOR FRAMING PER 3/S0.8 OR 6/S0.8 AT BEARING CONDITION.
10. TYPICAL WINDOW FRAMING PER 10/S0.8 OR 13/S0.8 AT BEARING CONDITION.
11. TYPICAL BOTTOM TRACK ANCHORAGE PER 4/S0.8 TYP.
12. TYPICAL CEILING FRAMING PER 5/S0.8 OR 9/S0.8.

CEILING JOIST CLIP SCHEDULE

STUD SIZE	CLIP GA.	SCREW TYPE	SCREW # TO STUD AND TRACK
800S	16	#8	2
1000S	14	#8	3
1200S	14	#8	4
1400S	14	#8	5

11 STUD FRAMED OPENING DETAIL, L > 6'-0"
1" = 1'-0"

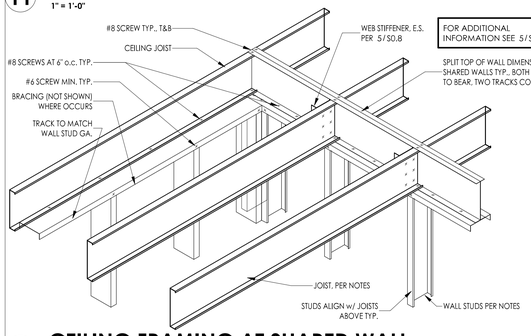

8 CEILING FRAMING - TRACK
1" = 1'-0"

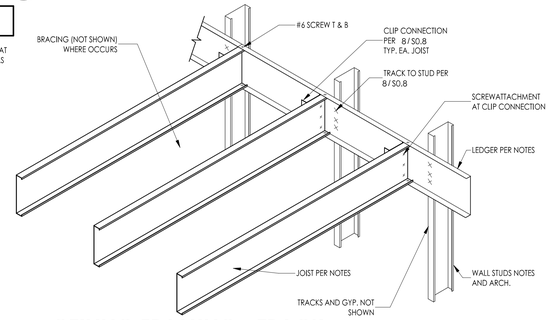

4 BOTTOM TRACK ANCHORAGE
1" = 1'-0"

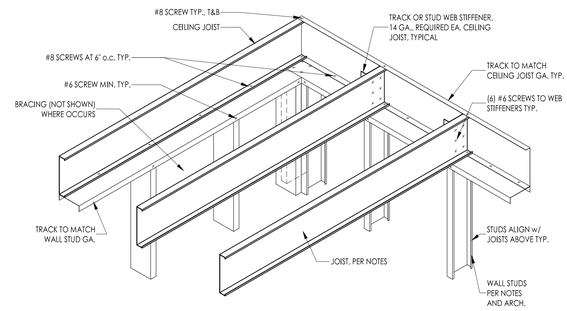

1 COLD-FORMED STEEL FRAMING NOTES
12" = 1'-0"

EXAMPLE: **800S162-54**
SIZE — THICKNESS — SHAPE — FLANGE WIDTH

SIZE	SHAPE	FLANGE WIDTH	THICKNESS	REMARKS
162 = 1 5/8"	S	125 = 1 1/4"	18 = 25 GA.	
250 = 2 1/2"	T	137 = 1 3/8"	27 = 22 GA.	
350 = 3 1/2"	U	162 = 1 5/8"	30 = 20 GA.	DRYWALL
400 = 4"	F	200 = 2"	33 = 20 GA.	STRUCTURAL
550 = 5 1/2"			43 = 18 GA.	
600 = 6"			54 = 16 GA.	
800 = 8"			68 = 14 GA.	
1000 = 10"			97 = 12 GA.	
1200 = 12"				
1400 = 14"				

NOTES:
1. SEE GENERAL NOTES, SECTION I FOR ADDITIONAL COLD-FORMED STEEL INFORMATION.
2. SECTION PROPERTIES OF ALL MEMBERS SHALL MEET OR EXCEED THOSE OF PRODUCTS MANUFACTURED IN ACCORDANCE WITH SSMA STANDARDS.

12 CEILING FRAMING AT SHARED WALL
1 1/2" = 1'-0"

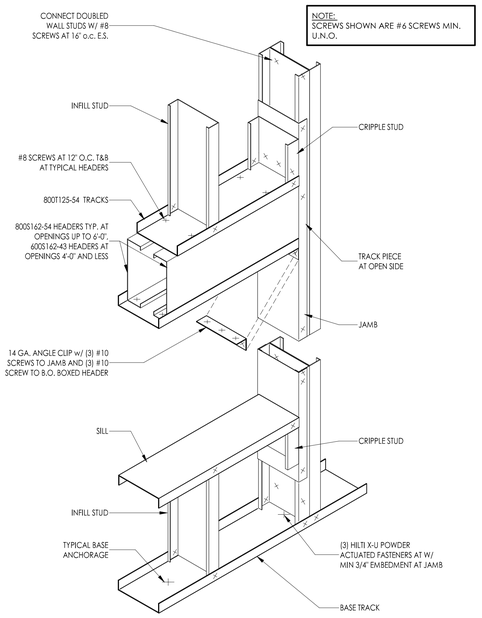

9 CEILING FRAMING - TRACK
1 1/2" = 1'-0"

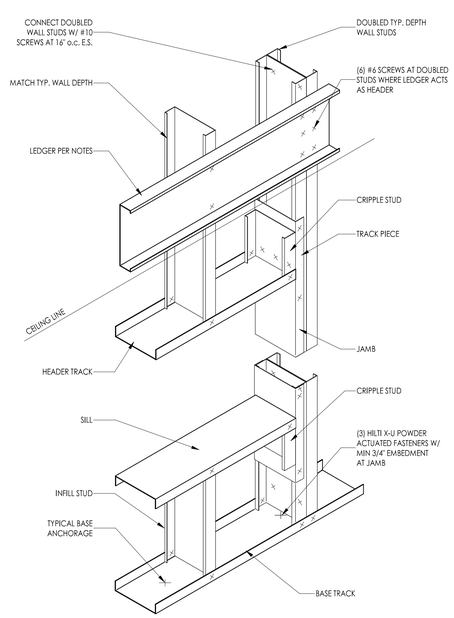

5 TYP. CEILING FRAMING
1 1/2" = 1'-0"

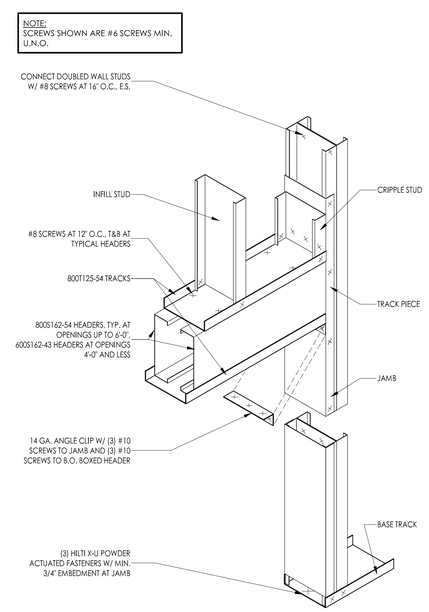

2 CFS - TYP. STEEL STUD FRAMING DESIGNATIONS
1/2" = 1'-0"

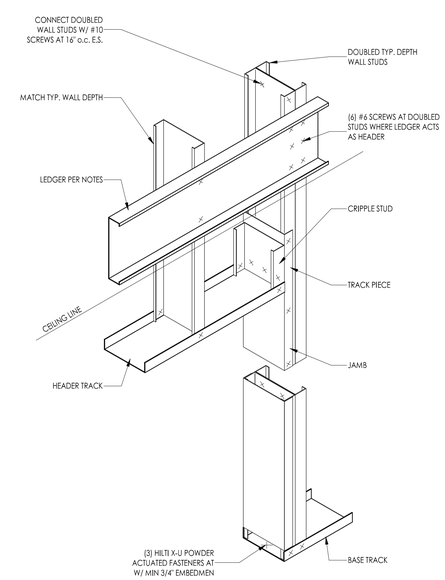

13 WINDOW HEADER - BEARING
1 1/2" = 1'-0"

10 WINDOW HEADER - NON-BEARING
1 1/2" = 1'-0"

6 DOOR HEADER - BEARING
1 1/2" = 1'-0"

3 DOOR HEADER - NON-BEARING
1 1/2" = 1'-0"

tsk
225 South Arlington Avenue, Suite A
Reno NV, 89501
phone: 775.857.2949
fax: 775.857.2403
www.tska.com

PROFESSIONAL ENGINEER - STATE OF NEVADA
ROBERT KYLE WILCOX
Exp: 6-30-24
CIVIL/STRUCTURAL
No. 19779
01/04/2024

THESE DRAWINGS AND SPECIFICATIONS ARE THE PROPERTY OF TATE SNYDER KIMSEY ARCHITECTS AND MAY NOT BE REPRODUCED OR USED FOR ANY PURPOSE WITHOUT THE ARCHITECTS WRITTEN CONSENT. AS INSTRUMENTS OF SERVICE, THESE DOCUMENTS ARE NOT FINAL AND READY FOR USE, AND THEREFORE NOT VALID, UNLESS THEY ARE SEALED, SIGNED AND DATED.
Copyright, Ltd 2023

Consultant

NELSON WILCOX
STRUCTURAL ENGINEERS
225 S. Arlington Ave, Ste B (775)-848-3166
Reno, Nevada 89501 (702)-290-5760
NWSE Project No: 20220057

PLEASE RECYCLE

Project
SPARKS Fire Station #6

6963 SCHEIDBAR ROAD, SPARKS NEVADA 89436

Job No: 22-043

Owner
CITY OF SPARKS

CITY OF SPARKS FIRE DEPARTMENT Est. 1905

BID SET

REVISIONS

REV	DATE	DESCRIPTION

Sheet Title
TYP. INTERIOR COLD-FORMED STEEL DETAILS

Date: 01/04/2024
Sheet No:
S0.8

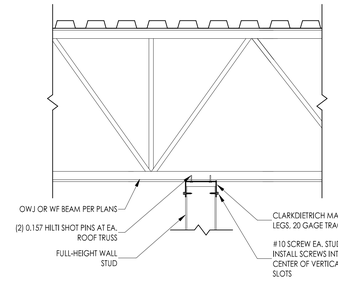

PERPENDICULAR TO JOISTS (OPTION 2)

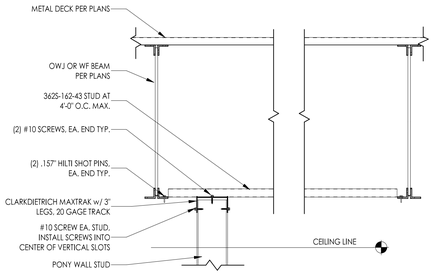

PARALLEL, BETWEEN JOISTS (OPTION 2)

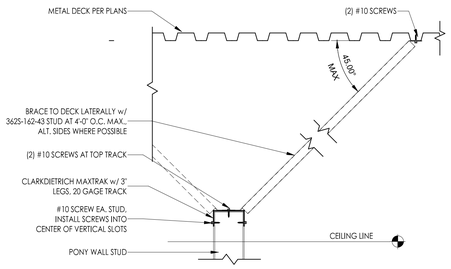

PERPENDICULAR TO JOISTS (OPTION 1)

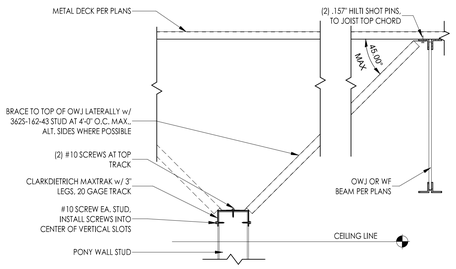

PARALLEL, BETWEEN JOISTS (OPTION 1)

5 INTERIOR PONY WALL BRACING TO ROOF

1" = 1'-0"

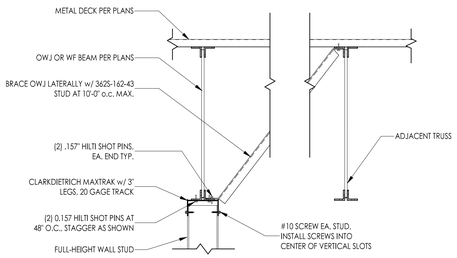

PARALLEL TO BOT. OF JOIST

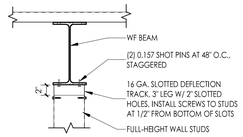

PARALLEL TO BOT. OF BEAM

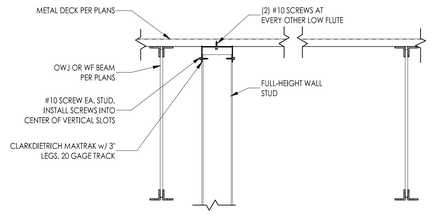

PARALLEL, BETWEEN JOISTS

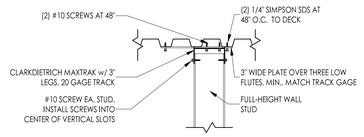

PERPENDICULAR TO JOISTS

1 INTERIOR FULL-HEIGHT WALL CONNECTION TO ROOF STRUCTURE

1" = 1'-0"

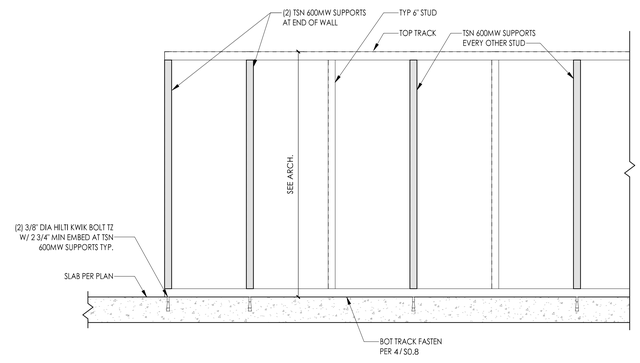

2 PONY WALL DETAIL

1" = 1'-0"

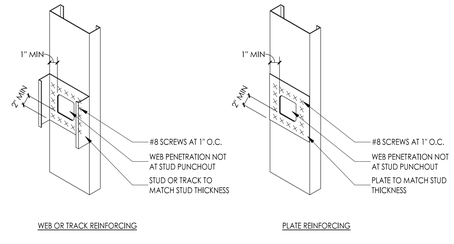

3 METAL STUD WEB REINFORCING

1 1/2" = 1'-0"

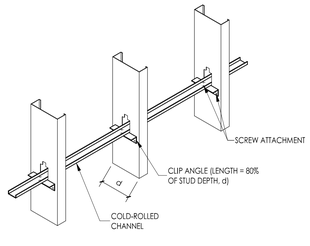

4 MID-WALL BRACING

1" = 1'-0"

tsk
225 South Arlington Avenue,
Suite A
Reno NV, 89501
phone: 775.857.2949
fax: 775.857.2403
www.tska.com

PROFESSIONAL ENGINEER - STATE OF NEVADA
BOISE ROBERT KYLE WILCOX
Exp: 6-30-24
CIVIL/STRUCTURAL
No. 19779
01/04/2024

THESE DRAWINGS AND SPECIFICATIONS ARE THE PROPERTY OF TATE SNYDER KIMSEY ARCHITECTS AND MAY NOT BE REPRODUCED OR USED FOR ANY PURPOSE WITHOUT THE ARCHITECTS WRITTEN CONSENT. AS INSTRUMENTS OF SERVICE, THESE DOCUMENTS ARE NOT FINAL AND READY FOR USE, AND THEREFORE NOT VALID, UNLESS THEY ARE SEALED, SIGNED AND DATED.

Copyright, Ltd 2023

Consultant

NELSON WILCOX
STRUCTURAL ENGINEERS
225 S. Arlington Ave, Ste B
Reno, Nevada 89501
(775)-848-3166
(702)-290-5760

NWSE Project No: 20220057

PLEASE RECYCLE

Project

SPARKS Fire Station #6

6963 SCHEIDBAR ROAD, SPARKS NEVADA 89436

Job No: 22-043

Owner

CITY OF SPARKS

BID SET

REVISIONS		
REV	DATE	DESCRIPTION
A	05.18.23	Review Comments

Sheet Title

TYP. INTERIOR COLD-FORMED STEEL DETAILS

Date: 01/04/2024

Sheet No:

S0.9

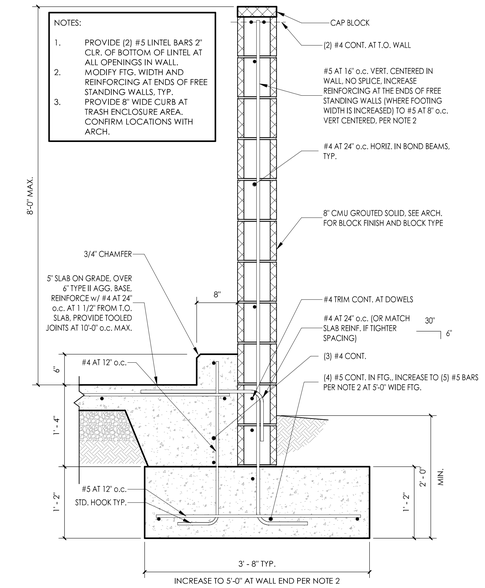

NOTES:

1. PROVIDE (2) #5 LINTEL BARS 2" CLR. OF BOTTOM OF LINTEL AT ALL OPENINGS IN WALL.
2. MODIFY FTG. WIDTH AND REINFORCING AT ENDS OF FREE STANDING WALLS. TYP.
3. PROVIDE 8" WIDE CURB AT TRASH ENCLOSURE AREA. CONFIRM LOCATIONS WITH ARCH.

1 CMU FREE-STANDING WALL DETAIL

1" = 1'-0"

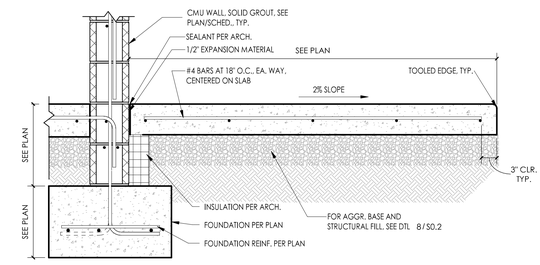

2 EXT. CONC. AT CMU WALL

1" = 1'-0"

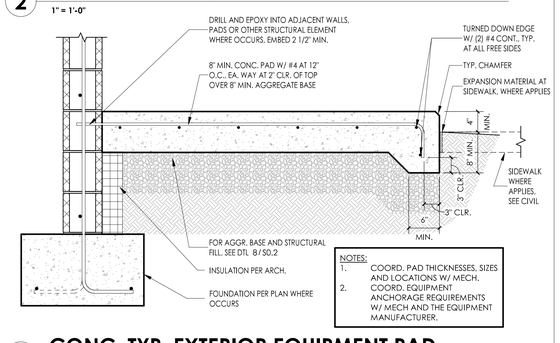

NOTES:

1. COORD. PAD THICKNESSES, SIZES AND LOCATIONS W/ MECH.
2. COORD. EQUIPMENT ANCHORAGE REQUIREMENTS W/ MECH AND THE EQUIPMENT MANUFACTURER.

3 CONC. TYP. EXTERIOR EQUIPMENT PAD

1" = 1'-0"

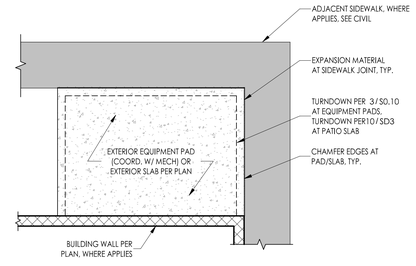

4 TYP. EXTERIOR SLAB EDGE JOINTS (PLAN VIEW)

1/4" = 1'-0"

tsk
225 South Arlington Avenue,
Suite A
Reno NV, 89501
phone: 775.857.2949
fax: 775.857.2403
www.tska.com

PROFESSIONAL ENGINEER - STATE OF NEVADA
BOISE
ROBERT KYLE WILCOX
Exp: 6-30-24
CIVIL/STRUCTURAL
No. 19779
01/04/2024

THESE DRAWINGS AND SPECIFICATIONS ARE THE PROPERTY OF TATE SNYDER KIMSEY ARCHITECTS AND MAY NOT BE REPRODUCED OR USED FOR ANY PURPOSE WITHOUT THE ARCHITECTS WRITTEN CONSENT. AS INSTRUMENTS OF SERVICE, THESE DOCUMENTS ARE NOT FINAL AND READY FOR USE, AND THEREFORE NOT VALID, UNLESS THEY ARE SEALED, SIGNED AND DATED.

Copyright, Ltd 2023

Consultant

NELSON WILCOX
STRUCTURAL ENGINEERS
225 S. Arlington Ave, Ste B
Reno, Nevada 89501
(775)-848-3166
(702)-290-5760

NWSE Project No: 20220057

PLEASE RECYCLE

Project

SPARKS Fire Station #6

6963 SCHEIDBAR ROAD, SPARKS NEVADA 89436

Job No: 22-043

Owner

CITY OF SPARKS

BID SET

REVISIONS		
REV	DATE	DESCRIPTION

Sheet Title

TYP. SITE DETAILS

Date: 01/04/2024

Sheet No:

S0.10

CONTINUOUS FOOTINGS SCHEDULE

MARK	WIDTH	THICK.	REINFORCING CROSSWISE			REINFORCING LENGTHWISE				REMARKS
			SIZE	LENGTH	SPACING (O.C.)	NO.	SIZE	LENGTH	SPACING (O.C.)	
CF2.0	2' - 0"	14"				3	#5	CONT.	8 11/16"	
CF3.0	3' - 0"	14"				4	#5	CONT.	9 13/16"	
CF3.8	3' - 8"	14"				4	#5	CONT.	12 7/16"	
CF5.0	5' - 0"	14"				5	#5	CONT.	13 3/8"	

SPOT FOOTING SCHEDULE

MARK	WIDTH	LENGTH	THICK.	REINFORCING CROSSWISE				REINFORCING LENGTHWISE				QUANTITY	REMARKS
				NO.	SIZE	LENGTH	SPACING (O.C.)	NO.	SIZE	LENGTH	SPACING (O.C.)		
F2x8	1' - 10 3/4"	7' - 11 3/8"	35"		#5	1' - 4 3/4"		3	#5	7' - 5 3/8"	8 1/16"	2	REINF. T&B. SEE DETAIL 7/S0.1 FOR ADDITIONAL PER REINFORCING AT COL.
F3.0	3' - 0"	3' - 0"	12"	3	#5	2' - 6"	14 11/16"	3	#5	2' - 6"	14 11/16"	2	

AREA A BASE PLATE / ANCHOR BOLT SCHEDULE

TYPE	QUANTITY	PLATE THICKNESS "T"	GROUT THICKNESS "G"	NUMBER OF ANCHORS	ANCHOR DIAMETER	ANCHOR EMBEDMENT "E"	ANCHOR PROJECTION "P"	CAST-IN OR EPOXY
BP-1	2	1/2"	1 1/2"	4	5/8"	9"	4"	CAST-IN

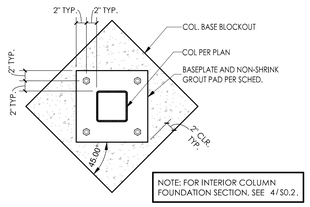

NOTE: FOR INTERIOR COLUMN FOUNDATION SECTION, SEE 4/S0.2.

TYP. BASEPLATE

1" = 1'-0"

CMU WALL SCHEDULE

MARK	TYPE	WIDTH	REINFORCEMENT		FOOTING DOWELS	REMARKS
			VERT.	HORIZ.		
W1	CMU	8"	#5 AT 24" O.C., CENTERED	#4 AT 32" O.C.	TO MATCH VERTS.	(2) #5 (HORIZ) CONT. BARS AT T.O. WALL AND/OR ROOF & FLOOR LINE. SEE DETAILS
W2	CMU	12"	#6 AT 24" O.C., EA. FACE	#5 AT 24" O.C.	TO MATCH VERTS.	(2) #5 (HORIZ) CONT. BARS AT T.O. WALL AND/OR ROOF & FLOOR LINE. SEE DETAILS
W3	CMU	6"	#5 AT 24" O.C., CENTERED	#4 AT 32" O.C.	TO MATCH VERTS.	SEE WALL ELEVATIONS AND DTL 9/S0.4
W4	CMU	12"	#6 AT 24" O.C., EA. FACE	#6 AT 16" O.C.	TO MATCH VERTS.	(2) #5 (HORIZ) CONT. BARS AT T.O. WALL AND/OR ROOF & FLOOR LINE. SEE DETAILS

NOTES:

1. **SEE WALL ELEVATIONS FOR ADDITIONAL REINFORCING WHERE REQUIRED.**
2. ALL CMU WALLS TO BE FULLY GROUTED.
3. MASONRY SHALL BE CONSTRUCTED OF HOLLOW OPEN END UNITS WHEREVER POSSIBLE AND SHALL BE LAID IN A RUNNING BOND PATTERN.
4. FOLLOW DETAIL 9/S0.3 FOR MIN. CMU CORNER AND 12/S0.3 FOR JAMB REINFORCEMENT.
5. ADDITIONAL VERTICAL AND HORIZONTAL REINFORCING SHOWN ON WALL ELEVATIONS SHALL BE USED IN PLACE OF TYPICAL WALL REINFORCING SPECIFIED IN WALL SCHEDULE.
6. WHERE ADDITIONAL VERTICAL BARS SHOWN ON ELEVATIONS COINCIDE WITH TYPICAL JAMB REINFORCING, THE LARGER QUANITITY AND/OR LARGER BAR DIAMETER SHALL BE USED.
7. PROVIDE HORIZONTAL CORNER BARS AT ALL CORNERS AND INTERSECTING WALLS PER 9/S0.3 .
8. PROVIDE (2) #5 CONT. HORIZONTAL CHORD STEEL AT ALL ROOF AND FLOOR LINE LEVELS PER DETAILS. U.N.O.
9. PROVIDE CONT. HORIZ. #5 BAR OR BARS AT JOIST WALL ANCHORS PER DETAILS (WHERE OCCURS).
10. ALL HORIZONTAL BARS SHALL BE ANCHORED AROUND END VERTICAL REINFORCING BARS AT JAMBS WITH A STANDARD HOOK.
11. PROVIDE CMU REINFORCEMENT LAP SPLICES PER GENERAL NOTES.
12. BARS E.F. SHALL BE PLACED 1/2" CLEAR OF THE INSIDE FACE OF THE CMU SHELL, INCLUDING AT JAMBS.
13. BARS CENTERED SHALL BE CENTERED IN THE CMU WALL, HORIZ. STEEL TO BE PLACED ALONG SIDE.

NOTES:

1. SEE WALL ELEVATIONS FOR MORE RESTRICTIVE WALL REINFORCEMENT, VERTICAL WALL REINFORCING SHALL BE EMBEDDED IN FOUNDATIONS TO MATCH VERTICAL AND TYPICAL REINFORCING IN ELEVATIONS.
2. CONTRACTOR SHALL PROVIDE CONSTRUCTION JOINTS (C.J.) AND CONTROL JOINTS (ALTERNATE S.J. AND D.J.) FOR ALL SLABS ON GRADE IN ACCORDANCE WITH DETAILS 1/S0.3 & 7/S0.2 , RESPECTIVELY. JOINTS TO BE PLACED AT 10'-0" MAX. O.C. AT 5" SLABS, 16' - 0" MAX. O.C. AT 8" SLABS, AND LOCATED AT ALL RE-ENTRANT SLAB CORNERS, INTERIOR COLUMN LOCATIONS, OR ANY OTHER SLAB ON GRADE DISCONTINUITIES. SEE 12/S0.2 FOR SLAB ON GRADE DOWELED JOINT INTERSECTIONS. A DRAWING SHOWING THE PROPOSED LAYOUT OF ALL SLAB JOINTS SHALL BE SUBMITTED TO THE ARCHITECT FOR REVIEW AND APPROVAL.

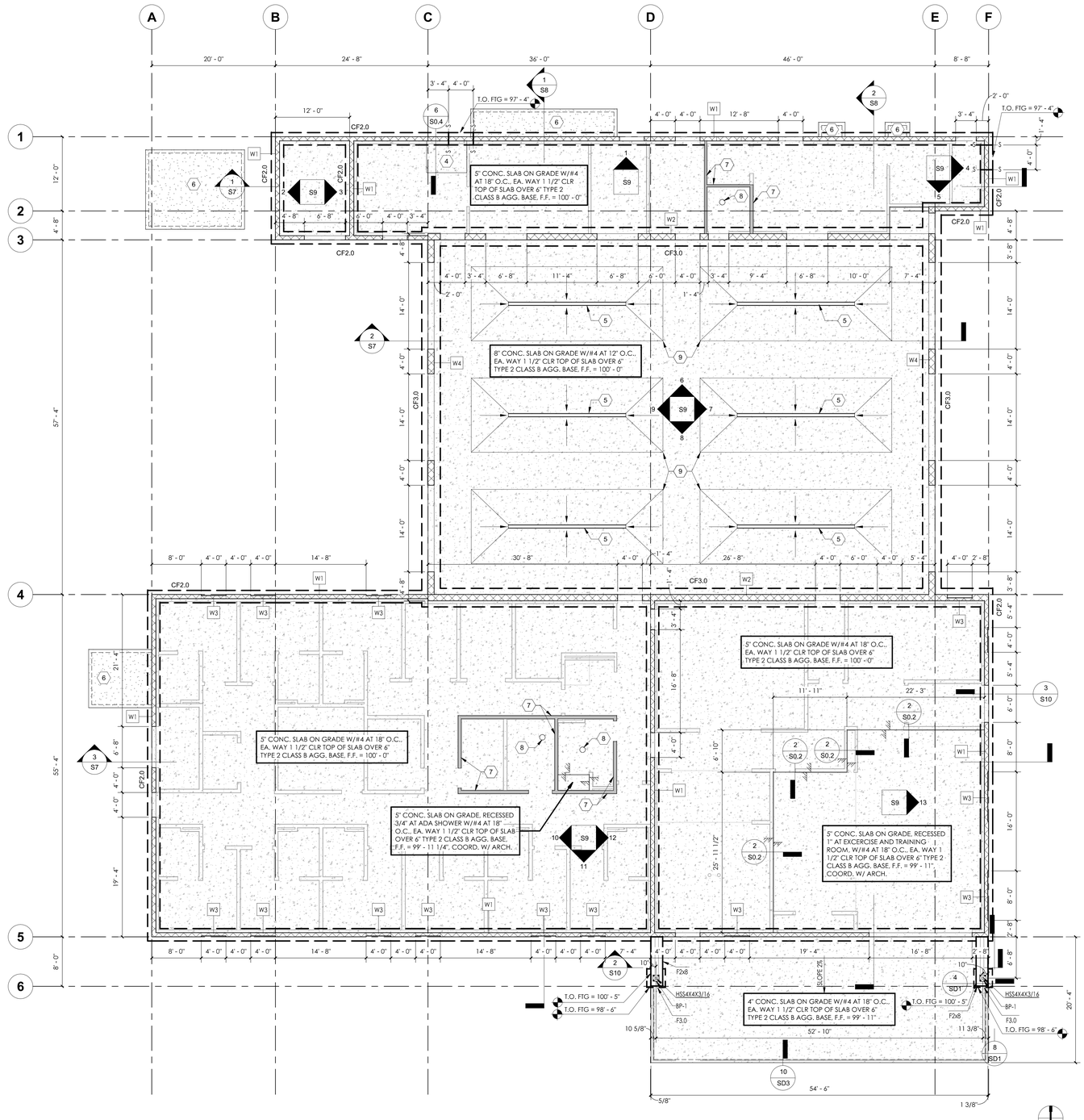

FOUNDATION PLAN

1 1/8" = 1'-0"

GENERAL NOTES

1. T.O. EXTERIOR FOOTINGS = 98' - 8" TYP., U.N.O.
2. T.O. INTERIOR FOOTINGS = 98' - 8" TYP., U.N.O.
3. CENTER ALL COLUMN SPOT FOOTINGS BELOW COLUMNS TYP.
4. NO CONDUIT SHALL BE PLACED IN THE SLAB ON GRADE.
5. SEE 16/S0.2 WHERE UTILITIES ENTER BUILDING OR ARE ADJACENT TO COLUMN FOOTINGS.
6. SEE 8/S0.2 & GENERAL NOTES FOR ENGINEERING FILL REQUIREMENTS AND SUBGRADE PREPARATION REQUIREMENTS.
7. SEE ARCHITECTURAL AND/OR MECHANICAL/PLUMBING DRAWINGS FOR ANY FLOOR DRAINS OR SINKS. CONTRACTOR TO COORDINATE.
8. SEE 7/S0.2 FOR TYPICAL SLAB ON GRADE JOINTS. JOINTS TO BE PLACED AT 10'-0" MAX. O.C. AT 5" SLABS, 16' - 0" MAX. O.C. AT 8" SLABS, AND LOCATED AT ALL RE-ENTRANT SLAB CORNERS, INTERIOR COLUMN LOCATIONS, OR ANY OTHER SLAB ON GRADE DISCONTINUITIES. SEE 12/S0.2 FOR SLAB ON GRADE DOWELED JOINT INTERSECTIONS.
9. SEE 6/S0.2 FOR TYPICAL FOUNDATION REINFORCING LAPS AT CORNERS, ENDS, AND INTERSECTIONS.
10. SEE 10/S0.2 & 11/S0.2 FOR TYPICAL REINFORCING HOOKS, BENDS AND HOOKS & BENDS FOR TIES.
11. PLACE 15 MIL VAPOR BARRIER BENEATH CONCRETE SLAB (OVER AGGREGATE BASE) AT LOCATIONS WITH TILE FLOORING (OR OTHER FLOORING SENSITIVE TO MOISTURE). SEAL ALL SEAMS AND SEAL AROUND ALL PENETRATIONS PER VAPOR BARRIER MANUFACTURER RECOMMENDATIONS.
12. SEE 5/S0.3 FOR TYPICAL CMU CONTROL JOINT.
13. CONTRACTOR TO VERIFY AND COORDINATE ALL DIMENSIONS AND CONDITIONS WITH ARCH. PRIOR TO FABRICATION OR ERECTION.
14. SEE SHEETS S0.8 & S0.9 FOR TYPICAL INTERIOR WALL DETAILS.

KEYNOTES

4 6" HOUSEKEEPING PAD FOR DRYERS. VERIFY SIZE AND LOCATION W/ ARCH./MECH. REFER TO DETAIL 6/S0.4.

5 TRENCH DRAIN. REFER TO DETAIL 13/S0.2 AND PLUMBING DRAWINGS. CONTRACTOR TO COORDINATE TRENCH DRAINS AND FLOOR SLOPES W/ ARCH. AND/OR MECH.

6 EQUIPMENT PAD. REFER TO DETAIL 3/S0.10. COORDINATE SIZE AND LOCATION W/ MECH.

7 4" TALL CURB. REFER TO 17/S0.2 AND ARCH.

8 FLOOR DRAIN. REFER TO PLUMBING DRAWINGS.

9 SLAB SLOPED TO TRENCH DRAIN. REFER TO ARCH.

LEGEND

W# WALL TYPE, PER SCHEDULE

S — — — S STEP IN FOOTING, SEE 3/S0.2

STEP IN SLAB, SEE 2/S0.2

tsk

225 South Arlington Avenue,
Suite A
Reno NV, 89501
phone: 775.857.2949
fax: 775.857.2403
www.tska.com

PROFESSIONAL ENGINEER - STATE OF NEVADA
ROBERT KYLE WILCOX
Exp: 6-30-24
CIVIL/STRUCTURAL
No. 19779
01/04/2024

THESE DRAWINGS AND SPECIFICATIONS ARE THE PROPERTY OF TATE SNYDER KIMSEY ARCHITECTS AND MAY NOT BE REPRODUCED OR USED FOR ANY PURPOSE WITHOUT THE ARCHITECTS WRITTEN CONSENT. AS INSTRUMENTS OF SERVICE, THESE DOCUMENTS ARE NOT FINAL AND READY FOR USE, AND THEREFORE NOT VALID, UNLESS THEY ARE SEALED, SIGNED AND DATED.

Copyright, Ltd 2023

Consultant

NELSON WILCOX
STRUCTURAL ENGINEERS
225 S. Arlington Ave, Ste B (775)-848-3166
Reno, Nevada 89501 (702)-290-5760

NWSE Project No: 20220057

PLEASE RECYCLE

Project

SPARKS Fire Station #6

6963 SCHEIDBAR ROAD, SPARKS NEVADA 89436

Job No: 22-043

Owner

CITY OF SPARKS

BID SET

REVISIONS		
REV	DATE	DESCRIPTION

Sheet Title

FOUNDATION PLAN

Date: 01/04/2024

Sheet No:

S2

METAL DECK SCHEDULE

MARK	DECK TYPE (SEE NOTE 1)	DECK SIZE	DECK ATTACHMENT ZONE	DIAPHRAGM CONNECTIONS (SEE NOTES 2, 3 AND 6)		
				LOW FLUTES		SIDE SEAMS
				PERPENDICULAR TO SUPPORT	PARALLEL TO SUPPORT	
ER3.5A	EPICORE ER3.5A	3 1/2" x 20 GA	I	FASTENERS AT 24/6 PATTERN	FASTENERS AT 3" O.C. MAX	#12 SCREWS AT 3" O.C. MAX
ER3.5A-2	EPICORE ER3.5A	3 1/2" x 20 GA	II	FASTENERS AT 24/6 PATTERN	FASTENERS AT 6" O.C. MAX	#12 SCREWS AT 6" O.C. MAX
PLB-I	PLB-36	1 1/2" x 18 GA	I	FASTENERS AT 36/4 PATTERN	FASTENERS AT 12" O.C. MAX	VSC2 AT 24" O.C. MAX
PLB-II	PLB-36	1 1/2" x 18 GA	II	FASTENERS AT 36/7/4 PATTERN	FASTENERS AT 6" O.C. MAX	VSC2 AT 6" O.C. MAX

NOTES:

1. METAL DECK SHALL BE AS SPECIFIED BY ASC, VERCO, VULCRAFT, EPIC OR APPROVED EQUAL.
2. CONNECTIONS SHALL BE PLACED IN ACCORDANCE WITH THE DECK MANUFACTURERS STANDARD PATTERN AND REQUIREMENTS.
3. VSC2 = VERCO PUNCHLOK II SIDELAP CONNECTION.
4. DECK SHALL BE PLACED IN EITHER A 2-SPAN OR 3-SPAN CONDITION. SINGLE DECK SPANS WILL NOT BE ALLOWED UNLESS SPECIFICALLY NOTED.
5. REFER TO DECK ATTACHMENT DIAGRAM FOR DECK ATTACHMENT ZONE.
6. FASTENERS SHALL BE #12 SCREWS FOR SUPPORT STEEL THICKNESS LESS THAN 1/8". FASTENERS SHALL BE HILTI HSN-24 FOR SUPPORT STEEL THICKNESS 1/8" TO 3/8". FASTENERS SHALL BE HILTI X-ENP-19 FOR SUPPORT STEEL THICKNESS GREATER THAN 1/4". FOR SUPPORT STEEL THICKNESS BETWEEN 1/4" AND 3/8" (INCLUSIVE), HILTI HSN-24 OR X-ENP-19 FASTENERS MAY BE USED AT CONTRACTOR'S OPTION.

JOIST BEARING PLATE SCHEDULE

MARK	PLATE	ANCHOR	WALL ANCHORAGE LOAD (0.6W OR 0.7E)
P4	8" CMU: 3/4" x 5 1/2" x 1' - 3" 12" CMU: 3/4" x 9" x 1' - 3"	(4) 3/4" x 6" NSA AT 4" O.C.	8" CMU: 3.9 KIPS 12" CMU: 6.1 KIPS
P6	12" CMU: 3/4" x 9" x 1' - 11"	(6) 3/4" x 6" NSA AT 4" O.C.	12" CMU: 8.1 KIPS

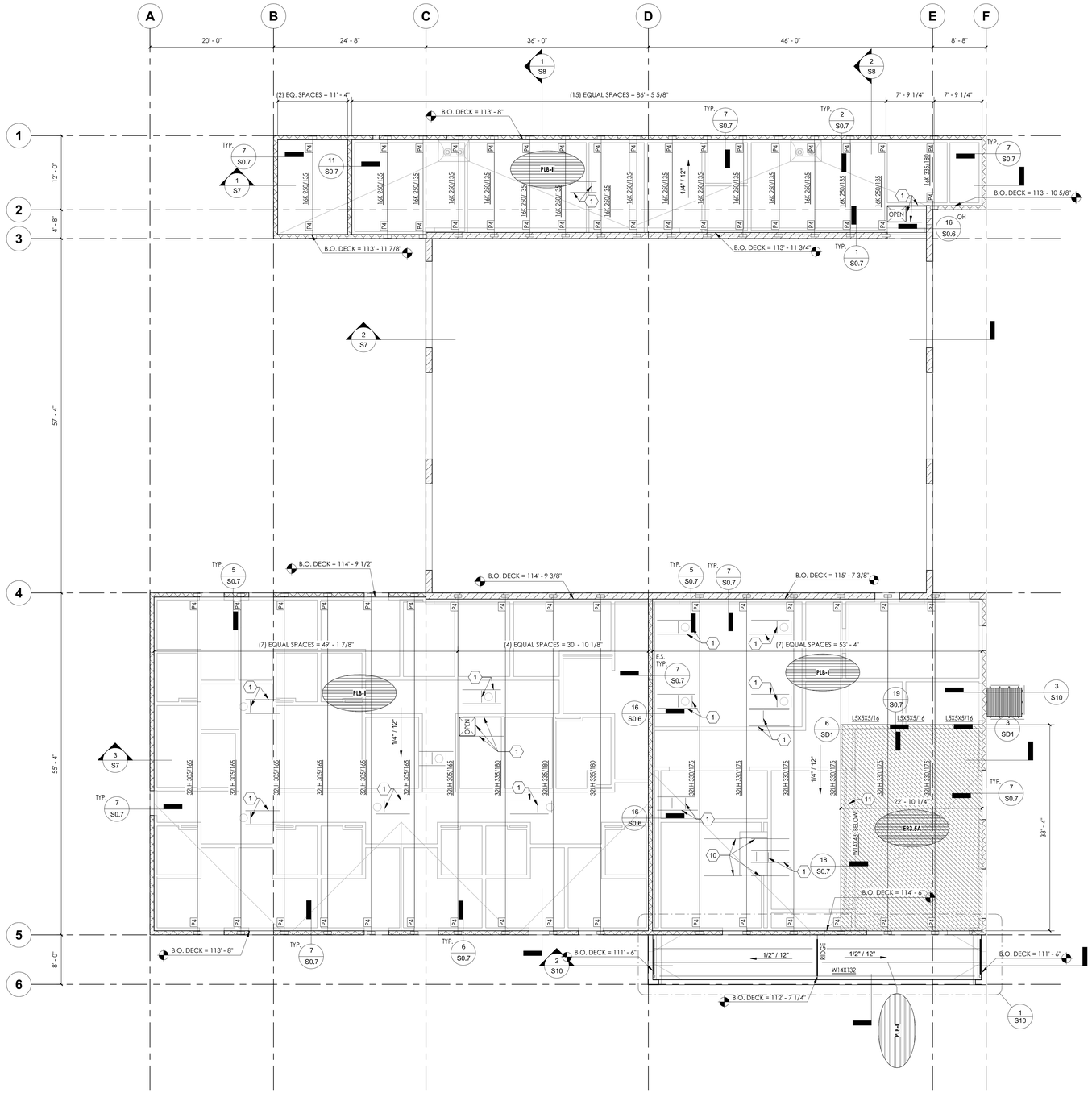

1 **LOW ROOF FRAMING PLAN**
1/8" = 1'-0"

GENERAL NOTES

1. B.O. DECK= TOP OF FRAMING (BOTTOM OF DECK) ELEVATION ABOVE THE FINISHED FIRST FLOOR.
2. T.O.S.= TOP OF WIDE FLANGE GIRDER ELEVATION ABOVE FINISHED FIRST FLOOR.
3. SEE FOR STEEL JOIST AND JOIST GIRDER DESIGN CRITERIA.
4. SEE S/S0.6 & 4/S0.6 FOR ROOF HUNG PIPING SUPPORTS.
5. FIRE SPRINKLER CONTRACTOR SHALL LAY OUT FIRE SPRINKLER LINES SO THAT NO LINE PASSES UNDER SKYLIGHT/SMOKEVENTS OR FUTURE MECHANICAL UNITS (WHERE THESE ITEMS OCCUR).
6. FOR ROOF HATCH WITH LADDER ACCESS, SEE ARCHITECTURAL.
7. STEEL JOIST AND JOIST GIRDER SUPPLIER SHALL SUBMIT STRUCTURAL CALCULATIONS, SHOP, AND ERECTION DRAWINGS SEALED AND SIGNED BY A NEVADA REGISTERED CIVIL OR STRUCTURAL ENGINEER TO THE ENGINEER OF RECORD WHO AGREES TO REVIEW THESE DOCUMENTS FOR ACCEPTANCE PRIOR TO FABRICATION. STRUCTURAL CALCULATIONS, SHOP AND ERECTION DRAWINGS SHALL BE SUBMITTED TO THE BUILDING DEPARTMENT FOR ACCEPTANCE AFTER THE ENGINEER OF RECORD HAS NOTED HIS/HER ACCEPTANCE.
8. JOIST AND JOIST GIRDER DRAWINGS SHALL SHOW COMPLIANCE WITH THE STANDARD SPECIFICATIONS FOR STEEL JOISTS, K-SERIES, LH-SERIES, DLH-SERIES AND JOIST GIRDERS, 44TH EDITION, PUBLISHED BY THE STEEL JOIST INSTITUTE.
9. JOIST AND JOIST GIRDERS SHALL BE IDENTIFIED AS TO TYPE, SIZE, AND MANUFACTURER BY TAGGING OR OTHER SUITABLE MEANS AT THE TIME OF MANUFACTURE OR FABRICATION. SUCH IDENTIFICATION SHALL BE MAINTAINED CONTINUOUSLY TO THE POINT OF THEIR INSTALLATION IN A STRUCTURE.

KEYNOTES

1 CBX11.5 FRAMING AT ROOF HATCH. SOLAR TUBE, EXHAUST FAN, OR GRAVITY INTAKE. COORDINATE LOCATIONS WITH ARCH., MECH., AND APPROVED SUBMITTALS. REFER TO DETAILS 7/S0.6, 12/S0.6, AND 1/S0.5 FOR SIM.

10 (2) L4x4x1/4 TO SANDWICH HOOD HANGER RODS. REFER TO DETAIL 12/SD1 AND MANUFACTURER INSTALLATION INSTRUCTIONS. COORDINATE W/ MECH.

11 W14x43 SUPPORT BEAM BELOW FOR PARTITION DOOR. COORDINATE HEIGHT AND LOCATION W/ ARCH. REFER TO DETAIL 14/SD1 FOR WALL CONNECTION.

LEGEND

P# JOIST BEARING PLATE PER SCHED.

XXX-X METAL DECK PER SCHED.

tsk
225 South Arlington Avenue,
Suite A
Reno NV, 89501
phone: 775.857.2949
fax: 775.857.2403
www.tska.com

PROFESSIONAL ENGINEER - STATE OF NEVADA
BOISE ROBERT KYLE WILCOX
Exp: 6-30-24
CIVIL/STRUCTURAL
No. 19779
01/04/2024

THESE DRAWINGS AND SPECIFICATIONS ARE THE PROPERTY OF TATE SNYDER KIMSEY ARCHITECTS AND MAY NOT BE REPRODUCED OR USED FOR ANY PURPOSE WITHOUT THE ARCHITECTS WRITTEN CONSENT. AS INSTRUMENTS OF SERVICE, THESE DOCUMENTS ARE NOT FINAL AND READY FOR USE, AND THEREFORE NOT VALID, UNLESS THEY ARE SEALED, SIGNED AND DATED.

Copyright, Ltd 2023

Consultant

NELSON WILCOX
STRUCTURAL ENGINEERS
225 S. Arlington Ave, Ste B
Reno, Nevada 89501
(775)-848-3166
(702)-290-5760

NWSE Project No: 20220057

PLEASE RECYCLE

Project
SPARKS Fire Station #6

6963 SCHEIDBAR ROAD, SPARKS NEVADA 89436

Job No: 22-043

Owner
CITY OF SPARKS

CITY OF SPARKS FIRE DEPARTMENT Est. 1905

BID SET

REVISIONS		
REV	DATE	DESCRIPTION
A	05.18.23	Review Comments

Sheet Title
LOW ROOF FRAMING PLAN

Date: 01/04/2024

Sheet No:
S3

METAL DECK SCHEDULE

MARK	DECK TYPE (SEE NOTE 1)	DECK SIZE	DECK ATTACHMENT ZONE	DIAPHRAGM CONNECTIONS (SEE NOTES 2, 3 AND 6)		
				LOW FLUTES		SIDE SEAMS
				PERPENDICULAR TO SUPPORT	PARALLEL TO SUPPORT	
ER3.5A	EPICORE ER3.5A	3 1/2" x 20 GA	I	FASTENERS AT 24/6 PATTERN	FASTENERS AT 3' O.C. MAX	#12 SCREWS AT 3' O.C. MAX
ER3.5A-2	EPICORE ER3.5A	3 1/2" x 20 GA	II	FASTENERS AT 24/6 PATTERN	FASTENERS AT 6' O.C. MAX	#12 SCREWS AT 6' O.C. MAX
PLB-II	PLB-36	1 1/2" x 18 GA	II	FASTENERS AT 36/4 PATTERN	FASTENERS AT 12' O.C. MAX	VSCZ AT 24' O.C. MAX
PLB-II	PLB-36	1 1/2" x 18 GA	II	FASTENERS AT 36/7/4 PATTERN	FASTENERS AT 6' O.C. MAX	VSCZ AT 6' O.C. MAX

NOTES:

1. METAL DECK SHALL BE AS SPECIFIED BY ASC, VERCO, VULCRAFT, EPIC OR APPROVED EQUAL.
2. CONNECTIONS SHALL BE PLACED IN ACCORDANCE WITH THE DECK MANUFACTURERS STANDARD PATTERN AND REQUIREMENTS.
3. VSCZ = VERCO PUNCHLOK II SIDELAP CONNECTION.
4. DECK SHALL BE PLACED IN EITHER A 2-SPAN OR 3-SPAN CONDITION. SINGLE DECK SPANS WILL NOT BE ALLOWED UNLESS SPECIFICALLY NOTED.
5. REFER TO DECK ATTACHMENT DIAGRAM FOR DECK ATTACHMENT ZONE.
6. FASTENERS SHALL BE #12 SCREWS FOR SUPPORT STEEL THICKNESS LESS THAN 1/8". FASTENERS SHALL BE HILTI HSN-24 FOR SUPPORT STEEL THICKNESS 1/8" TO 3/8". FASTENERS SHALL BE HILTI X-ENP-19 FOR SUPPORT STEEL THICKNESS GREATER THAN 1/4". FOR SUPPORT STEEL THICKNESS BETWEEN 1/4" AND 3/8" (INCLUSIVE), HILTI HSN-24 OR X-ENP-19 FASTENERS MAY BE USED AT CONTRACTOR'S OPTION.

JOIST BEARING PLATE SCHEDULE

MARK	PLATE	ANCHOR	WALL ANCHORAGE LOAD (0.6W OR 0.7E)
P4	8" CMU: 3/4" x 5 1/2" x 1' - 3" 12" CMU: 3/4" x 9" x 1' - 3"	(4) 3/4" x 6" NSA AT 4' O.C.	8" CMU: 3.9 KIPS 12" CMU: 6.1 KIPS
P6	12" CMU: 3/4" x 9" x 1' - 11"	(6) 3/4" x 6" NSA AT 4' O.C.	12" CMU: 8.1 KIPS

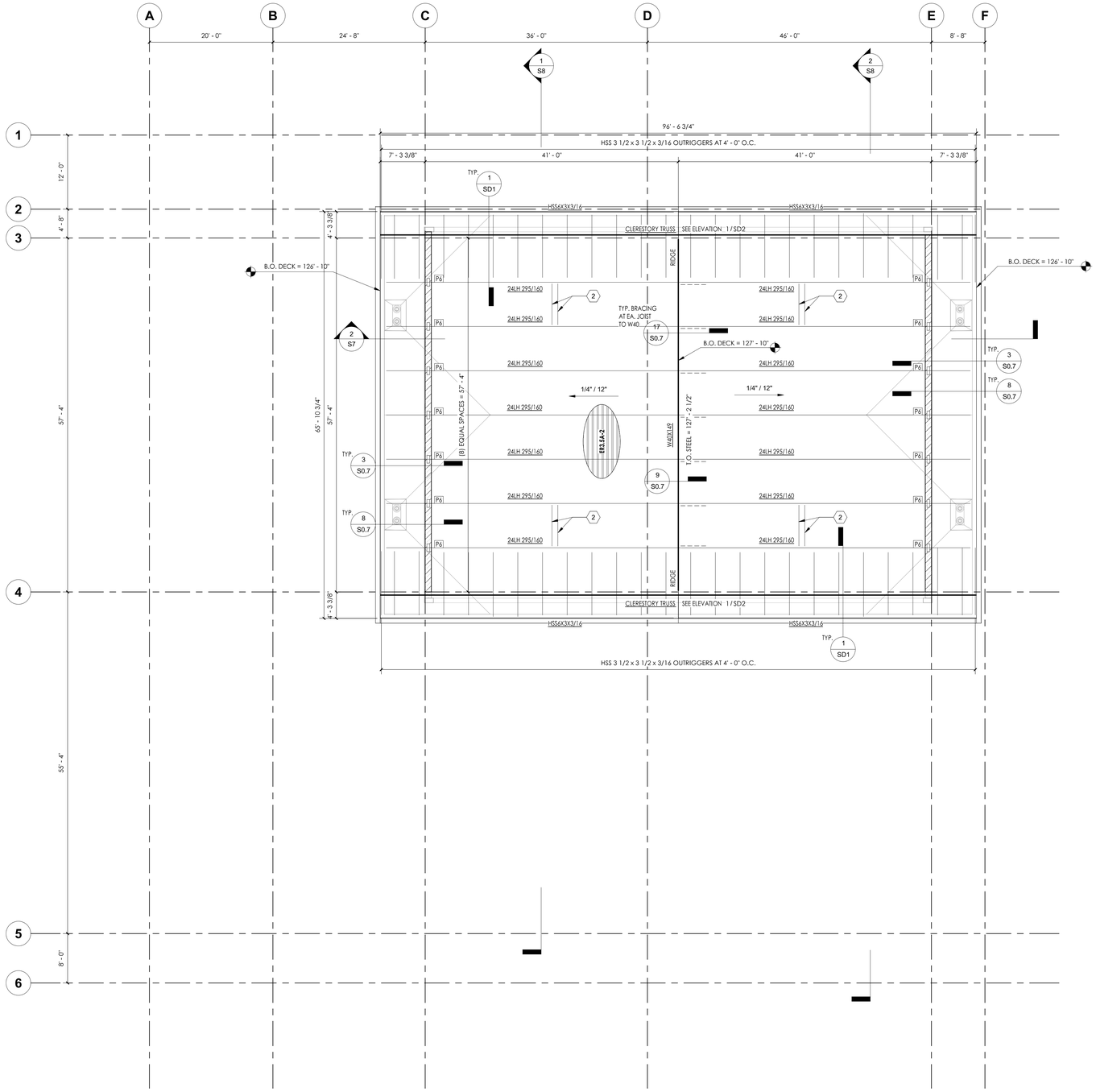

1 **HIGH ROOF FRAMING PLAN**
1/8" = 1'-0"

NORTH

GENERAL NOTES

1. B.O. DECK= TOP OF FRAMING (BOTTOM OF DECK) ELEVATION ABOVE THE FINISHED FIRST FLOOR.
2. T.O.S.= TOP OF WIDE FLANGE GIRDER ELEVATION ABOVE FINISHED FIRST FLOOR.
3. SEE FOR STEEL JOIST AND JOIST GIRDER DESIGN CRITERIA.
4. SEE 3/ S0.6 & 4 / S0.6 FOR ROOF HUNG PIPING SUPPORTS.
5. FIRE SPRINKLER CONTRACTOR SHALL LAY OUT FIRE SPRINKLER LINES SO THAT NO LINE PASSES UNDER SKYLIGHTS/SMOKEVENTS OR FUTURE MECHANICAL UNITS (WHERE THESE ITEMS OCCUR).
6. FOR ROOF HATCH WITH LADDER ACCESS, SEE ARCHITECTURAL.
7. STEEL JOIST AND JOIST GIRDER SUPPLIER SHALL SUBMIT STRUCTURAL CALCULATIONS, SHOP, AND ERECTION DRAWINGS SEALED AND SIGNED BY A NEVADA REGISTERED CIVIL OR STRUCTURAL ENGINEER TO THE ENGINEER OF RECORD WHO AGREES TO REVIEW THESE DOCUMENTS FOR ACCEPTANCE PRIOR TO FABRICATION. STRUCTURAL CALCULATIONS, SHOP AND ERECTION DRAWINGS SHALL BE SUBMITTED TO THE BUILDING DEPARTMENT FOR ACCEPTANCE AFTER THE ENGINEER OF RECORD HAS NOTED HIS/HER ACCEPTANCE.
8. JOIST AND JOIST GIRDER DRAWINGS SHALL SHOW COMPLIANCE WITH THE STANDARD SPECIFICATIONS FOR STEEL JOISTS, K-SERIES, LH-SERIES, DLH-SERIES AND JOIST GIRDERS, 44TH EDITION, PUBLISHED BY THE STEEL JOIST INSTITUTE.
9. JOIST AND JOIST GIRDERS SHALL BE IDENTIFIED AS TO TYPE, SIZE, AND MANUFACTURER BY TAGGING OR OTHER SUITABLE MEANS AT THE TIME OF MANUFACTURE OR FABRICATION. SUCH IDENTIFICATION SHALL BE MAINTAINED CONTINUOUSLY TO THE POINT OF THEIR INSTALLATION IN A STRUCTURE.

KEYNOTES

2 FAN MOUNT LOCATION REFER TO DETAIL 10/S0.6.

LEGEND

P# — JOIST BEARING PLATE PER SCHED.

XXX-X — METAL DECK PER SCHED.

tsk
225 South Arlington Avenue,
Suite A
Reno NV, 89501
phone: 775.857.2949
fax: 775.857.2403
www.tska.com

PROFESSIONAL ENGINEER - STATE OF NEVADA
BOISE R. ROBERT KYLE WILCOX
Exp: 6-30-24
CIVIL/STRUCTURAL
No. 19779
01/04/2024

THESE DRAWINGS AND SPECIFICATIONS ARE THE PROPERTY OF TATE SNYDER KIMSEY ARCHITECTS AND MAY NOT BE REPRODUCED OR USED FOR ANY PURPOSE WITHOUT THE ARCHITECTS WRITTEN CONSENT. AS INSTRUMENTS OF SERVICE, THESE DOCUMENTS ARE NOT FINAL AND READY FOR USE, AND THEREFORE NOT VALID, UNLESS THEY ARE SEALED, SIGNED AND DATED.

Copyright, Ltd 2023

Consultant

NELSON WILCOX
STRUCTURAL ENGINEERS
225 S. Arlington Ave, Ste B
Reno, Nevada 89501
(775)-848-3166
(702)-290-5760

NWSE Project No: 20220057

PLEASE RECYCLE

Project
SPARKS Fire Station #6

6963 SCHEIDBAR ROAD, SPARKS NEVADA 89436

Job No: 22-043

Owner
CITY OF SPARKS

CITY OF SPARKS FIRE DEPARTMENT Est. 1905

BID SET

REVISIONS		
REV	DATE	DESCRIPTION

Sheet Title
HIGH ROOF FRAMING PLAN

Date: 01/04/2024
Sheet No:
S4

LOW ROOF JOIST DESIGN CRITERIA

1. JOISTS AND JOIST GIRDERS SHALL BE DESIGNED BY THE JOIST MANUFACTURER IN ACCORDANCE WITH THE STEEL JOIST INSTITUTE (SJI) AND THE 2018 IBC. THE JOIST DESIGNATIONS INDICATED IN THE CONSTRUCTION DOCUMENTS SHALL BE CONSIDERED MINIMUMS. FINAL DESIGN AND DESIGNATION SHALL BE BY THE JOIST MANUFACTURER, BASED ON THE LOADING CRITERIA PRESENTED IN THE CONSTRUCTION DOCUMENTS, AND BE OF THE DEPTHS SHOWN ON THE DRAWINGS.
2. IN ADDITION TO THE LOADS INDICATED, JOISTS AND JOIST GIRDERS SHALL BE DESIGNED FOR ALL SPECIAL LOADS INDICATED ON THE PLANS AND DETAILS, INCLUDING THE MECHANICAL LOADS IDENTIFIED ON THE PLANS.
3. DEFLECTIONS OF ALL MEMBERS SHALL BE LIMITED TO L/360 FOR LIVE LOADS AND L/240 FOR TOTAL LOADS, U.N.O.
4. PROVIDE SJI STANDARD CAMBER U.N.O.
5. PROVIDE ALL REQUIRED BRIDGING FOR THE SPANS AND LOADING SHOWN WHETHER INDICATED ON PLANS OR NOT. WHERE INDICATED ON PLANS, LINES OF BRIDGING ARE APPROXIMATE AND SHALL BE ADJUSTED AS NECESSARY BY THE JOIST MANUFACTURER FOR THEIR FINAL DESIGN. THE CONTRACTOR AND JOIST MANUFACTURER SHALL COORDINATE THE LOCATIONS OF BRIDGING WITH MECHANICAL DUCTS, PIPING, OR OTHER ITEMS TO AVOID CONFLICTS. USE X-BRIDGING OR DIAGONAL BRACING AS REQUIRED AT LOCATIONS WHERE LINES OF BRIDGING MUST BE INTERRUPTED BECAUSE OF MECHANICAL DUCTWORK OR OTHER OBSTRUCTIONS. SEE TYPICAL BRIDGING DETAILS.
6. ALL JOISTS SHALL HAVE SEAT DEPTHS (SLOPING WHERE REQUIRED) AND TOP CHORD EXTENSIONS AS INDICATED IN PLANS AND DETAILS.
7. REINFORCE JOISTS PER TYPICAL DETAILS WHERE CONCENTRATED LOADS ARE APPLIED TO JOIST CHORDS FURTHER THAN 6" AWAY FROM PANEL POINTS.
8. JOISTS SHALL BE DESIGNED WITH CLEARANCES AS REQUIRED WHERE DUCTWORK PASSES THROUGH WEB SPACE. THE CONTRACTOR SHALL BE RESPONSIBLE FOR THE FINAL LAYOUT OF THESE DUCTS AND FOR COMMUNICATING THESE REQUIREMENTS TO THE JOIST MANUFACTURER.
9. ALL "LH" AND "K" SERIES JOISTS SHALL BE PROVIDED WITH EITHER 6" OR 3 1/2" HIGH BEARING SEAT AS SHOWN ON THE STRUCTURAL DETAILS.
10. JOISTS SHALL BE DESIGNED FOR THE FOLLOWING LOADS:

LOAD CASE	LOAD
DEAD LOAD	20 PSF AT 1 1/2" DECK
ROOF SNOW LOAD	23 PSF
WIND UPLIFT (ALLOWABLE)	SEE UPLIFT DIAGRAM
TOP CHORD AND JOIST SEAT AXIAL LOAD (0.6W OR 0.7E WALL ANCHORAGE)	SEE JOIST BEARING SEAT SCHEDULE
JOIST ADD LIVE LOAD ANYWHERE ALONG TOP OR BOTTOM CHORDS (ALL JOISTS AT OR BETWEEN PANEL POINTS)	500 LBS, U.N.O.

ADD LOADS

LOAD CASE	D (DOWN)	0.6W (UP)	0.6W (DOWN)	0.7E (UP OR DOWN)
LC1	181 LBS			
LC2				

NOTE:
1.

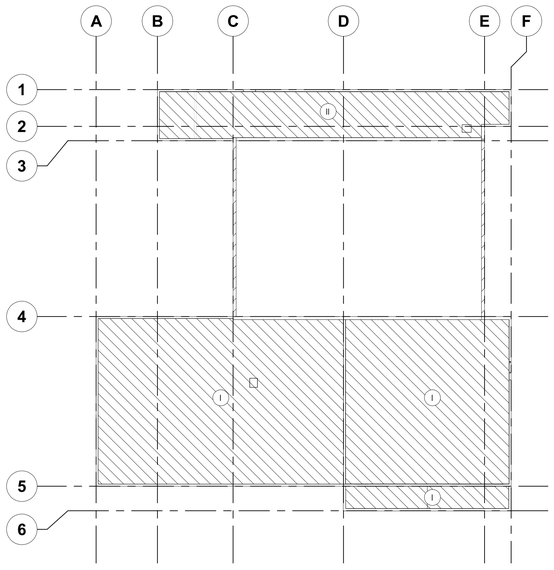

3 **ATTACHMENT ZONE DIAGRAM - LOW ROOF**
1" = 20'-0"

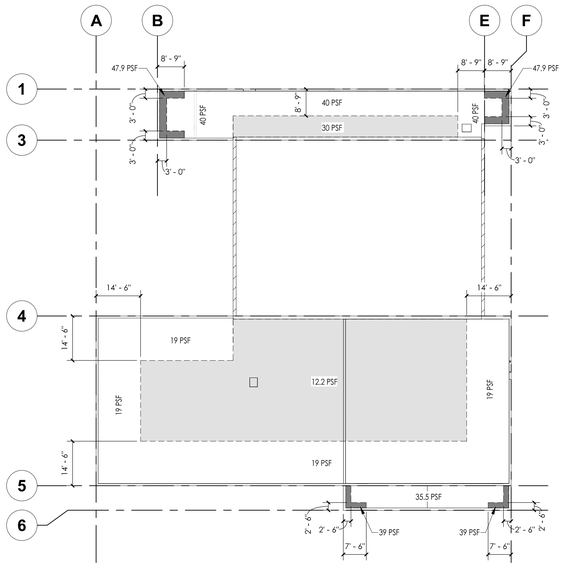

2 **WIND UPLIFT DIAGRAM (0.6W) - LOW ROOF**
1" = 20'-0"

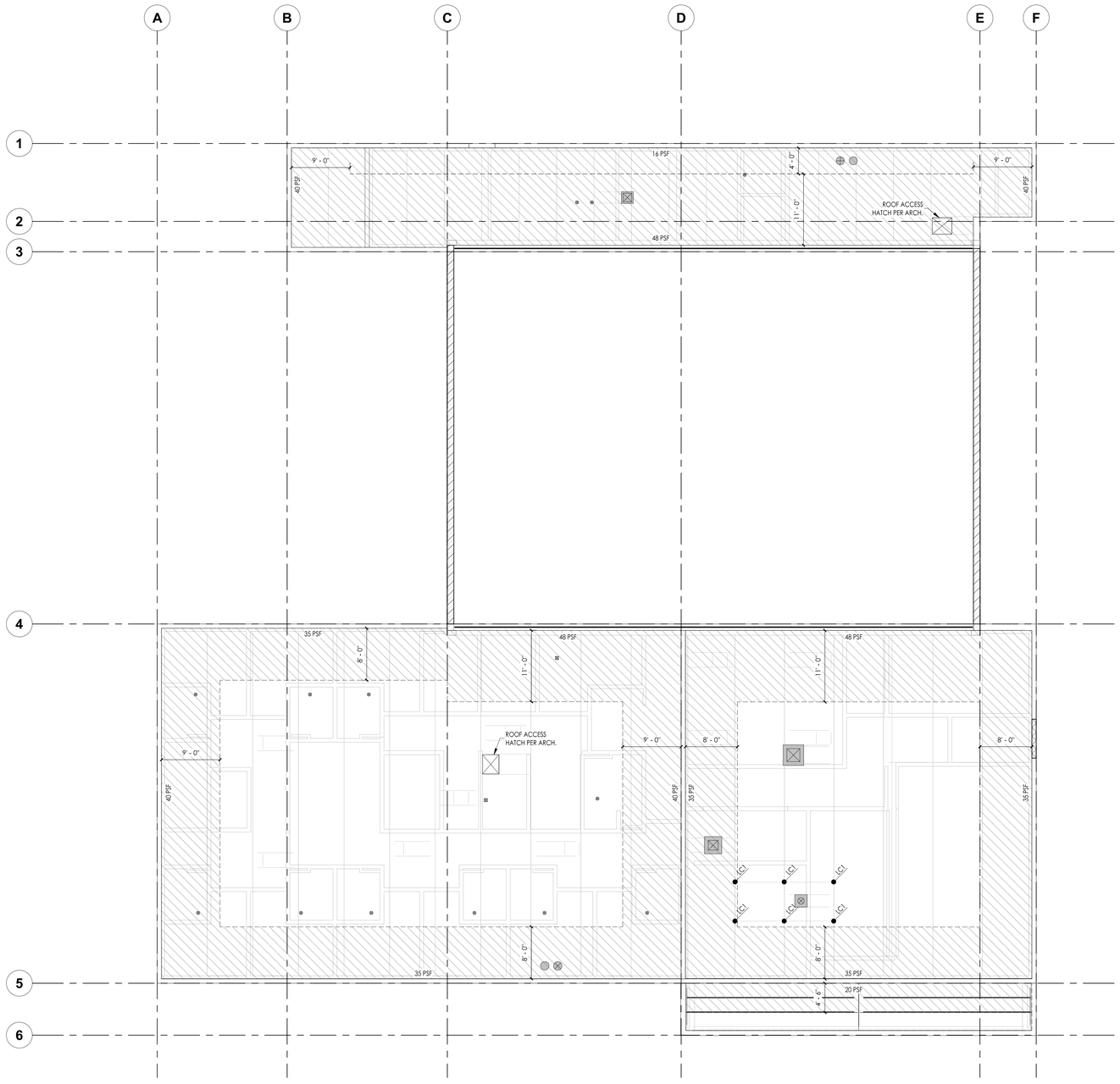

1 **LOW ROOF JOIST LOADING PLAN**
1/8" = 1'-0"

GENERAL NOTES

KEYNOTES

LEGEND

MECHANICAL EQUIPMENT, SEE MECH.

ROOF DECK OPENING, REINFORCE PER DETAIL COORDINATE WITH MECHANICAL

LC# JOIST POINT ADD LOADS PER ADD LOADS SCHEDULE

LC# JOIST DISTRIBUTED ADD LOADS PER ADD LOADS SCHED.

SNOW LOADING LEGEND

UNIFORM SNOW LOAD = 23 PSF

TAPERED SNOW DRIFT LOADS PER PLAN

DRIFT LOAD

UNIFORM SNOW LOAD = 23 PSF

DRIFT LENGTH

tsk
225 South Arlington Avenue,
Suite A
Reno NV, 89501
phone: 775.857.2949
fax: 775.857.2403
www.tska.com

PROFESSIONAL ENGINEER - STATE OF NEVADA
BOISE ROBERT KYLE WILCOX
Exp: 6-30-24
CIVIL/STRUCTURAL
No 19779
01/04/2024

THESE DRAWINGS AND SPECIFICATIONS ARE THE PROPERTY OF TATE SNYDER KIMSEY ARCHITECTS AND MAY NOT BE REPRODUCED OR USED FOR ANY PURPOSE WITHOUT THE ARCHITECTS WRITTEN CONSENT. AS INSTRUMENTS OF SERVICE, THESE DOCUMENTS ARE NOT FINAL AND READY FOR USE, AND THEREFORE NOT VALID, UNLESS THEY ARE SEALED, SIGNED AND DATED.

Copyright, Ltd 2023

Consultant

NELSON WILCOX
STRUCTURAL ENGINEERS
225 S. Arlington Ave, Ste B
Reno, Nevada 89501
(775)-848-3166
(702)-290-5760

NWSE Project No: 20220057

PLEASE RECYCLE

Project
SPARKS Fire Station #6

6963 SCHEIDBAR ROAD, SPARKS NEVADA 89436

Job No: 22-043

Owner
CITY OF SPARKS

BID SET

REVISIONS

REV	DATE	DESCRIPTION
A	05.18.23	Review Comments

Sheet Title
LOW ROOF JOIST LOADING PLAN

Date: 01/04/2024
Sheet No:
S5

HIGH ROOF JOIST DESIGN CRITERIA

1. JOISTS AND JOIST GIRDERS SHALL BE DESIGNED BY THE JOIST MANUFACTURER IN ACCORDANCE WITH THE STEEL JOIST INSTITUTE (SJI) AND THE 2018 IBC. THE JOIST DESIGNATIONS INDICATED IN THE CONSTRUCTION DOCUMENTS SHALL BE CONSIDERED MINIMUMS. FINAL DESIGN AND DESIGNATION SHALL BE BY THE JOIST MANUFACTURER, BASED ON THE LOADING CRITERIA PRESENTED IN THE CONSTRUCTION DOCUMENTS, AND BE OF THE DEPTHS SHOWN ON THE DRAWINGS.
2. IN ADDITION TO THE LOADS INDICATED, JOISTS AND JOIST GIRDERS SHALL BE DESIGNED FOR ALL SPECIAL LOADS INDICATED ON THE PLANS AND DETAILS, INCLUDING THE MECHANICAL LOADS IDENTIFIED ON THE PLANS.
3. DEFLECTIONS OF ALL MEMBERS SHALL BE LIMITED TO L/360 FOR LIVE LOADS AND L/240 FOR TOTAL LOADS, U.N.O.
4. PROVIDE SJI STANDARD CAMBER U.N.O.
5. PROVIDE ALL REQUIRED BRIDGING FOR THE SPANS AND LOADING SHOWN WHETHER INDICATED ON PLANS OR NOT. WHERE INDICATED ON PLANS, LINES OF BRIDGING ARE APPROXIMATE AND SHALL BE ADJUSTED AS NECESSARY BY THE JOIST MANUFACTURER FOR THEIR FINAL DESIGN. THE CONTRACTOR AND JOIST MANUFACTURER SHALL COORDINATE THE LOCATIONS OF BRIDGING WITH MECHANICAL DUCTS, PIPING, OR OTHER ITEMS TO AVOID CONFLICTS. USE X-BRIDGING OR DIAGONAL BRACING AS REQUIRED AT LOCATIONS WHERE LINES OF BRIDGING MUST BE INTERRUPTED BECAUSE OF MECHANICAL DUCTWORK OR OTHER OBSTRUCTIONS. SEE TYPICAL BRIDGING DETAILS.
6. ALL JOISTS SHALL HAVE SEAT DEPTHS (SLOPING WHERE REQUIRED) AND TOP CHORD EXTENSIONS AS INDICATED IN PLANS AND DETAILS.
7. REINFORCE JOISTS PER TYPICAL DETAILS WHERE CONCENTRATED LOADS ARE APPLIED TO JOIST CHORDS FURTHER THAN 6" AWAY FROM PANEL POINTS.
8. JOISTS SHALL BE DESIGNED WITH CLEARANCES AS REQUIRED WHERE DUCTWORK PASSES THROUGH WEB SPACE. THE CONTRACTOR SHALL BE RESPONSIBLE FOR THE FINAL LAYOUT OF THESE DUCTS AND FOR COMMUNICATING THESE REQUIREMENTS TO THE JOIST MANUFACTURER.
9. ALL "LH" SERIES JOISTS SHALL BE PROVIDED WITH A 7 1/2" HIGH BEARING SEAT AS SHOWN ON THE STRUCTURAL DETAILS.
10. JOISTS SHALL BE DESIGNED FOR THE FOLLOWING LOADS:

LOAD CASE	LOAD
DEAD LOAD	20 PSF AT 1 1/2" DECK
ROOF SNOW LOAD	23 PSF
WIND UPLIFT (ALLOWABLE)	SEE UPLIFT DIAGRAM
TOP CHORD AND JOIST SEAT AXIAL LOAD (0.6W OR 0.7E WALL ANCHORAGE)	SEE JOIST BEARING SEAT SCHEDULE
JOIST ADD LIVE LOAD ANYWHERE ALONG TOP OR BOTTOM CHORDS (ALL JOISTS AT OR BETWEEN PANEL POINTS)	500 LBS. U.N.O.

ADD LOADS

LOAD CASE	D (DOWN)	0.6W (UP)	0.6W (DOWN)	0.7E (UP OR DOWN)	U (UP)
LC1			.13 K		.12 K
LC2			.25 K		.23 K
LC3			.25 K		.16 K
LC4			.12 K		.16 K
LC5					
LC6					

NOTE:
1. SEE DETAIL 17 / S0.7 FOR TYP. GIRDER BRACE TO JOIST AND ROOF FRAMING PLAN FOR BRACE LOCATIONS.

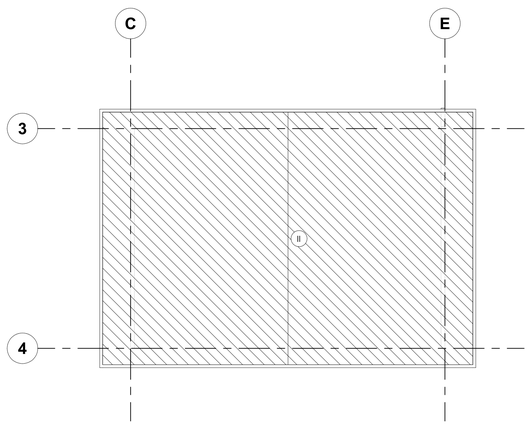

3 ATTACHMENT ZONE DIAGRAM - HIGH ROOF
1/16" = 1'-0"

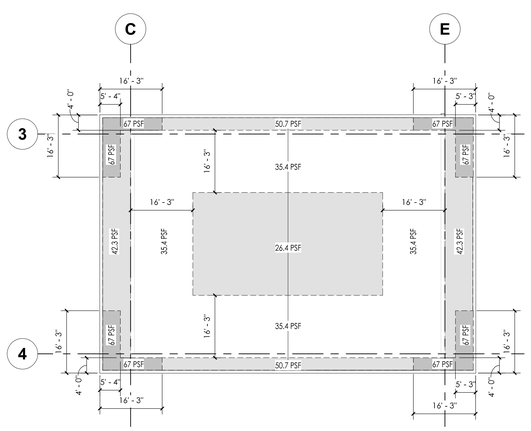

2 WIND UPLIFT DIAGRAM (0.6W) - HIGH ROOF
1/16" = 1'-0"

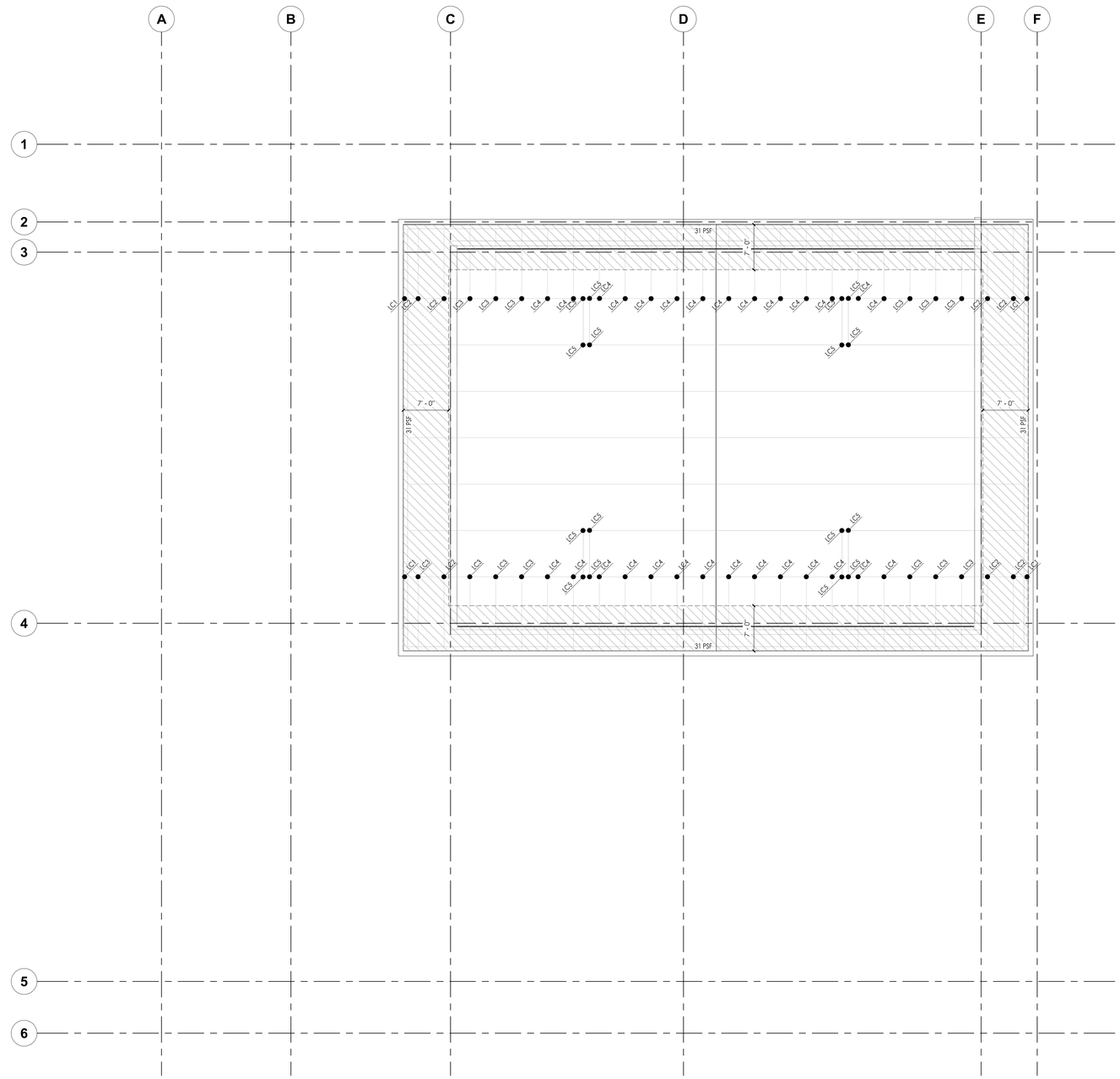

1 HIGH ROOF JOIST LOADING PLAN
1/8" = 1'-0"

GENERAL NOTES

KEYNOTES

LEGEND

MECHANICAL EQUIPMENT, SEE MECH.

ROOF DECK OPENING, REINFORCE PER DETAIL. COORDINATE WITH MECHANICAL.

LC# — JOIST POINT ADD LOADS PER ADD LOADS SCHEDULE

LC# — JOIST DISTRIBUTED ADD LOADS PER ADD LOADS SCHED.

SNOW LOADING LEGEND

UNIFORM SNOW LOAD = 23 PSF

TAPERED SNOW DRIFT LOADS PER PLAN

DRIFT LOAD

UNIFORM SNOW LOAD = 23 PSF

DRIFT LENGTH

tsk
225 South Arlington Avenue,
Suite A
Reno NV, 89501
phone: 775.857.2949
fax: 775.857.2403
www.tska.com

PROFESSIONAL ENGINEER - STATE OF NEVADA
BOISE ROBERT KYLE WILCOX
Exp: 6-30-24
CIVIL/STRUCTURAL
No. 19779
01/04/2024

THESE DRAWINGS AND SPECIFICATIONS ARE THE PROPERTY OF TATE SNYDER KIMSEY ARCHITECTS AND MAY NOT BE REPRODUCED OR USED FOR ANY PURPOSE WITHOUT THE ARCHITECTS WRITTEN CONSENT. AS INSTRUMENTS OF SERVICE, THESE DOCUMENTS ARE NOT FINAL AND READY FOR USE, AND THEREFORE NOT VALID, UNLESS THEY ARE SEALED, SIGNED AND DATED.

Copyright, Ltd 2023

Consultant

NELSON WILCOX
STRUCTURAL ENGINEERS
225 S. Arlington Ave, Ste B
Reno, Nevada 89501
(775)-848-3166
(702)-290-5760

NWSE Project No: 20220057

PLEASE RECYCLE

Project
SPARKS Fire Station #6

6963 SCHEIDBAR ROAD, SPARKS NEVADA 89436

Job No: 22-043

Owner
CITY OF SPARKS

CITY OF SPARKS FIRE DEPARTMENT Est. 1905

BID SET

REVISIONS

REV	DATE	DESCRIPTION

Sheet Title
HIGH ROOF JOIST LOADING PLAN

Date: 01/04/2024
Sheet No:
S6

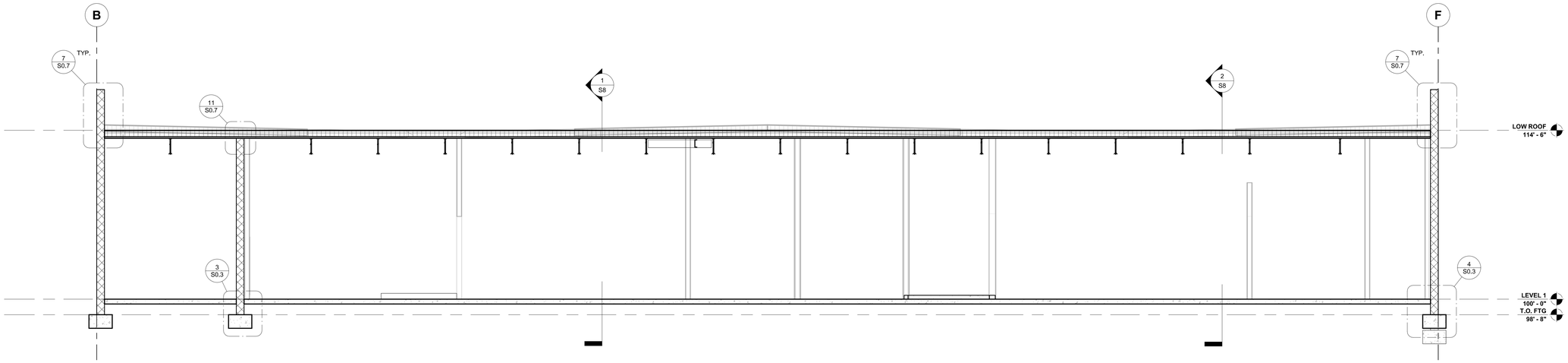

1 STRUCTURAL SECTION 1

1/4" = 1'-0"

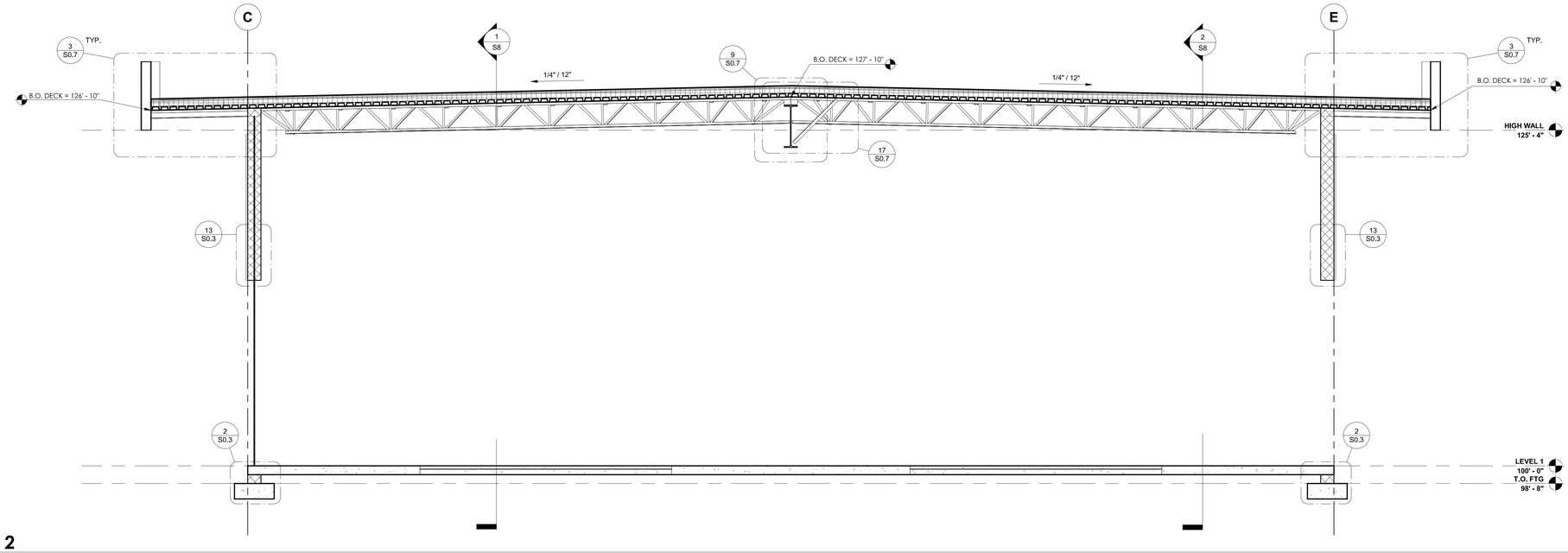

2 STRUCTURAL SECTION 2

1/4" = 1'-0"

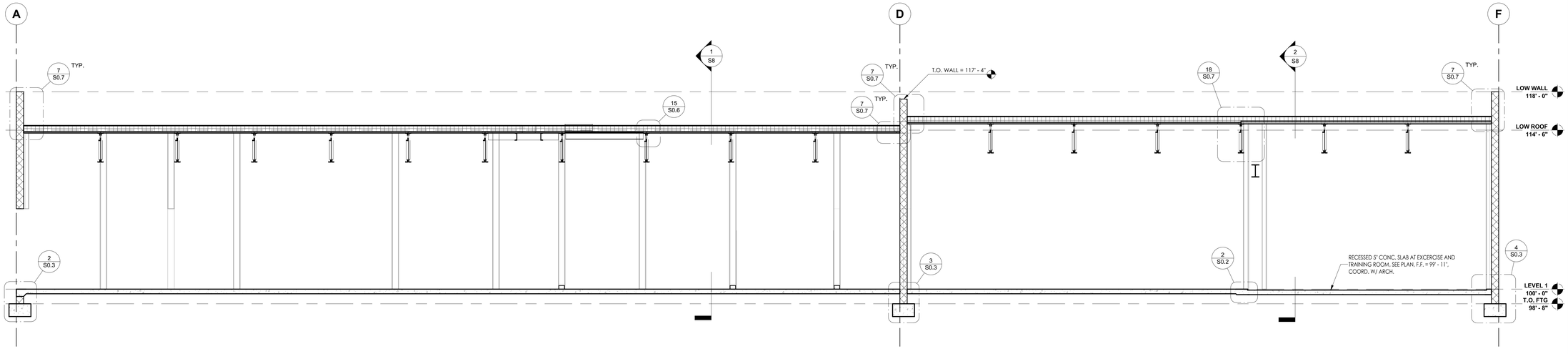

3 STRUCTURAL SECTION 3

1/4" = 1'-0"

tsk

225 South Arlington Avenue,
Suite A
Reno NV, 89501
phone: 775.857.2949
fax: 775.857.2403
www.tska.com

PROFESSIONAL ENGINEER - STATE OF NEVADA
BOISE
ROBERT KYLE WILCOX
Exp: 6-30-24
CIVIL/STRUCTURAL
No. 19779
01/04/2024

THESE DRAWINGS AND SPECIFICATIONS ARE THE PROPERTY OF TATE SNYDER KIMSEY ARCHITECTS AND MAY NOT BE REPRODUCED OR USED FOR ANY PURPOSE WITHOUT THE ARCHITECTS WRITTEN CONSENT. AS INSTRUMENTS OF SERVICE, THESE DOCUMENTS ARE NOT FINAL AND READY FOR USE, AND THEREFORE NOT VALID, UNLESS THEY ARE SEALED, SIGNED AND DATED.

Copyright, Ltd 2023

Consultant

NELSON WILCOX
STRUCTURAL ENGINEERS
225 S. Arlington Ave, Ste B
Reno, Nevada 89501
(775)-848-3166
(702)-290-5760

NWSE Project No: 20220057

PLEASE RECYCLE

Project

SPARKS Fire Station #6

6963 SCHEIDBAR ROAD, SPARKS NEVADA 89436

Job No: 22-043

Owner

CITY OF SPARKS

BID SET

REVISIONS		
REV	DATE	DESCRIPTION

Sheet Title

STRUCTURAL SECTIONS

Date: 01/04/2024

Sheet No:

S7

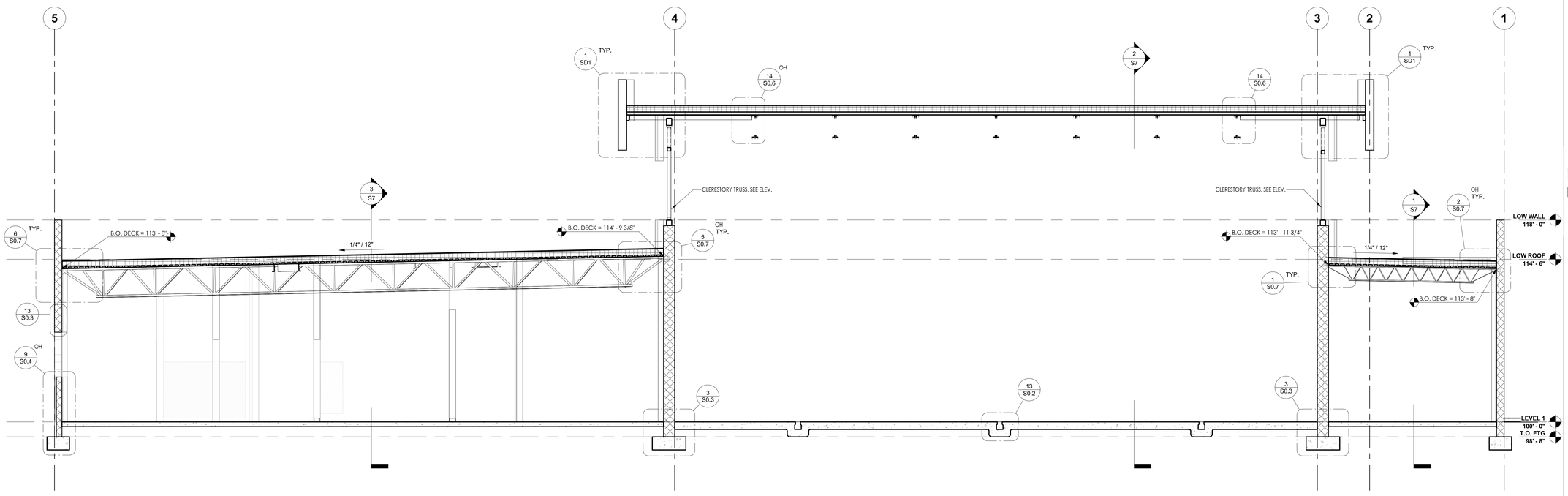

1 STRUCTURAL SECTION 4

1/4" = 1'-0"

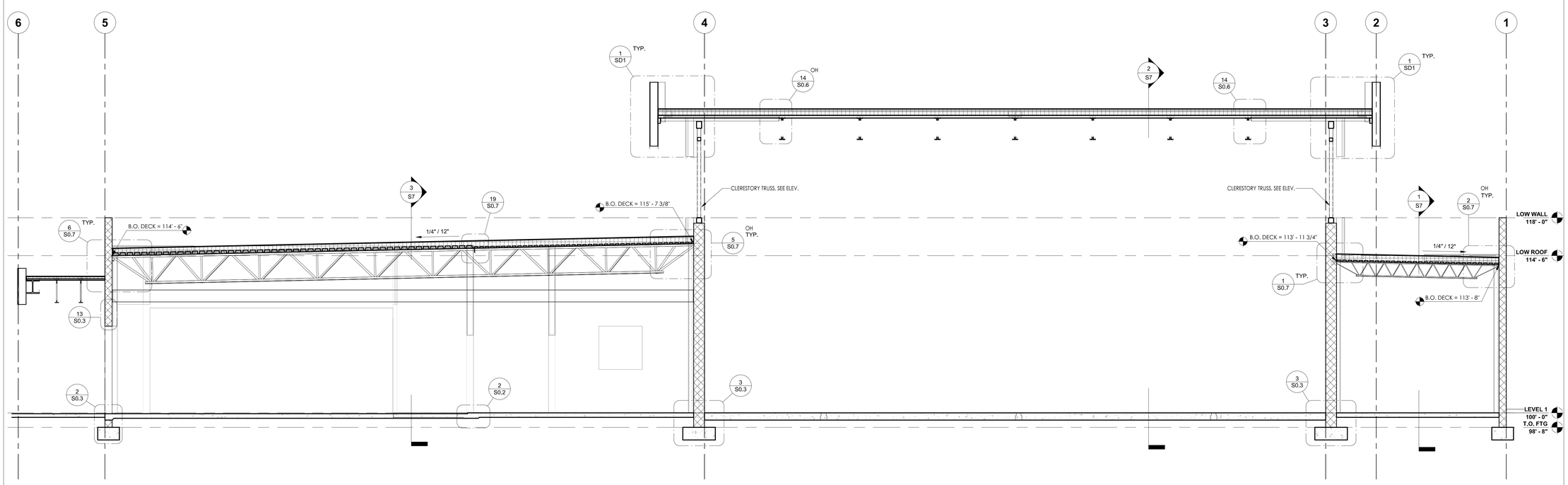

2 STRUCTURAL SECTION 5

1/4" = 1'-0"

tsk

225 South Arlington Avenue,
Suite A
Reno NV, 89501
phone: 775.857.2949
fax: 775.857.2403
www.tska.com

PROFESSIONAL ENGINEER - STATE OF NEVADA
BOISE ROBERT KYLE WILCOX
Exp: 6-30-24
CIVIL/STRUCTURAL
No. 19779
01/04/2024

THESE DRAWINGS AND SPECIFICATIONS ARE THE PROPERTY OF TATE SNYDER KIMSEY ARCHITECTS AND MAY NOT BE REPRODUCED OR USED FOR ANY PURPOSE WITHOUT THE ARCHITECTS WRITTEN CONSENT. AS INSTRUMENTS OF SERVICE, THESE DOCUMENTS ARE NOT FINAL AND READY FOR USE, AND THEREFORE NOT VALID, UNLESS THEY ARE SEALED, SIGNED AND DATED.

Copyright, Ltd 2023

Consultant

NELSON WILCOX
STRUCTURAL ENGINEERS
225 S. Arlington Ave, Ste B (775)-848-3166
Reno, Nevada 89501 (702)-290-5760

NWSE Project No: 20220057

PLEASE RECYCLE

Project

SPARKS Fire Station #6

6963 SCHEIDBAR ROAD, SPARKS NEVADA 89436

Job No: 22-043

Owner

CITY OF SPARKS

BID SET

REVISIONS		
REV	DATE	DESCRIPTION

Sheet Title

STRUCTURAL SECTIONS

Date: 01/04/2024

Sheet No:

S8

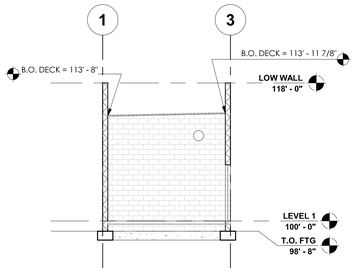

3 WALL ELEV. - PARTITION (LOOKING EAST)
1/8" = 1'-0"

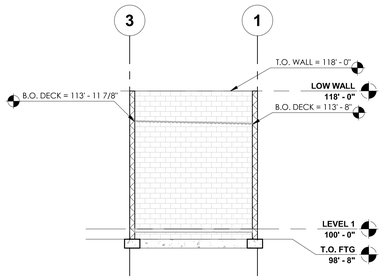

2 WALL ELEV. - GRID B (LOOKING WEST)
1/8" = 1'-0"

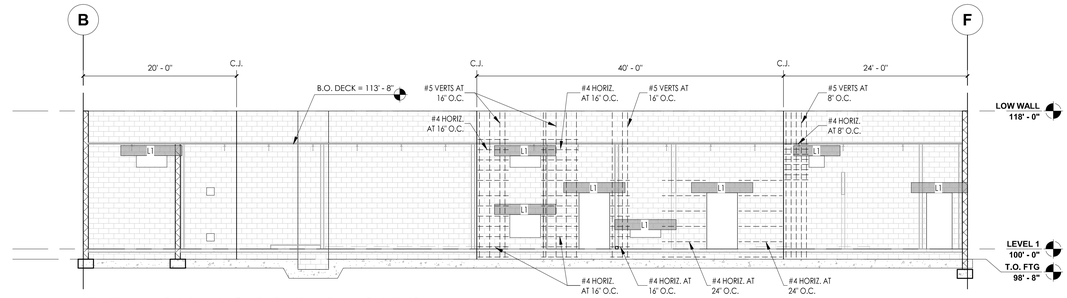

1 WALL ELEV. - GRID 1 (LOOKING NORTH)
1/8" = 1'-0"

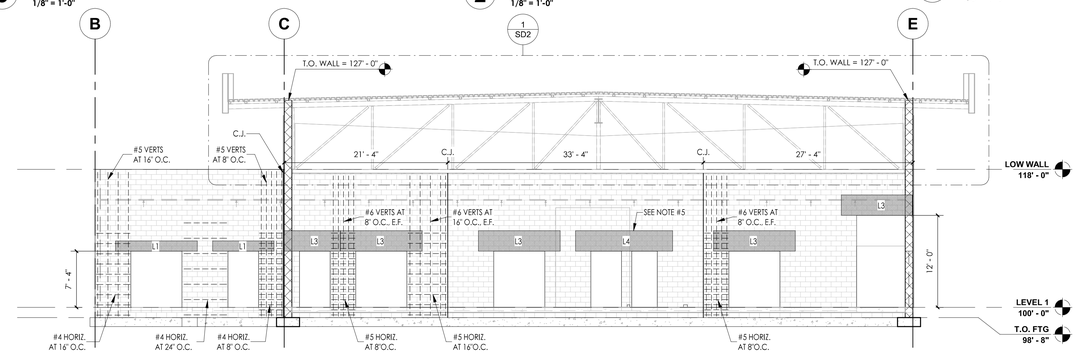

6 WALL ELEV. - GRID 3 (LOOKING NORTH)
1/8" = 1'-0"

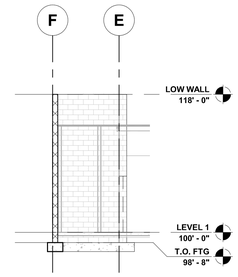

5 WALL ELEV. - GRID 2 (LOOKING SOUTH)
1/8" = 1'-0"

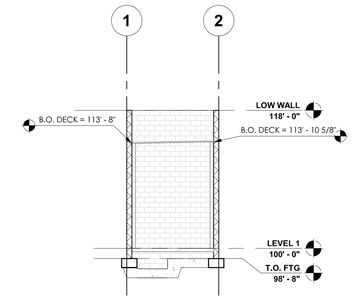

4 WALL ELEV. = GRID F (LOOKING EAST)
1/8" = 1'-0"

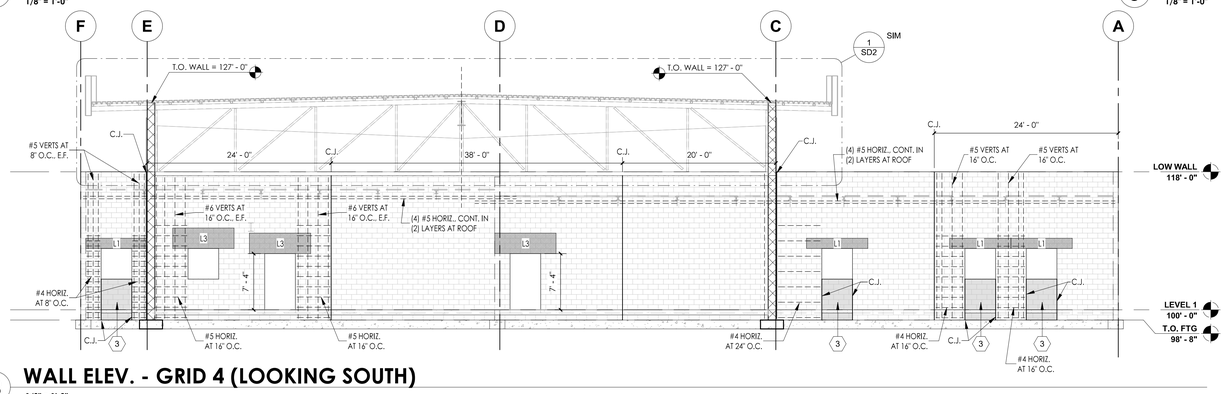

8 WALL ELEV. - GRID 4 (LOOKING SOUTH)
1/8" = 1'-0"

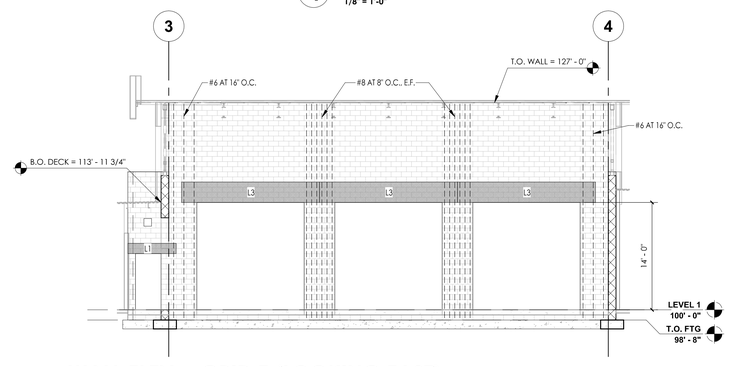

7 WALL ELEV. - GRID E (LOOKING EAST)
1/8" = 1'-0"

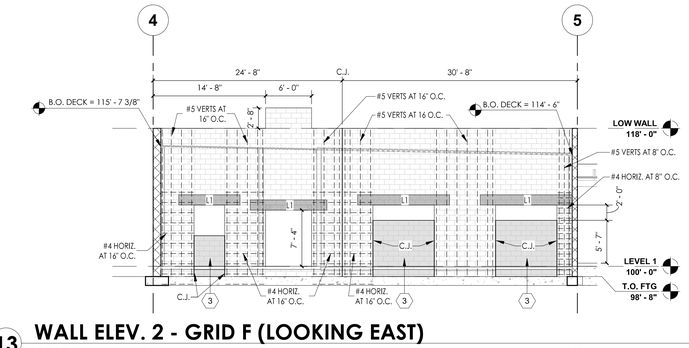

13 WALL ELEV. 2 - GRID F (LOOKING EAST)
1/8" = 1'-0"

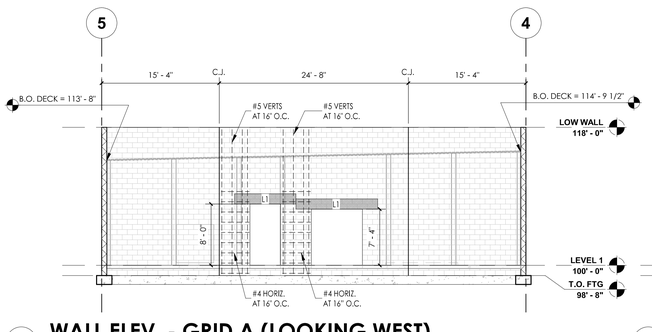

10 WALL ELEV. - GRID A (LOOKING WEST)
1/8" = 1'-0"

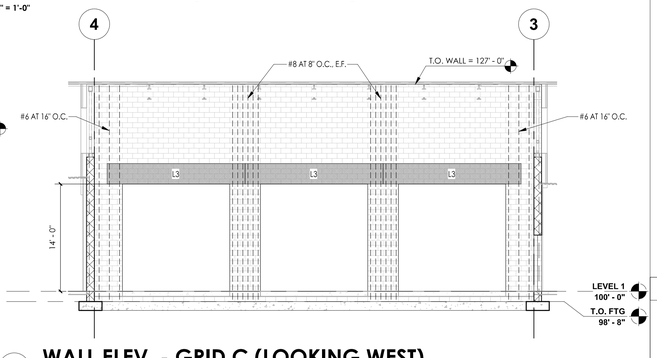

9 WALL ELEV. - GRID C (LOOKING WEST)
1/8" = 1'-0"

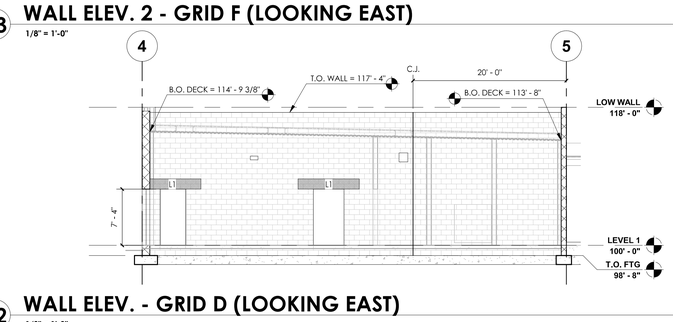

12 WALL ELEV. - GRID D (LOOKING EAST)
1/8" = 1'-0"

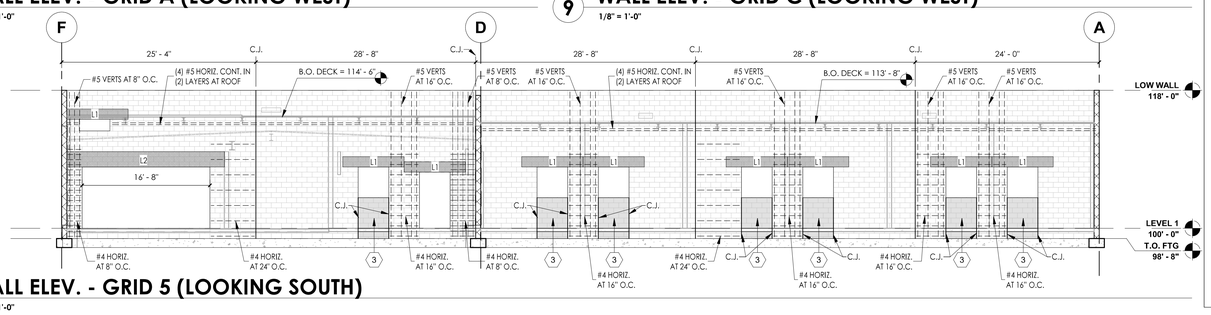

11 WALL ELEV. - GRID 5 (LOOKING SOUTH)
1/8" = 1'-0"

GENERAL NOTES

1. WALL OPENINGS LESS THAN 12' IN WIDTH AND/OR HEIGHT NEED NO SPECIAL REINFORCING AND THEREFORE ARE NOT SHOWN FOR CLARITY.
2. COORDINATE ALL MECH./PLUMBING OPENINGS WITH MECH.
3. CONTRACTOR SHALL PROVIDE VERTICAL CONTROL JOINTS (C.J.) IN MASONRY WALLS IN ACCORDANCE WITH DETAIL 5 / S0.3 AT LOCATIONS SHOWN ON ELEVATIONS.
4. ADDITIONAL HORIZONTAL REINFORCEMENT AT CMU PIERS TO EXTEND 32" ABOVE AND BELOW THE ADJACENT WINDOW OPENING(S) AND 32" ABOVE THE ADJACENT DOOR OPENINGS.
5. WHERE THE LENGTH OF A WALL PIER BETWEEN OPENINGS IS LESS THAN 3X THE NOMINAL WALL THICKNESS, THE LINTEL REINFORCING SHALL BE CONTINUOUS OVER THE WALL PIER.
6. ADDITIONAL VERTICAL AND HORIZONTAL REINFORCING SHOWN ON WALL ELEVATIONS SHALL BE USED IN PLACE OF TYPICAL WALL REINFORCING SPECIFIED IN WALL SCHEDULE.
7. WHERE ADDITIONAL VERTICAL BARS SHOWN ON ELEVATIONS COINCIDE WITH TYPICAL JAMB REINFORCING, THE LARGER QUANTITIY OR LARGER BAR DIAMETER SHALL BE USED.

KEYNOTES

3 6" CMU UNDER WINDOW PER PLANS AND WALL ELEVATIONS. VERIFY LOCATIONS WITH ARCH. REFER TO DETAIL 9/S0.4.

LEGEND

6" CMU. VERIFY LOCATIONS WITH ARCH. SEE DETAIL 9 / S0.4.

ADDITIONAL REINFORCING

C.J. CMU CONTROL JOINT. SEE DETAIL 5 / S0.3 .

L# LINTEL PER SCHEDULE

tsk
225 South Arlington Avenue,
Suite A
Reno NV, 89501
phone: 775.857.2949
fax: 775.857.2403
www.tska.com

PROFESSIONAL ENGINEER - STATE OF NEVADA
BOISE
ROBERT KYLE WILCOX
Exp: 6-30-24
CIVIL/STRUCTURAL
No. 19778
01/04/2024

THESE DRAWINGS AND SPECIFICATIONS ARE THE PROPERTY OF TATE SNYDER KIMSEY ARCHITECTS AND MAY NOT BE REPRODUCED OR USED FOR ANY PURPOSE WITHOUT THE ARCHITECTS WRITTEN CONSENT. AS INSTRUMENTS OF SERVICE, THESE DOCUMENTS ARE NOT FINAL AND READY FOR USE, AND THEREFORE NOT VALID, UNLESS THEY ARE SEALED, SIGNED AND DATED.

Copyright, Ltd 2023

Consultant

NELSON WILCOX
STRUCTURAL ENGINEERS
225 S. Arlington Ave, Ste B
Reno, Nevada 89501
(775)-848-3166
(702)-290-5760

NWSE Project No: 20220057

PLEASE RECYCLE

Project
SPARKS Fire Station #6

6963 SCHEIDBAR ROAD, SPARKS NEVADA 89436

Job No: 22-043

Owner
CITY OF SPARKS

CITY OF SPARKS FIRE DEPARTMENT Est. 1905

BID SET

REVISIONS

REV	DATE	DESCRIPTION

Sheet Title
STRUCTURAL WALL ELEVATIONS

Date: 01/04/2024
Sheet No:
S9

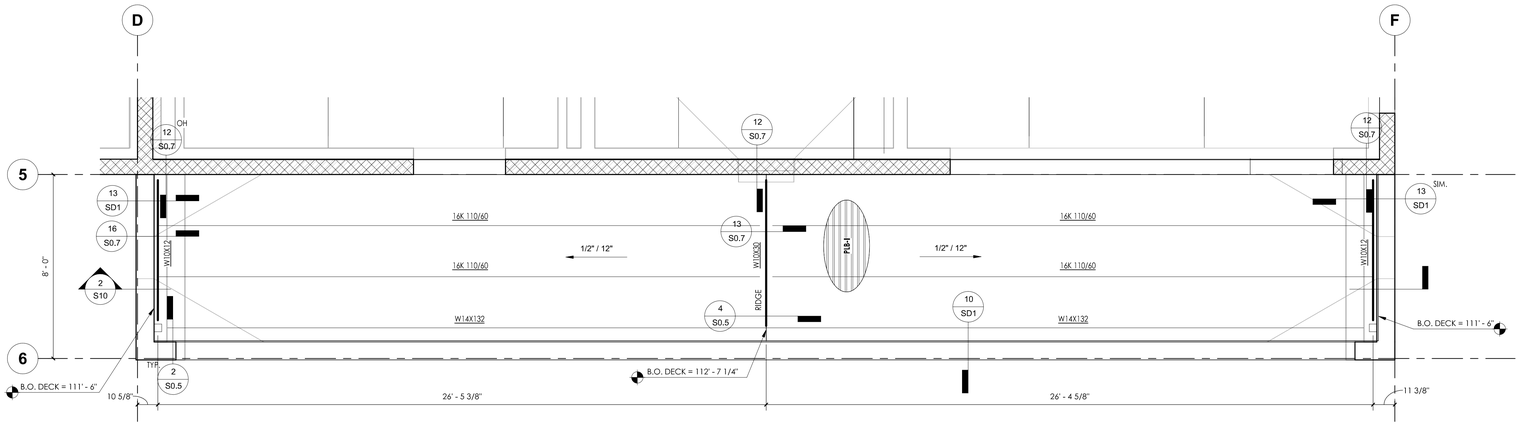

1 ENLARGED SOUTH CANOPY FRAMING PLAN

3/8" = 1'-0"

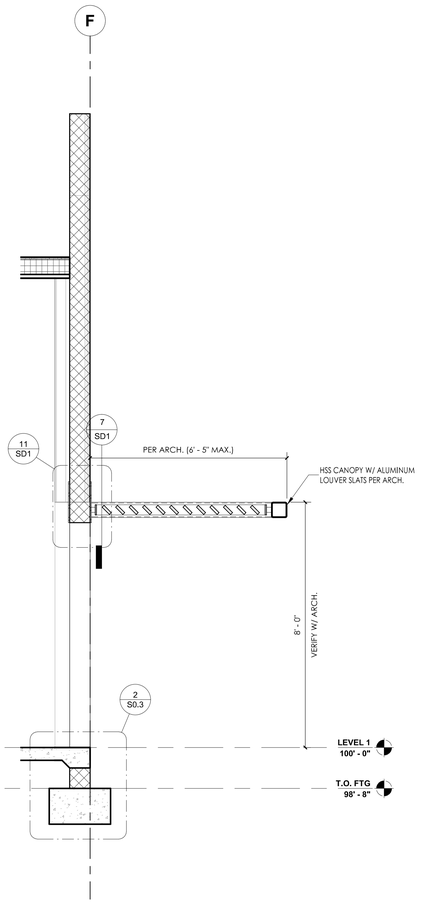

3 ENTRY CANOPY SECTION

1/2" = 1'-0"

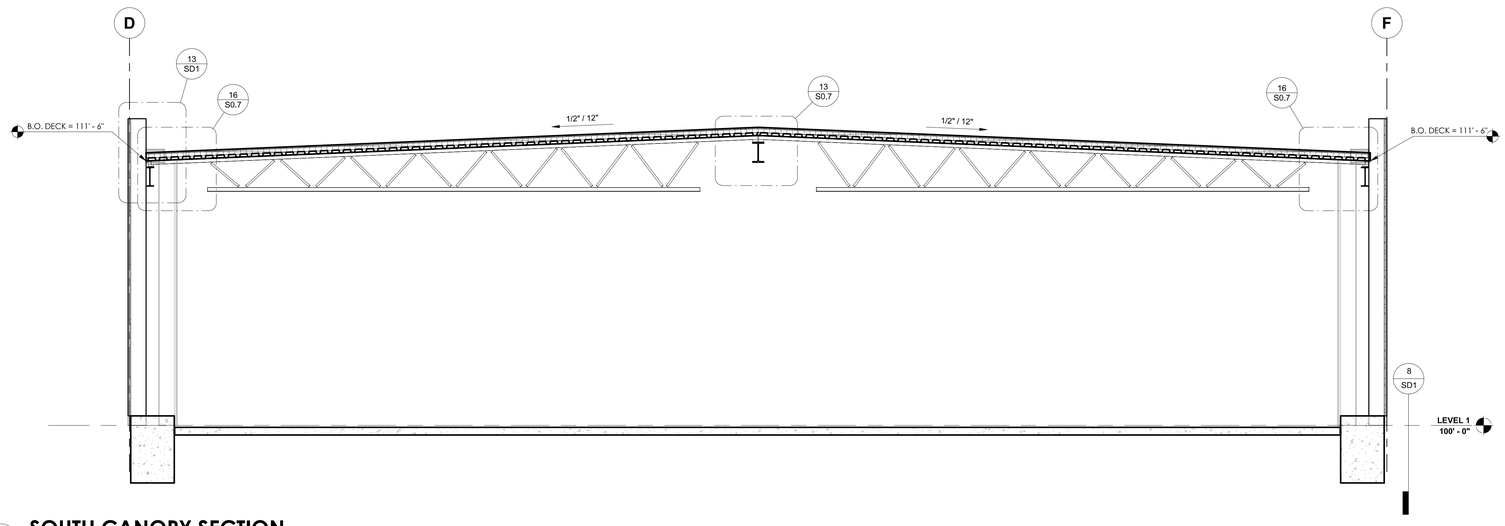

2 SOUTH CANOPY SECTION

3/8" = 1'-0"

tsk

225 South Arlington Avenue,
Suite A
Reno NV, 89501
phone: 775.857.2949
fax: 775.857.2403
www.tska.com

PROFESSIONAL ENGINEER - STATE OF NEVADA
BOISE
ROBERT KYLE WILCOX
Exp: 6-30-24
CIVIL/STRUCTURAL
No. 19779
01/04/2024

THESE DRAWINGS AND SPECIFICATIONS ARE THE PROPERTY OF TATE SNYDER KIMSEY ARCHITECTS AND MAY NOT BE REPRODUCED OR USED FOR ANY PURPOSE WITHOUT THE ARCHITECTS WRITTEN CONSENT. AS INSTRUMENTS OF SERVICE, THESE DOCUMENTS ARE NOT FINAL AND READY FOR USE, AND THEREFORE NOT VALID, UNLESS THEY ARE SEALED, SIGNED AND DATED.

Copyright, Ltd 2023

Consultant

NELSON WILCOX
STRUCTURAL ENGINEERS
225 S. Arlington Ave, Ste B
Reno, Nevada 89501
(775)-848-3166
(702)-290-5760

NWSE Project No: 20220057

PLEASE RECYCLE

Project

SPARKS Fire Station #6

6963 SCHEIDBAR ROAD, SPARKS NEVADA 89436

Job No: 22-043

Owner

CITY OF SPARKS

CITY OF SPARKS FIRE DEPARTMENT Est. 1905

BID SET

REVISIONS

REV	DATE	DESCRIPTION

Sheet Title

CANOPY ENLARGED PLANS AND SECTIONS

Date: 01/04/2024

Sheet No:

S10

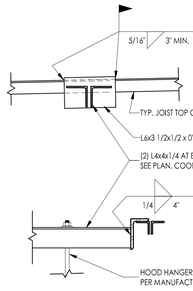

SIDE VIEW

12 ANGLES TO JOIST AT HOOD MOUNT
1" = 1'-0"

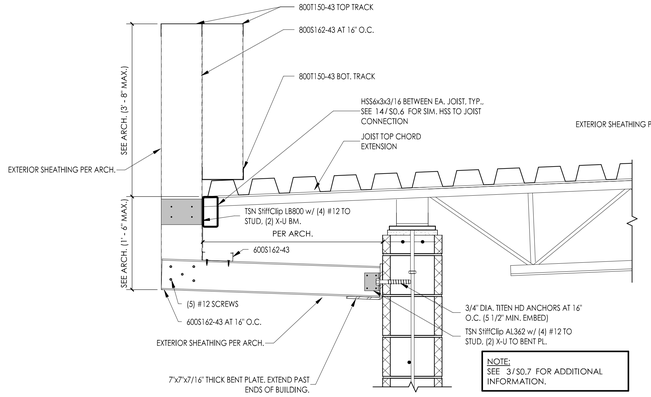

9 CFS FRAMING AT ENDS OF JOISTS
1" = 1'-0"

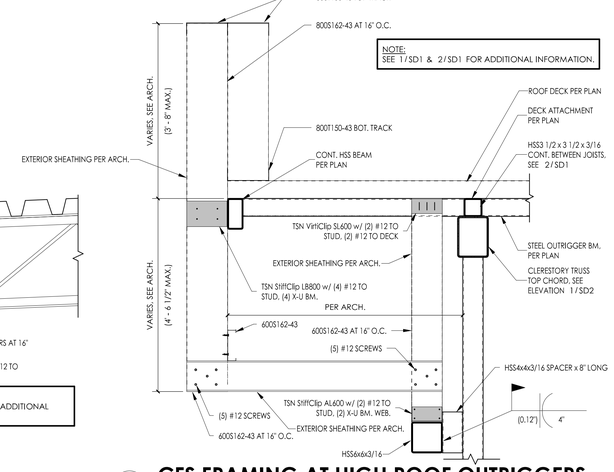

5 CFS FRAMING AT HIGH ROOF OUTRIGGERS
1" = 1'-0"

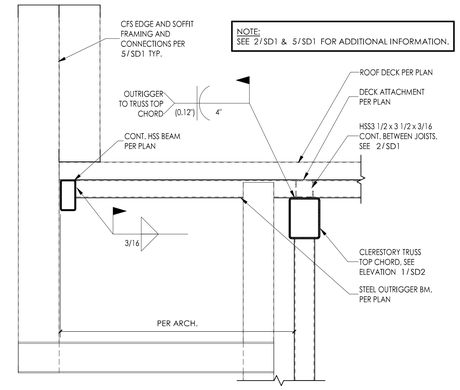

1 OUTRIGGER TO T.O. TRUSS
1" = 1'-0"

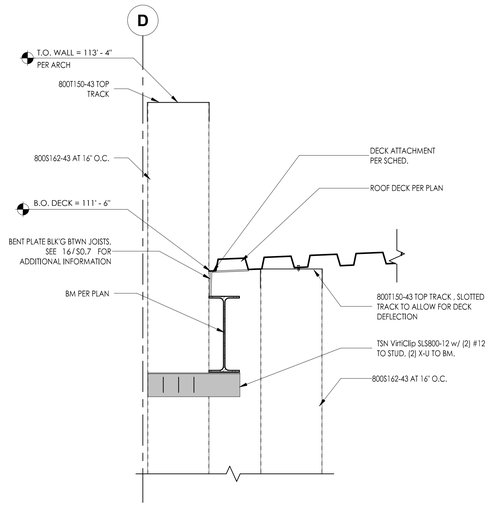

13 CFS FRAMING AT PATIO - GRID D & F
1 1/2" = 1'-0"

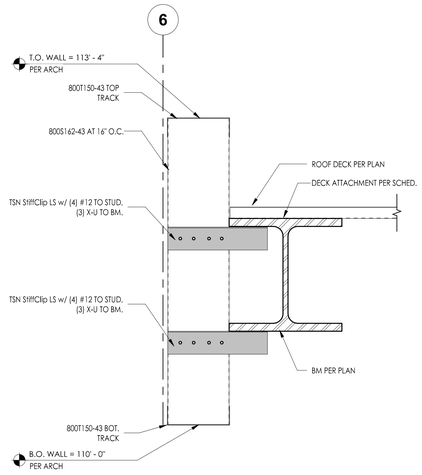

10 CFS FRAMING AT PATIO - GRID 6
1 1/2" = 1'-0"

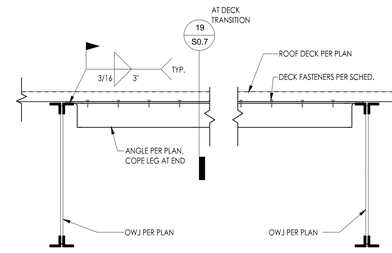

6 ANGLE AT ROOF DECK
1" = 1'-0"

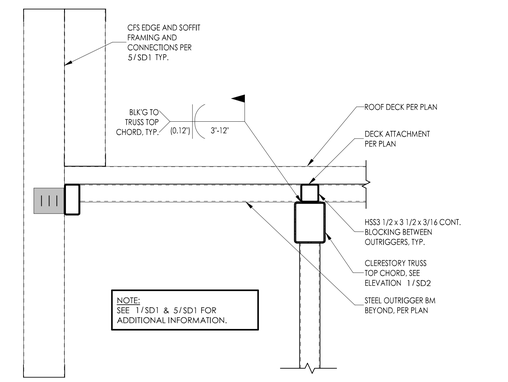

2 BLOCKING BETWEEN OUTRIGGERS
1" = 1'-0"

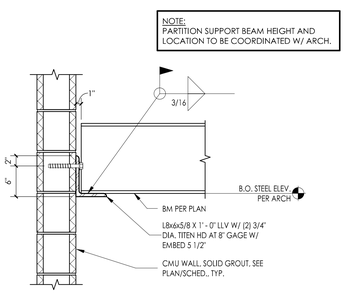

14 PARTITION DOOR SUPPORT BEAM TO CMU
1" = 1'-0"

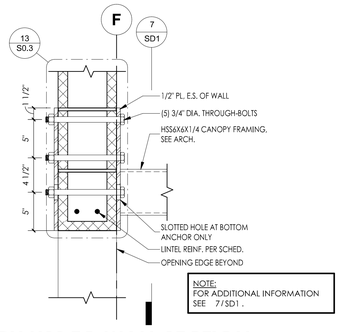

11 CANOPY HSS TO WALL SECTION
1 1/2" = 1'-0"

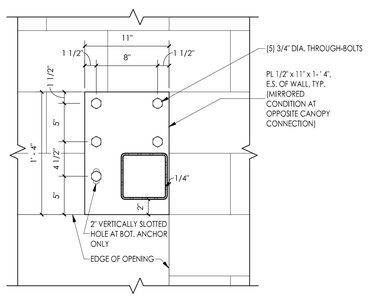

7 CANOPY HSS TO WALL CONN.
1 1/2" = 1'-0"

SECTION A-A

3 ANGLE TO WALL AT LEDGER
1" = 1'-0"

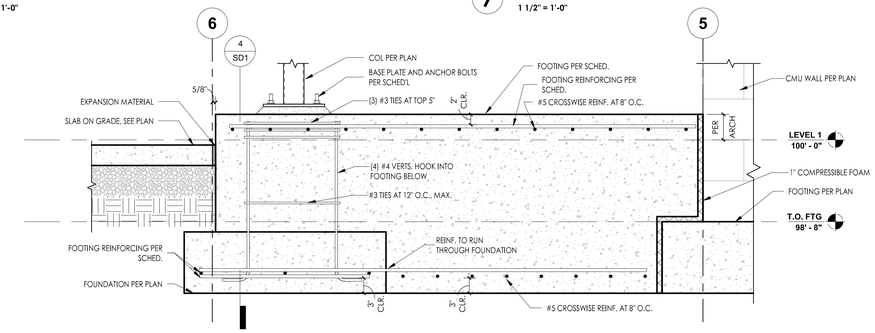

8 PIER AT CANOPY - PERPENDICULAR VIEW
1" = 1'-0"

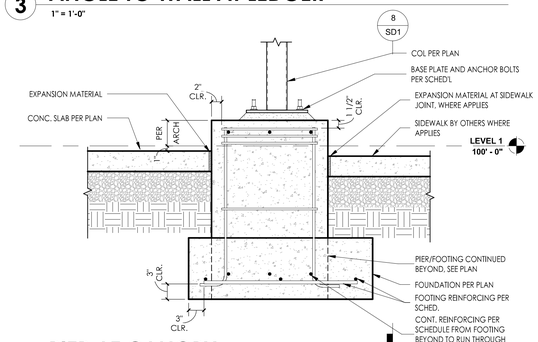

4 PIER AT CANOPY
1" = 1'-0"

tsk
225 South Arlington Avenue,
Suite A
Reno NV, 89501
phone: 775.857.2949
fax: 775.857.2403
www.tska.com

PROFESSIONAL ENGINEER - STATE OF NEVADA
BOISE, IDAHO
ROBERT KYLE WILCOX
Exp: 6-30-24
CIVIL/STRUCTURAL
No. 19779
01/04/2024

THESE DRAWINGS AND SPECIFICATIONS ARE THE PROPERTY OF TATE SNYDER KIMSEY ARCHITECTS AND MAY NOT BE REPRODUCED OR USED FOR ANY PURPOSE WITHOUT THE ARCHITECTS WRITTEN CONSENT. AS INSTRUMENTS OF SERVICE, THESE DOCUMENTS ARE NOT FINAL AND READY FOR USE, AND THEREFORE NOT VALID, UNLESS THEY ARE SEALED, SIGNED AND DATED.

Copyright, Ltd 2023

Consultant

NELSON WILCOX
STRUCTURAL ENGINEERS
225 S. Arlington Ave, Ste B
Reno, Nevada 89501
(775)-848-3166
(702)-290-5760

NWSE Project No: 20220057

PLEASE RECYCLE

Project
SPARKS Fire Station #6

6963 SCHEIDBAR ROAD, SPARKS NEVADA 89436

Job No: 22-043

Owner
CITY OF SPARKS

BID SET

REVISIONS		
REV	DATE	DESCRIPTION
A	05.18.23	Review Comments

Sheet Title
STRUCTURAL DETAILS

Date: 01/04/2024

Sheet No:
SD1

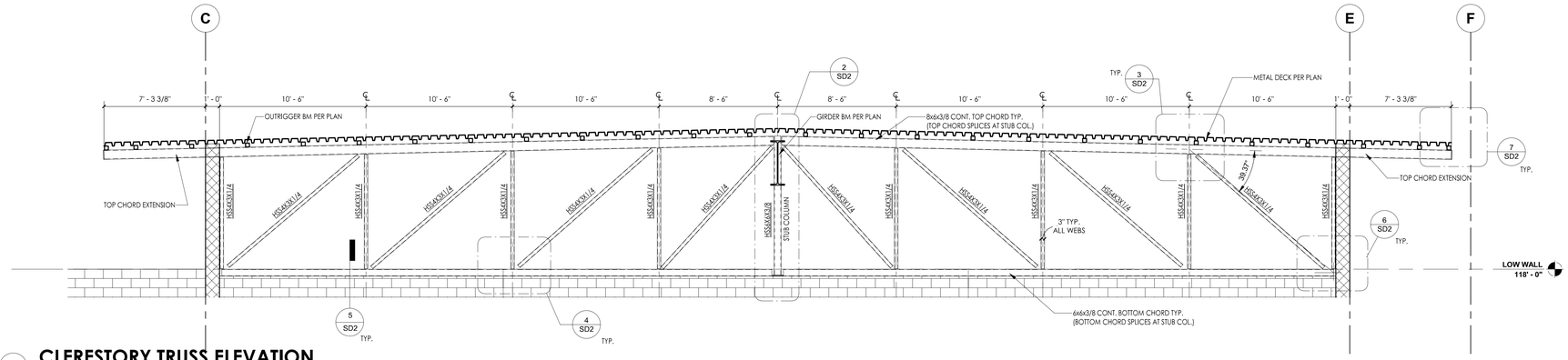

1 CLERESTORY TRUSS ELEVATION
1/4" = 1'-0"

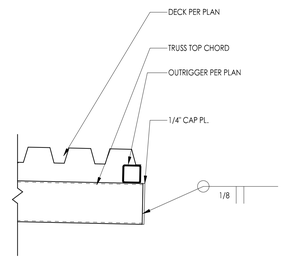

7 END CONDITION 2
1" = 1'-0"

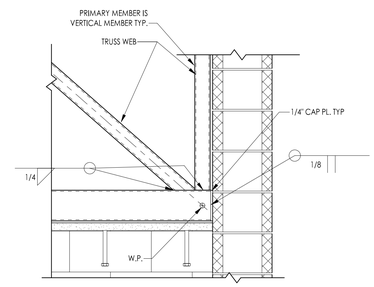

6 END CONDITION 1
1" = 1'-0"

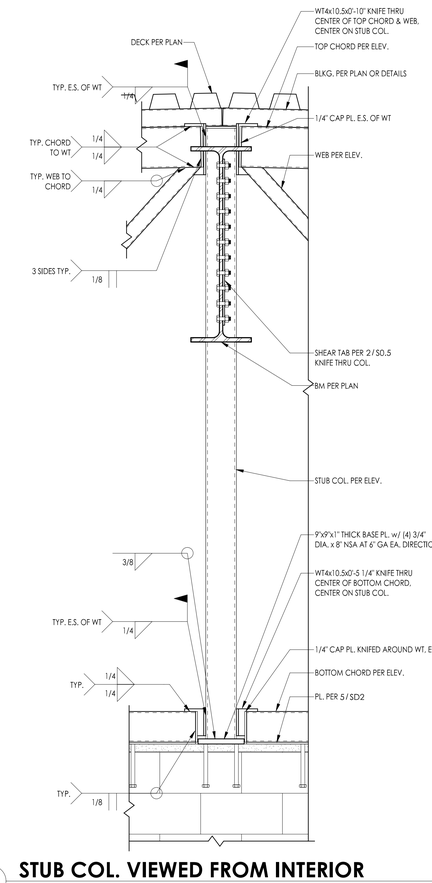

2 STUB COL. VIEWED FROM INTERIOR
1" = 1'-0"

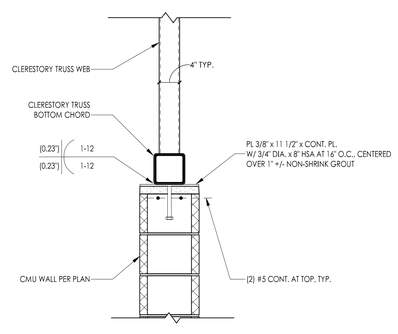

5 CLERESTORY TRUSS BASE CONNECTION
1" = 1'-0"

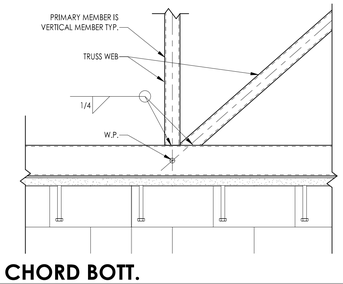

4 WEB TO CHORD BOTT.
1" = 1'-0"

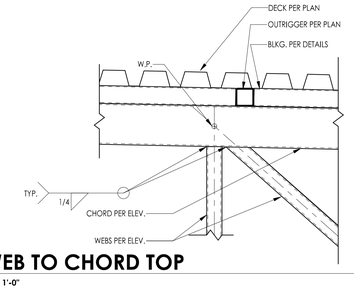

3 WEB TO CHORD TOP
1" = 1'-0"

tsk
225 South Arlington Avenue,
Suite A
Reno NV, 89501
phone: 775.857.2949
fax: 775.857.2403
www.tska.com

PROFESSIONAL ENGINEER - STATE OF NEVADA
ROBERT KYLE WILCOX
Exp: 6-30-24
CIVIL/STRUCTURAL
No. 19779
01/04/2024

THESE DRAWINGS AND SPECIFICATIONS ARE THE PROPERTY OF TATE SNYDER KIMSEY ARCHITECTS AND MAY NOT BE REPRODUCED OR USED FOR ANY PURPOSE WITHOUT THE ARCHITECTS WRITTEN CONSENT. AS INSTRUMENTS OF SERVICE, THESE DOCUMENTS ARE NOT FINAL AND READY FOR USE, AND THEREFORE NOT VALID, UNLESS THEY ARE SEALED, SIGNED AND DATED.

Copyright, Ltd 2023

Consultant

NELSON WILCOX
STRUCTURAL ENGINEERS
225 S. Arlington Ave, Ste B
Reno, Nevada 89501
(775)-848-3166
(702)-290-5760

NWSE Project No: 20220057

PLEASE RECYCLE

Project
SPARKS Fire Station #6

6963 SCHEIDBAR ROAD, SPARKS NEVADA 89436

Job No: 22-043

Owner
CITY OF SPARKS

BID SET

REVISIONS

REV	DATE	DESCRIPTION

Sheet Title
CLERESTORY TRUSS ELEVATIONS AND DETAILS

Date: 01/04/2024
Sheet No:
SD2

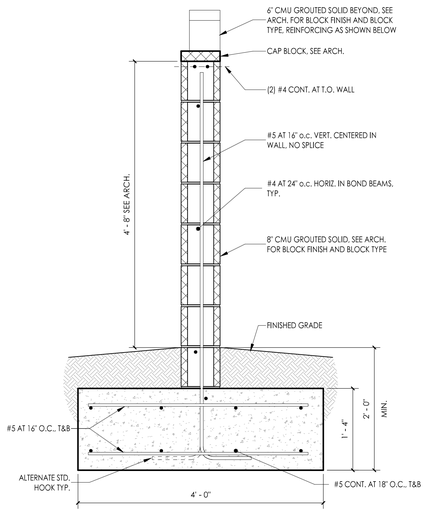

9 CMU FREE-STANDING MONUMENT SIGN SECTION
1" = 1'-0"

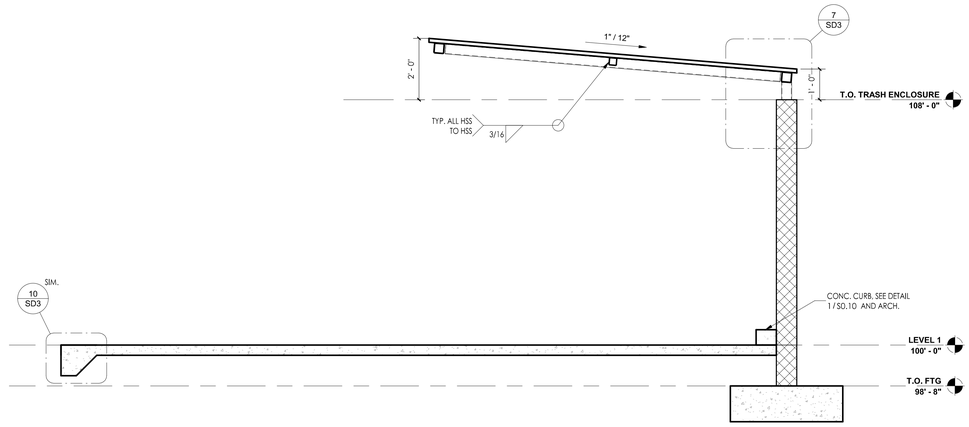

5 TRASH ENCLOSURE SECTION 1
1/2" = 1'-0"

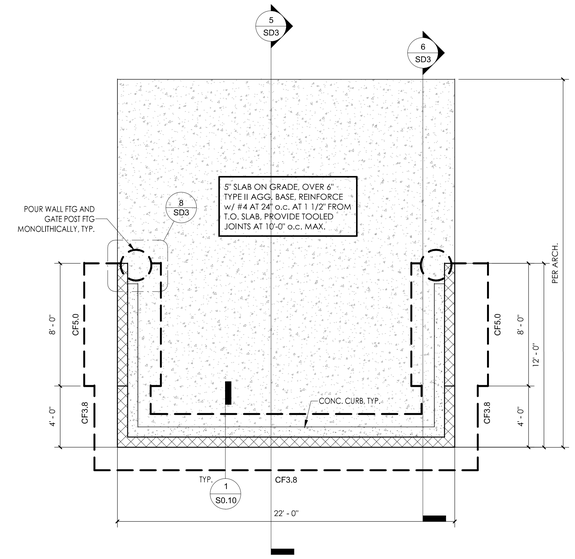

1 ENLARGED TRASH ENCLOSURE FND PLAN
1/4" = 1'-0"

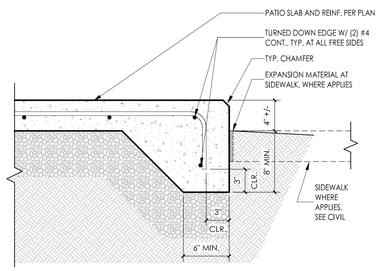

10 PATIO SLAB EDGE
1 1/2" = 1'-0"

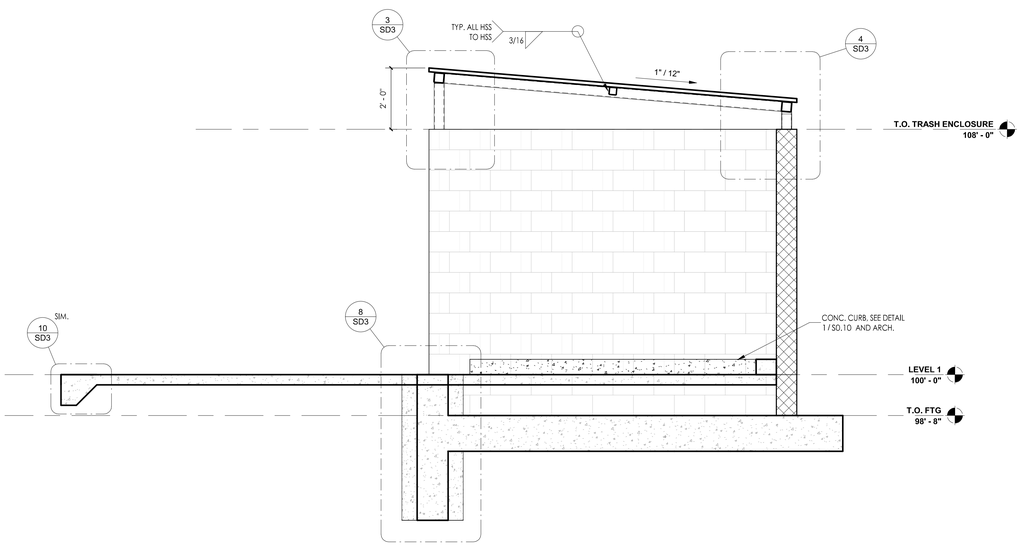

6 TRASH ENCLOSURE SECTION 2
1/2" = 1'-0"

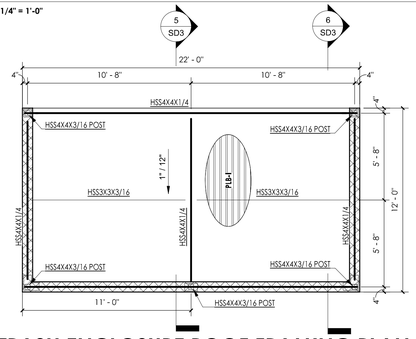

2 TRASH ENCLOSURE ROOF FRAMING PLAN
1/4" = 1'-0"

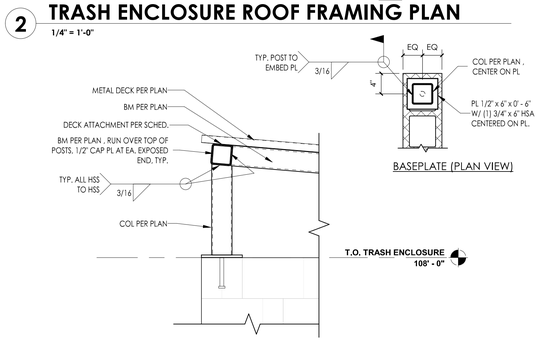

3 HIGH END POST DETAIL
1" = 1'-0"

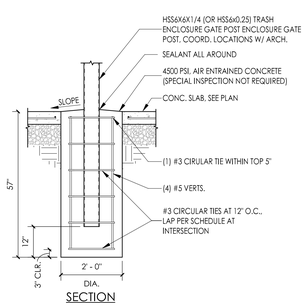

8 TRASH ENCLOSURE GATE POST FOUNDATION
1/2" = 1'-0"

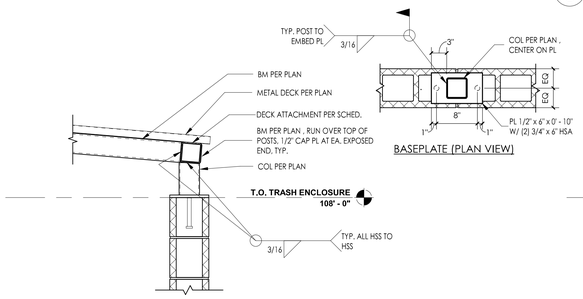

7 LOW MIDDLE POST DETAIL
1" = 1'-0"

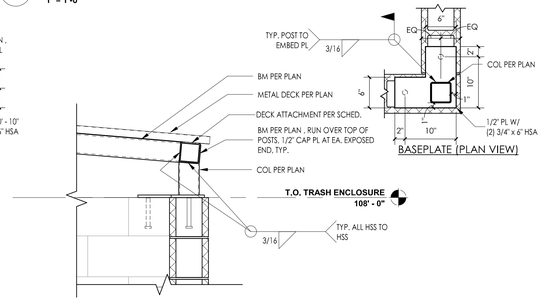

4 LOW CORNER POST DETAIL
1" = 1'-0"

tsk
225 South Arlington Avenue,
Suite A
Reno NV, 89501
phone: 775.857.2949
fax: 775.857.2403
www.tska.com

PROFESSIONAL ENGINEER - STATE OF NEVADA
BOISE ROBERT KYLE WILCOX
Exp: 6-30-24
CIVIL/STRUCTURAL
No. 19779
01/04/2024

THESE DRAWINGS AND SPECIFICATIONS ARE THE PROPERTY OF TATE SNYDER KIMSEY ARCHITECTS AND MAY NOT BE REPRODUCED OR USED FOR ANY PURPOSE WITHOUT THE ARCHITECTS WRITTEN CONSENT. AS INSTRUMENTS OF SERVICE, THESE DOCUMENTS ARE NOT FINAL AND READY FOR USE, AND THEREFORE NOT VALID, UNLESS THEY ARE SEALED, SIGNED AND DATED.

Copyright, Ltd 2023

Consultant

NELSON WILCOX
STRUCTURAL ENGINEERS
225 S. Arlington Ave, Ste B
Reno, Nevada 89501
(775)-848-3166
(702)-290-5760

NWSE Project No: 20220057

PLEASE RECYCLE

Project
SPARKS Fire Station #6

6963 SCHEIDBAR ROAD, SPARKS NEVADA 89436

Job No: 22-043

Owner
CITY OF SPARKS

CITY OF SPARKS FIRE DEPARTMENT Est. 1905

BID SET

REVISIONS

REV	DATE	DESCRIPTION

Sheet Title
SITE DETAILS

Date: 01/04/2024
Sheet No:
SD3

VIEW KEY

NAME — LEVEL NAME
10'-0" — HEIGHT ABOVE PROJECT 0'-0"

1 — INDICATES NOTE USED TO DESCRIBE ADDITIONAL INFORMATION ABOUT WORK REQUIRED, SPECIFIC TO THE SHEET AND/OR DETAIL

INDICATES DIRECTION OF TRUE NORTH
PLAN OR DETAIL NUMBER
PLAN OR DETAIL NAME
PLAN OR DETAIL SCALE

NORTH — 1 — VIEW NAME — 1/8" = 1'-0"

SIM — INDICATES SIMILAR DETAIL REFERENCED IN MULTIPLE LOCATIONS
DETAIL REFERRED TO BY SECTION CUT
M101 — SHEET DETAIL IS LOCATED ON — T101

LINE TYPE AND TAG KEY:

NEW WORK BY THIS CONTRACTOR (WIDE LINE)
- NEW
- EXISTING TO BE REMOVED (SHORT DASHED PATTERN)
- NEW UNDERFLOOR OR UNDERGROUND (LONG DASHED PATTERN)

EXISTING TO REMAIN OR WORK BY OTHERS (NARROW LINE)
- EXISTING
- EXISTING TO BE REMOVED BY OTHERS (SHORT DASHED PATTERN)
- EXISTING UNDERFLOOR OR UNDERGROUND (LONG DASHED PATTERN)

HALFTONING DOES NOT MODIFY SCOPE.

'TAG'-E — TAGS WITH DASH 'E' INDICATES THE REFERENCED OBJECT IS EXISTING

TAG — UNDERLINED TAG INDICATES OBJECT IS IN-SCOPE. IF NEW, ADDITIONAL INFORMATION IS AVAILABLE IN A SCHEDULE, MATERIAL LIST, OR SYMBOL LIST

INDICATES AN EXISTING SYSTEM'S POINT OF CONNECTION/REMOVAL

FIRE / SMOKE BARRIER DESIGNATIONS

THE CONTRACTOR SHALL VERIFY RATINGS WITH THE LATEST SET OF ARCHITECTURAL PLANS AND FURNISH ALL MATERIALS REQUIRED TO COMPLY WITH THOSE RATINGS WHETHER SHOWN OR NOT.

APPLICABLE CODES

CONTRACTOR SHALL COMPLY WITH APPLICABLE CODES AND LOCAL AMENDMENTS.

BUILDING CODE:	IBC 2018 EDITION
FIRE CODE:	IFC 2018 EDITION
PLUMBING CODE:	UPC 2018 EDITION
MECHANICAL CODE:	UMC 2018 EDITION
ELECTRICAL CODE:	NFPA 70 (NEC) 2017 EDITION
LIFE SAFETY CODE:	NFPA 101 2017 EDITION
ENERGY CONSERVATION CODE:	IECC 2018
HEALTH DEPARTMENT CODE:	CURRENT EDITION
LOCAL BUILDING CODE:	CURRENT EDITION

MECHANICAL SYMBOL LIST

NOT ALL SYMBOLS MAY APPLY.

SYMBOL:	DESCRIPTION:
CA	COMPRESSED AIR
DRP	DRAIN
G	NATURAL GAS
GV	GAS REGULATOR VENT
HG	REFRIGERANT HOT GAS
LIQ	REFRIGERANT LIQUID
PC	PUMPED CONDENSATE
REF	REFRIGERANT
SUC	REFRIGERANT SUCTION
SV	SAFETY RELIEF VENT
	PIPE CAP
	PIPE DOWN
	PIPE UP OR UP/DOWN
	PITCH PIPE IN DIRECTION
	DIRECTION OF FLOW IN PIPE
	DIELECTRIC CONNECTION
	UNION/FLANGE
	SHUTOFF VALVE NORMALLY OPEN
	SHUTOFF VALVE NORMALLY CLOSED
	THROTTLING VALVE
	BALANCING VALVE (NUMBER INDICATES GPM)
	AUTOMATIC BALANCING VALVE
	MIXING VALVE
	CONTROL VALVE (THREE-WAY)
	CONTROL VALVE (TWO-WAY)
	SOLENOID VALVE
	CHECK VALVE
	BACKFLOW PREVENTER
	SAFETY/RELIEF VALVE
	PRESSURE REDUCING VALVE (LIQUID/GAS)
	PRESSURE REDUCING VALVE (STEAM)
	TRIPLE DUTY VALVE (ANGLE TYPE)
	TRIPLE DUTY VALVE (IN-LINE TYPE)
	PUMP
	VACUUM BREAKER
	"WYE" - STRAINER
	"WYE" - STRAINER W/SHUTOFF VALVE AND HOSE CONNECTION WITH CAP
	BASKET STRAINER
	FLEXIBLE CONNECTION
	PRESSURE/TEMPERATURE TEST PLUG
	REDUCER - REFERENCE SPECIFICATION FOR CONCENTRIC/ECCENTRIC AND FOT/FOB
	SUCTION DIFFUSER WITH SUPPORT FOOT
	AUTOMATIC AIR VENT
	MANUAL AIR VENT
	DRAIN VALVE WITH HOSE CONNECTION AND CAP
P	PRESSURE SENSOR (FURNISHED WITH BALL VALVE)
P	PRESSURE GAUGE (FURNISHED WITH BALL VALVE)
	DIFFERENTIAL PRESSURE SENSOR
SP	STATIC SWITCH
FM	FLOW METER
F	FLOW SWITCH
FS	FLOW SENSOR
T	STEAM TRAP (REFER TO SCHEDULE)
T	F&T STEAM TRAP (REFER TO SCHEDULE)
T	INVERTED BUCKET STEAM TRAP (REFER TO SCHEDULE)
	ALIGNMENT GUIDE
	PIPE ANCHOR
EJ-# (#.#")	EXPANSION JOINT #.#" IS THE EXPANSION TRAVEL INCHES
M	METER

MECHANICAL SYMBOL LIST

NOT ALL SYMBOLS MAY APPLY.

SYMBOL:	DESCRIPTION:
	DIRECTION OF AIR FLOW
	FLEXIBLE DUCT
	MANUAL VOLUME DAMPER
R	RISE IN DIRECTION OF AIR FLOW
D	DROP IN DIRECTION OF AIR FLOW
	DUCT CAP
	DUCT DOWN
	DUCT UP
	SUPPLY/OUTSIDE AIR DUCT SECTION
	RETURN AIR DUCT SECTION
	EXHAUST/RELIEF AIR DUCT SECTION
	4-WAY DIFFUSER WITH BLANKOFF IN ONE DIRECTION
SD-1 6/115	AIR TERMINAL PROPERTIES SYMBOL NECK SIZE/CFM
###	TERMINAL AIR BOX (REFER TO SCHEDULE)
###	TERMINAL AIR BOX w/REHEAT COIL (REFER TO SCHEDULE)
	FAN POWERED TERMINAL AIR BOX w/REHEAT COIL (REFER TO SCHEDULE)
H	HUMIDIFIER
	OPPOSED BLADE DAMPER (REFER TO SCHEDULE)
	PARALLEL BLADE DAMPER (REFER TO SCHEDULE)
	DIFFERENTIAL PRESSURE SENSOR
H	HUMIDISTAT SENSOR
H	HUMIDISTAT / SENSOR
CO	CARBON MONOXIDE SENSOR
CO_2	CARBON DIOXIDE SENSOR
O	OCCUPANCY SENSOR
P	PRESSURE SENSOR/MONITOR
P	PRESSURE SENSOR (DUCT MOUNTED)
T	THERMOSTAT/SENSOR
T	TEMPERATURE SENSOR
T	THERMOSTAT/SENSOR WITH HEAVY DUTY ENCLOSURE
T	TEMPERATURE SENSOR WITH WELL
T	THERMOMETER WITH WELL (DIAL TYPE)
	THERMOMETER WITH WELL (FILLED TYPE)
XX-Y	AIRFLOW MEASUREMENT SYMBOL XX - AHU SYMBOL Y - SEQUENTIAL NUMBER

MECHANICAL ABBREVIATION KEY

ABBR:	DESCRIPTION:
AD	ACCESS DOOR
AFF	ABOVE FINISHED FLOOR
C	COMMON
CO	CLEANOUT
CFSD	CONTROL/FIRE/SMOKE DAMPER
DPG (0-2")	DIFFERENTIAL PRESSURE GAUGE (RANGE)
DPS	DIFFERENTIAL PRESSURE SWITCH
EA	EXHAUST/RELIEF AIR
ECFSD	EXISTING CONTROL FIRE SMOKE DAMPER
EFD	EXISTING FIRE DAMPER
EFSD	EXISTING FIRE SMOKE DAMPER
EP	ELECTRICAL TO PNEUMATIC VALVE
ESD	EXISTING SMOKE DAMPER
FD	FIRE DAMPER
FOB	FLAT ON BOTTOM
FOT	FLAT ON TOP
FSD	FIRE/SMOKE DAMPER
MA	MIXED AIR
MV	MIXING VALVE
N.C.	NORMALLY CLOSED
NIC	NOT IN CONTRACT
N.O.	NORMALLY OPEN
OA	OUTSIDE AIR
PS	PRESSURE SWITCH
RA	RETURN AIR
SA	SUPPLY AIR
SCCR	SHORT CIRCUIT CURRENT RATING
SD	SMOKE DAMPER
TAB	TERMINAL AIR BOX
TD	TRANSFER DUCT
TYP	TYPICAL
UC-1	DOOR UNDERCUT BY OTHERS (1" TYPICAL)
UON	UNLESS OTHERWISE NOTES

TAB POST-CONSTRUCTION NOTES:

1. AFTER CONSTRUCTION ACTIVITIES ARE COMPLETE, TESTING, ADJUSTING (TAB) AND BALANCING CONTRACTOR SHALL REBALANCE AIR HANDLING UNITS AND EXHAUST FANS AS REQUIRED TO ACHIEVE THE NEW AIRFLOW VALUES SHOWN ON THE CONSTRUCTION DRAWINGS.
2. AREAS SERVED BY THIS EQUIPMENT WHICH WERE NOT RENOVATED SHALL BE RE-BALANCED TO THE AIRFLOW RATES MEASURED BEFORE THE RENOVATION OCCURRED (REFER TO THE FINAL PRE- DEMOLITION REPORT).
3. IF DUCT TRAVERSE LOCATION AS MARKED ON THE DRAWINGS IS INACCESSIBLE FOR MEASUREMENT, THE TAB CONTRACTOR SHALL PERFORM THE TRAVERSE AT AN ALTERNATE LOCATION OR SHALL TAKE MULTIPLE DUCT TRAVERSES AND/OR GRILLE READINGS AS REQUIRED TO DETERMINE THE FLOW RATE. IN THE EVENT TRAVERSES ARE TAKEN AT AN ALTERNATE LOCATION(S), TAB CONTRACTOR SHALL INCLUDE A DRAWING THAT SHOWS THE LOCATIONS WHERE THE ACTUAL MEASUREMENTS WERE TAKEN.
4. A DUCT STATIC PRESSURE READING SHALL BE TAKEN AT EACH LOCATION WHERE A DUCT TRAVERSE READING IS TAKEN AND SHALL BE INCLUDED IN THE FINAL POST-CONSTRUCTION TAB REPORT.
5. TAB CONTRACTOR SHALL COMPILE AND SUBMIT COPIES OF THE FINAL POST-CONSTRUCTION TAB REPORT AS REQUIRED BY SECTION 23 05 93.
6. THE FINAL POST CONSTRUCTION REPORT SHALL INCLUDE ALL ITEMS REQUIRED IN THE SPECIFICATIONS.

1

PROJECT ALTITUDE:	5,000.00 FT. ABOVE SEA LEVEL

MECHANICAL DESIGN CONDITIONS:

DESIGN CONDITIONS: — **BASED ON WEATHER DATA FOR: SPARKS, NV**

SUMMER:	94.4°F DRY BULB, 60.4°F WET BULB
WINTER:	15.9°F DRY BULB
WINTER: (AIR SYSTEM'S OUTSIDE AIR STREAM)	17°F DRY BULB

TYPICAL ROOM SETPOINTS:

SUMMER DESIGN:	75°F DRY BULB
WINTER DESIGN:	72°F DRY BULB

MECHANICAL SHEET INDEX

M0.00	MECHANICAL COVERSHEET
M0.10	MECHANICAL DIAGRAMS
M0.11	MECHANICAL DIAGRAMS
M0.12	MECHANICAL DIAGRAMS
M0.13	MECHANICAL CALCULATIONS
M0.20	MECHANICAL SCHEDULES
M0.21	MECHANICAL SCHEDULES
M0.22	MECHANICAL SCHEDULES
M2.00	OVERALL FLOOR PLAN - MECHANICAL
M2.01	OVERALL FLOOR PLAN - MECHANICAL PRESSURIZATION
M3.00	OVERALL ROOF PLAN - MECHANICAL
M4.01	MECHANICAL ENLARGED PLANS
M4.02	MECHANICAL ENLARGED PLANS
M4.03	MECHANICAL ENLARGED PLANS
M4.04	MECHANICAL ENLARGED PLAN
M5.01	MECHANICAL SCHEMATICS
M5.02	APPARATUS BAY VEHICLE EXHAUST SCHEMATIC
M6.01	CONTROL DIAGRAMS
M6.02	CONTROL DIAGRAMS
M6.03	CONTROL DIAGRAMS
M8.01	MECHANICAL IECC
M8.02	MECHANICAL IECC
M8.03	MECHANICAL IECC
M9.01	HOOD SHOP DRAWINGS
M9.02	HOOD SHOP DRAWINGS
M9.03	HOOD SHOP DRAWINGS
M9.04	HOOD SHOP DRAWINGS
GRAND TOTAL: 27	

PIPING GENERAL NOTES:

1. INSTALL ALL REFRIGERANT LIQUID AND SUCTION PIPING SIZED PER EQUIPMENT MANUFACTURER RECOMMENDATIONS.

MECHANICAL GENERAL NOTES:

THESE NOTES APPLY TO ALL MECHANICAL SHEETS AND TRADES, INCLUDING BUT NOT LIMITED TO, FIRE PROTECTION, PLUMBING, MEDICAL GAS, VENTILATION, PIPING AND TEMPERATURE CONTROL.

1. DRAWINGS SHOWING LOCATIONS OF EQUIPMENT, DUCTWORK, PIPING, ETC. ARE DIAGRAMMATIC AND MAY NOT ALWAYS REFLECT EXACT INSTALLATION CONDITIONS. DRAWINGS SHOW THE GENERAL ARRANGEMENT OF DUCTWORK, PIPING, EQUIPMENT, ETC., AND MAY NOT INCLUDE ALL OFFSETS AND FITTINGS REQUIRED FOR COMPLETE INSTALLATION. THE DRAWINGS SHALL BE FOLLOWED AS CLOSELY AS ACTUAL BUILDING CONSTRUCTION AND THE WORK OF OTHERS WILL PERMIT.
2. DO NOT SCALE DRAWINGS. VERIFY ALL DIMENSIONS AND CLEARANCES FROM ARCHITECTURAL, STRUCTURAL, SUBMITTALS, AND OTHER APPROPRIATE DRAWINGS OR PHYSICALLY AT SITE. REVIEW ALL DRAWINGS, INCLUDING THOSE OF OTHER TRADES.
3. COORDINATE ALL WORK WITH ALL OTHER TRADES PRIOR TO INSTALLATION TO PROVIDE CLEARANCES REQUIRED FOR OPERATION, MAINTENANCE, CODE COMPLIANCE, AND TO VERIFY NON-INTERFERENCE WITH OTHER WORK. DO NOT FABRICATE PRIOR TO VERIFICATION OF NECESSARY CLEARANCES FOR ALL TRADES. BRING ANY INTERFERENCES OR CONFLICTS TO THE ATTENTION OF THE ARCHITECT/ENGINEER BEFORE PROCEEDING WITH FABRICATION OR EQUIPMENT ORDERS.
4. REVIEW SPACE REQUIREMENTS OF EQUIPMENT SPECIFIED OR SUBSTITUTED AND MAKE REASONABLE ACCOMMODATIONS IN LAYOUT AND POSITIONING TO PROVIDE PROPER ACCESS.
5. ANY CHANGES REQUIRED TO ELIMINATE CONFLICTS OR THAT RESULT FROM A FAILURE TO COORDINATE SHALL BE MADE BY THE CONTRACTOR WITHOUT ADDITIONAL COST OR EXPENSE TO OTHERS.
6. EACH CONTRACTOR IS RESPONSIBLE FOR ALL COSTS ASSOCIATED WITH ELECTRICAL CHANGES REQUIRED FOR EQUIPMENT PROPOSED THAT DIFFERS FROM THE BASIS OF DESIGN.
7. REFER TO ARCHITECTURAL REFLECTED CEILING PLAN, ELECTRICAL, TECHNOLOGY AUDIO/VISUAL, AND OTHER MECHANICAL PLANS FOR EXACT LOCATIONS OF ALL CEILING MOUNTED DEVICES, OTHER THAN SPRINKLERS.
8. EACH CONTRACTOR IS RESPONSIBLE FOR DAMAGE CAUSED BY THEIR ACTIONS TO WALLS, FLOORS, CEILINGS, AND ROOFS. THE CONTRACTOR WHOSE WORK CAUSES DAMAGE IS RESPONSIBLE FOR PATCHING TO MATCH ORIGINAL CONSTRUCTION, FIRE RATING, AND FINISH. IN AREAS WITH DRYWALL CEILINGS COORDINATE LOCATIONS OF ACCESS PANELS WITH THE GC FOR ACCESS TO VALVES, DUCTWORK ACCESSORIES, DAMPERS, ETC. COORDINATE PANEL TYPE AND COLOR WITH ARCHITECT. NOTIFY THE GC OF THE REQUIRED ACCESS PANELS PRIOR TO BIDDING.
9. SEAL ALL FLOOR, WALL, AND ROOF PENETRATIONS AIRTIGHT WHERE CONDUITS, PIPING, AND DUCTS PENETRATE. PENETRATIONS THROUGH EXTERIOR WALLS AND ROOF SHALL BE SEALED AIRTIGHT WITH WATERPROOFING MATERIALS RECOMMENDED BY MANUFACTURER FOR OUTDOOR USE.
10. CAULK ALL PIPE AND DUCT PENETRATIONS OF FULL HEIGHT NON-FIRE RATED WALL, PARTITION, FLOOR, AND ROOF ASSEMBLIES. THIS IS ESSENTIAL TO PREVENT NOISE TRANSMISSION FROM ONE ROOM TO ANOTHER AND TO PROVIDE THE DESIRED NC LEVELS WITHIN ROOMS.
11. WHERE PIPES AND DUCTS ARE SHOWN TO PENETRATE FLOORS, PROVIDE SLEEVED OPENINGS WITH THE TOP EDGE RAISED ABOVE FLOOR SURFACE IN ACCORDANCE WITH ALL RELEVANT SPEC SECTIONS. SEAL SLEEVE PERIMETER TO BE WATERTIGHT.
12. EQUIPMENT SIZES AND SERVICE CLEARANCE REQUIREMENTS VARY AMONG DIFFERENT MANUFACTURERS. CONSULT APPROVED SHOP DRAWINGS FOR EQUIPMENT SIZES AND REQUIRED SERVICE CLEARANCES. COORDINATE WITH LAYOUT OF EQUIPMENT PADS, PIPING, DUCTWORK, ETC.
13. DO NOT BLOCK TUBE PULL OR EQUIPMENT SERVICE CLEARANCES.
14. MAINTAIN A MINIMUM WORKING CLEARANCE OF 3'-6" IN FRONT OF ALL ELECTRICAL EQUIPMENT REQUIRING MAINTENANCE, INSPECTION, AND TESTING INCLUDING BUT NOT LIMITED TO PANELS, DISTRIBUTION PANELS, SWITCHBOARDS, MOTOR CONTROL CENTERS, TRANSFORMERS, EQUIPMENT DISCONNECTS AND STARTERS.
15. MAINTAIN THE DEDICATED ELECTRICAL EQUIPMENT SPACE DEFINED BY THE WIDTH / DEPTH OF ELECTRICAL EQUIPMENT MEASURED FROM THE FLOOR TO A HEIGHT 6'-0" ABOVE THE EQUIPMENT OR THE STRUCTURAL CEILING, WHICHEVER IS LOWER. SYSTEMS FOREIGN TO THE ELECTRICAL DISTRIBUTION SYSTEM ARE NOT ALLOWED IN THE DEDICATED ELECTRICAL SPACE INCLUDING, DUCTWORK, PIPING, ETC.
16. PROVIDE CONCRETE EQUIPMENT PAD FOR ALL FLOOR MOUNTED EQUIPMENT. PAD SHALL EXTEND MINIMUM 6" BEYOND ALL SIDES OF EQUIPMENT.
17. DO NOT SUPPORT EQUIPMENT, PIPING, OR DUCTWORK FROM METAL DECKING OR OTHER NON-STRUCTURAL BUILDING ELEMENTS. ANCHORS EMBEDDED IN CONCRETE SHALL BE CRACKED CONCRETE APPROVED IN ACCORDANCE WITH SPECIFICATIONS.

tsk
314 South Water Street,
Suite 100
Henderson, NV 89015
phone: 702.456.3000
fax: 702.898.6209
www.tska.com

THESE DRAWINGS AND SPECIFICATIONS ARE THE PROPERTY OF TATE SNYDER KIMSEY ARCHITECTS AND MAY NOT BE REPRODUCED OR USED FOR ANY PURPOSE WITHOUT THE ARCHITECTS WRITTEN CONSENT. AS INSTRUMENTS OF SERVICE, THESE DOCUMENTS ARE NOT FINAL AND READY FOR USE, AND THEREFORE NOT VALID, UNLESS THEY ARE SEALED, SIGNED AND DATED.

Consultant

IMEG
4590 LONGLEY LANE
RENO, NV 89502
P: 775.828.4889
PROJECT #22007707.00
www.imeg-corp.com

IMEG CORP. RESERVES PROPRIETARY RIGHTS, INCLUDING COPYRIGHTS, TO THIS DRAWING AND THE DATA SHOWN THEREON. SAID DRAWING AND/OR DATA ARE THE EXCLUSIVE PROPERTY OF IMEG CORP. AND SHALL NOT BE USED OR REPRODUCED FOR ANY OTHER PROJECT WITHOUT THE EXPRESS WRITTEN APPROVAL AND PARTICIPATION OF IMEG CORP. ©2022 IMEG CORP.

0 1 2 3
REF. SCALE IN INCHES — PROJECT #22007707.00

PLEASE RECYCLE

Project

SPARKS FIRE STATION #6

6963 WINGFIELD HILLS ROAD, SPARKS, NV 89436

Job No: 22-043

Owner

CITY OF SPARKS

PROFESSIONAL ENGINEER - STATE OF NEVADA
KATHY CALLENDER
Exp:12/31/2024
MECHANICAL
No. 026794
01/03/2024

BID SET

REVISIONS		
REV	DATE	DESCRIPTION
1	05/31/23	Plan Check Responses

Sheet Title

MECHANICAL COVERSHEET

Date: 01/04/2024

Sheet No:

M0.00

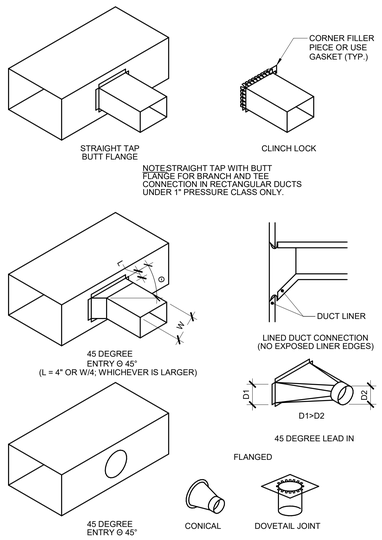

NOTES:

1. DO NOT USE CONNECTIONS WITH SCOOPS.
2. FIT ALL CONNECTIONS TO AVOID VISIBLE OPENINGS AND SECURE THEM SUITABLY FOR THE PRESSURE CLASS.
3. ADDITIONAL MECHANICAL FASTENERS ARE REQUIRED FOR 4"W.G. AND OVER.
4. SEE SPECIFICATIONS FOR ADDITIONAL INFORMATION.

1 BRANCH CONNECTIONS

12" = 1'-0"

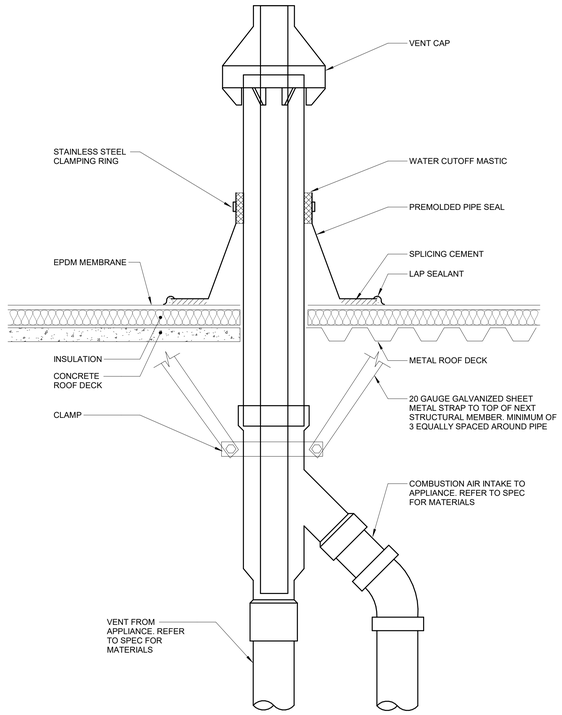

2 CONCENTRIC GAS VENT/INTAKE DETAIL

12" = 1'-0"

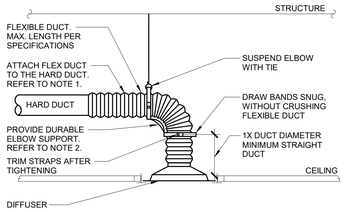

NOTES:

1. TO ATTACH FLEX DUCT TO THE HARD DUCT, TAPE THE INNER LINER TO THE HARD DUCT THEN ATTACH WITH TWO NYLON TIE WRAPS. ONE FOR THE INNER LINER AND ONE FOR THE OUTER SHELL. FOLD THE OUTER SHELL INSIDE ITSELF SO IT HAS NEAT EDGES PRIOR TO TIE WRAPPING.
2. DURABLE ELBOW SUPPORT ACCEPTABLE MANUFACTURER AND MODEL: HART AND COOLEY - SMARTFLOW, THERMAFLEX - FLEXFLOW, TITUS - FLEXRIGHT, OR APPROVED EQUAL.

3 DIFFUSER CONNECTION DETAIL

NO SCALE

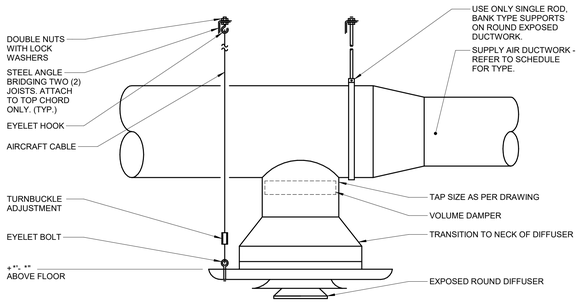

4 DIFFUSER INSTALLATION

NO SCALE

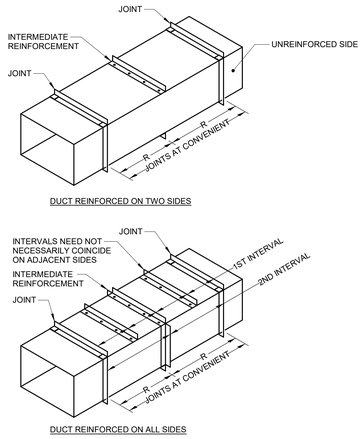

NOTES:

1. 'R' IS AN ALLOWABLE REINFORCEMENT INTERVAL.
2. TOP AND BOTTOM JOINTS MUST QUALIFY AS REINFORCEMENT
3. DUCT SIZES THAT ARE 19 INCHES (483 mm) AND OVER ARE 20 GAGE (1.00 mm) OR LESS, WITH MORE THAN 10 SQUARE FEET (0.93 SQUARE METER) OF UNBRACED PANEL AREA, SHALL BE CROSSBROKEN OR BEADED UNLESS THEY ARE LINED OR EXTERNALLY INSULATED. DUCTS THAT ARE OF HEAVIER GAGE, SMALLER DIMENSIONS, AND SMALLER PANEL AREA AND THOSE THAT ARE LINED OR EXTERNALLY INSULATED ARE NOT REQUIRED TO HAVE CROSSBREAKING OR BEADING.
4. SEE SPECIFICATIONS FOR ADDITIONAL INFORMATION.

5 DUCT REINFORCEMENT DETAIL

12" = 1'-0"

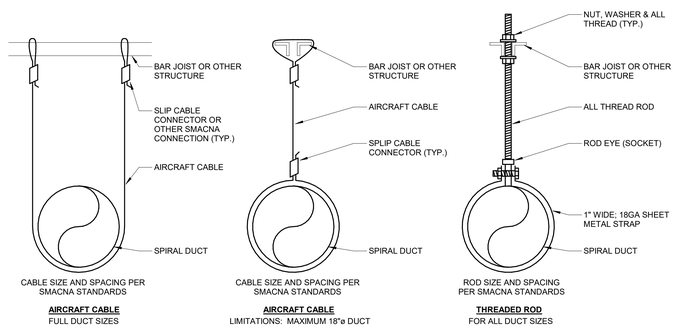

6 EXPOSED ROUND DUCT HANGERS

NO SCALE

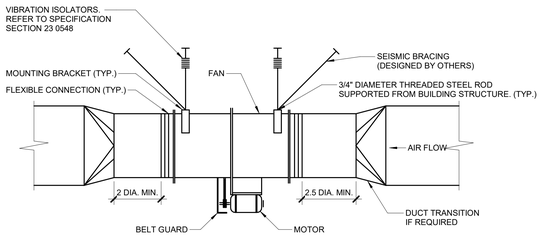

7 FAN - IN-LINE EXHAUST

NO SCALE

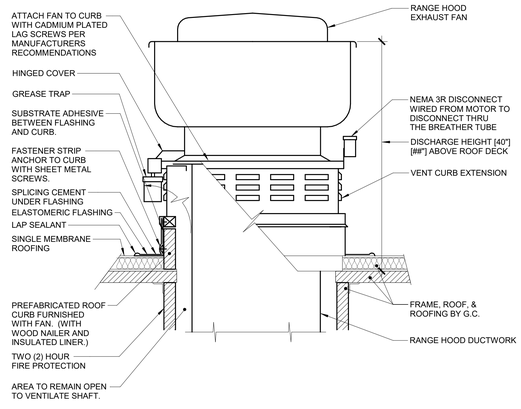

NOTES:

1. ALL ROOF FLASHING SHALL BE PER ROOFING MANUFACTURERS RECOMMENDATIONS.

8 FAN - KITCHEN GREASE EXHAUST FAN

NO SCALE

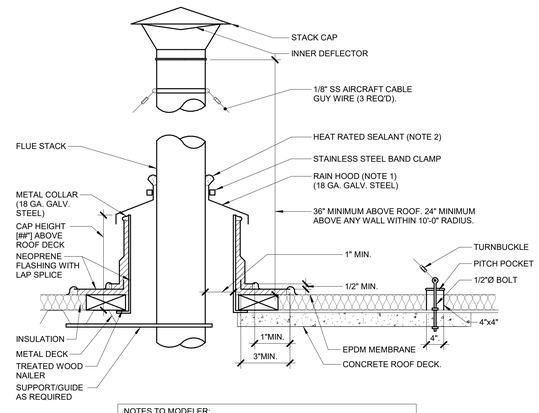

NOTES TO MODELER:
1. IF GUIDE WIRE IS NOT NEEDED DELETE GROUP FLUE STACK GUIDE

NOTES:

1. MAINTAIN A MINIMUM 1" CLEARANCE ABOVE FLASHING COLLAR TO ALLOW FOR VENTILATION OF HEAT.
2. SEALANT GOOD TO 250°F, ALL TEMPERATURES HIGHER SHALL BE SOLDER OR BRAZED

9 FLUE STACK THROUGH ROOF (MEMBRANE ROOF)

NO SCALE

tsk

314 South Water Street,
Suite 100
Henderson, NV 89015
phone: 702.456.3000
fax: 702.898.6209
www.tska.com

THESE DRAWINGS AND SPECIFICATIONS ARE THE PROPERTY OF TATE SNYDER KIMSEY ARCHITECTS AND MAY NOT BE REPRODUCED OR USED FOR ANY PURPOSE WITHOUT THE ARCHITECTS WRITTEN CONSENT. AS INSTRUMENTS OF SERVICE, THESE DOCUMENTS ARE NOT FINAL AND READY FOR USE, AND THEREFORE NOT VALID, UNLESS THEY ARE SEALED, SIGNED AND DATED.

Consultant

IMEG
www.imegcorp.com
4599 LONGLEY LANE
RENO, NV 89502
P: 775.826.4899
PROJECT #22007707.00

IMEG CORP. RESERVES PROPRIETARY RIGHTS, INCLUDING COPYRIGHTS, TO THIS DRAWING AND THE DATA SHOWN THEREON. SAID DRAWING AND/OR DATA ARE THE EXCLUSIVE PROPERTY OF IMEG CORP. AND SHALL NOT BE USED OR REPRODUCED FOR ANY OTHER PROJECT WITHOUT THE EXPRESS WRITTEN APPROVAL AND PARTICIPATION OF IMEG CORP. ©2022 IMEG CORP.

0 1 2 3
REF. SCALE IN INCHES PROJECT #22007707.00

PLEASE RECYCLE

Project

SPARKS FIRE STATION #6

6963 WINGFIELD HILLS ROAD, SPARKS, NV 89436

Job No: 22-043

Owner

CITY OF SPARKS

PROFESSIONAL ENGINEER - STATE OF NEVADA
KATHRYN J. DALLENDER
EXP:12/31/2024
MECHANICAL
No. 026794
01/03/2024

BID SET

REVISIONS		
REV	DATE	DESCRIPTION

Sheet Title

MECHANICAL DIAGRAMS

Date: 01/04/2024

Sheet No:

M0.10

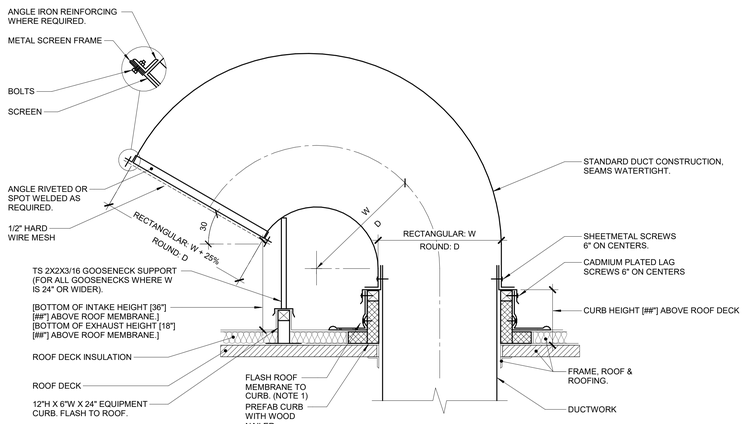

NOTES:

1. ALL ROOF FLASHING SHALL BE PER ROOF MANUFACTURER'S RECOMMENDATIONS.

1 GOOSENECK DETAIL (MEMBRANE ROOF)

NO SCALE

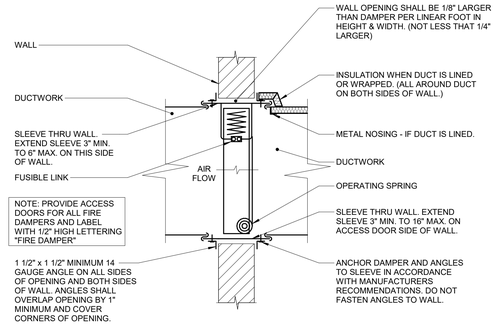

2 FIRE DAMPER - DYNAMIC WALL CURTAIN TYPE A

NO SCALE

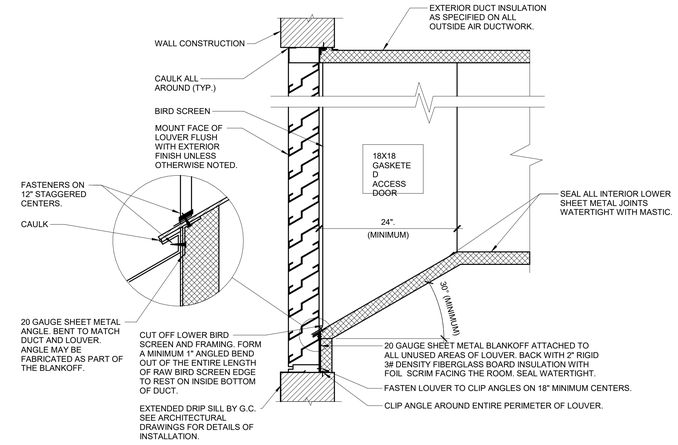

NOTES:

1. SEAL ALL JOING ON BOTTOM INTERIOR SURFACE OF DUCT WITHIN 6'-0" OF THE LOUVER WATER TIGHT.
2. MOUNT BOTTOM OF INTAKE LOUVERS AT LEAST 40" ABOVE GRADE OR ROOF ELEVATION TO MINIMIZE CHANCES OF SNOW DRIFTING INTO THE LOUVER.
3. CAULK SHEETMETAL SCREWS WHERE THE PENETRATE METAL.

3 LOUVER INSTALLATION DETAIL

NO SCALE

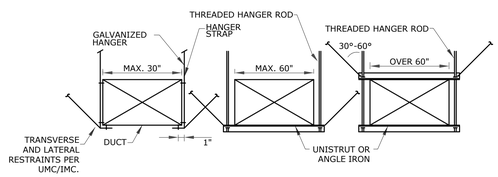

NOTES:

1. ON DUCTS OVER 48" WIDE, BOTTOM SHALL BE BRACE BY ANGLE. FOR CROSS SECTION AREA MORE THAN 8 SQUARE FEET, DUCT SHALL BE BRACED BY ANGLES ON ALL FOUR SIDES.
2. SUPPORTS SHALL BE SPACED AND SIZED AS PER SMACNA STANDARDS.
3. PROVIDE SWAY & SEISMIC BRACING FOR TWICE THE CURRENT IBC EARTHQUAKE ZONE FOR REQUIREMENTS.

4 DUCT HANGER SUPPORT

NO SCALE

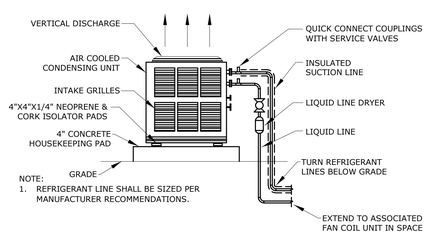

NOTE:

1. REFRIGERANT LINE SHALL BE SIZED PER MANUFACTURER RECOMMENDATIONS.

5 GRADE MOUNTED CONDENSING UNIT

NO SCALE

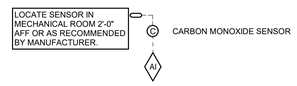

SEQUENCE OF OPERATION:
SEND AN ALARM TO THE OPERATOR INTERFACE IF THE CARBON MONOXIDE LEVELS EXCEED 50 PPM.

6 CARBON MONOXIDE MONITORING

NO SCALE

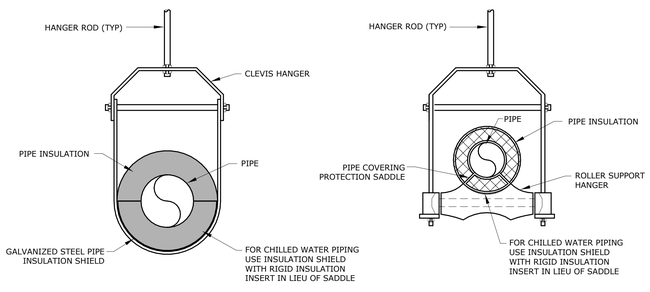

NOTES:

1. USE CLEVIS HANGER FOR 1/2" UP TO 4".
2. USE ROLL SUPPORT HANGER FOR 6" TO 8".
3. PIPE 10" AND LARGER SHALL HAVE ROLLER SUPPORT HANGER WITH DUAL RODS.

7 PIPE HANGER FOR INSULATED PIPING

NO SCALE

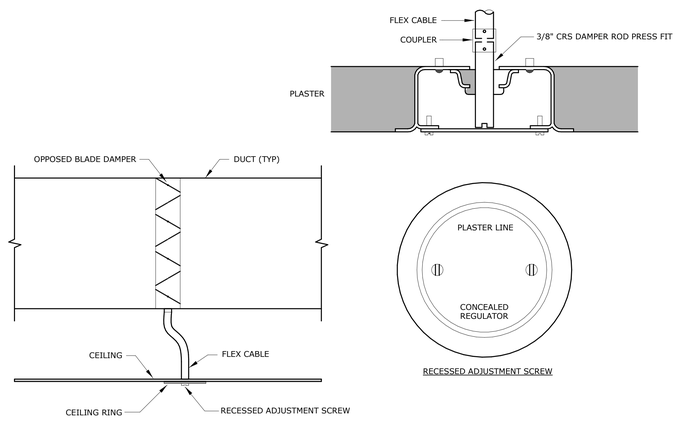

NOTE:

1. INSTALL PER MANUFACTURER RECOMMENDATIONS

8 REMOTE VOLUME DAMPER (RVD)

NO SCALE

tsk

314 South Water Street,
Suite 100
Henderson, NV 89015
phone: 702.456.3000
fax: 702.898.6209
www.tska.com

THESE DRAWINGS AND SPECIFICATIONS ARE THE PROPERTY OF TATE SNYDER KIMSEY ARCHITECTS AND MAY NOT BE REPRODUCED OR USED FOR ANY PURPOSE WITHOUT THE ARCHITECTS WRITTEN CONSENT. AS INSTRUMENTS OF SERVICE, THESE DOCUMENTS ARE NOT FINAL AND READY FOR USE, AND THEREFORE NOT VALID, UNLESS THEY ARE SEALED, SIGNED AND DATED.

Consultant

IMEG
www.imegcorp.com
4599 LONGLEY LANE
RENO, NV 89502
P: 775.828.4999
PROJECT #22007707.00

IMEG CORP. RESERVES PROPRIETARY RIGHTS, INCLUDING COPYRIGHTS, TO THIS DRAWING AND THE DATA SHOWN THEREON. SAID DRAWING AND/OR DATA ARE THE EXCLUSIVE PROPERTY OF IMEG CORP. AND SHALL NOT BE USED OR REPRODUCED FOR ANY OTHER PROJECT WITHOUT THE EXPRESS WRITTEN APPROVAL AND PARTICIPATION OF IMEG CORP. ©2022 IMEG CORP.

0 1 2 3
REF. SCALE IN INCHES PROJECT #22007707.00

PLEASE RECYCLE

Project

SPARKS FIRE STATION #6

6963 WINGFIELD HILLS ROAD,
SPARKS, NV 89436

Job No: 22-043

Owner

CITY OF SPARKS

PROFESSIONAL ENGINEER - STATE OF NEVADA
KATHRYN J. CALLENDER
EXP:12/31/2024
MECHANICAL
No. 026794
01/03/2024

BID SET

REVISIONS		
REV	DATE	DESCRIPTION

Sheet Title

MECHANICAL DIAGRAMS

Date: 01/04/2024

Sheet No:

M0.11

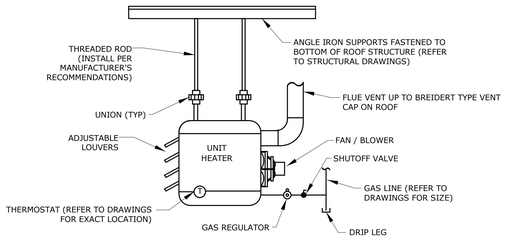

1 GAS FIRED UNIT HEATER

12" = 1'-0"

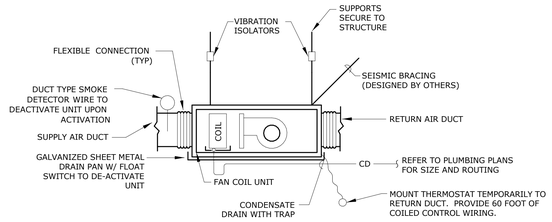

2 HORIZONTAL FAN COIL UNIT

12" = 1'-0"

NOTE: SECONDARY DRAIN PAN IS NOT REQUIRED IF FAN COIL IS LOCATED IN A SPACE WITH NO CEILING AND IF THE CEILING IS T-BAR.

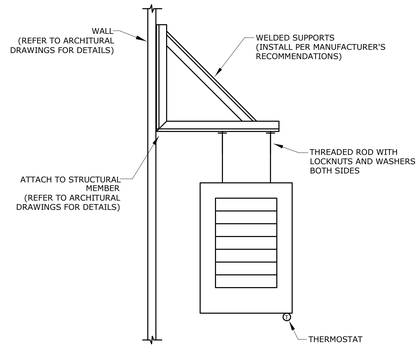

3 ELECTRIC UNIT HEATER

12" = 1'-0"

tsk
314 South Water Street,
Suite 100
Henderson, NV 89015
phone: 702.456.3000
fax: 702.898.6209
www.tska.com

THESE DRAWINGS AND SPECIFICATIONS ARE THE PROPERTY OF TATE SNYDER KIMSEY ARCHITECTS AND MAY NOT BE REPRODUCED OR USED FOR ANY PURPOSE WITHOUT THE ARCHITECTS WRITTEN CONSENT. AS INSTRUMENTS OF SERVICE, THESE DOCUMENTS ARE NOT FINAL AND READY FOR USE, AND THEREFORE NOT VALID, UNLESS THEY ARE SEALED, SIGNED AND DATED.

Consultant

IMEG
www.imegcorp.com
4599 LONGLEY LANE
RENO, NV 89502
P: 775.828.4889
PROJECT #22007707.00

IMEG CORP. RESERVES PROPRIETARY RIGHTS, INCLUDING COPYRIGHTS, TO THIS DRAWING AND THE DATA SHOWN THEREON. SAID DRAWING AND/OR DATA ARE THE EXCLUSIVE PROPERTY OF IMEG CORP. AND SHALL NOT BE USED OR REPRODUCED FOR ANY OTHER PROJECT WITHOUT THE EXPRESS WRITTEN APPROVAL AND PARTICIPATION OF IMEG CORP. ©2022 IMEG CORP.

0 1 2 3
REF. SCALE IN INCHES PROJECT #22007707.00

PLEASE RECYCLE

Project
SPARKS FIRE STATION #6

6963 WINGFIELD HILLS ROAD, SPARKS, NV 89436

Job No: 22-043

Owner
CITY OF SPARKS

PROFESSIONAL ENGINEER - STATE OF NEVADA
KATHY D. CALLENDER
Exp:12/31/2024
MECHANICAL
No. 026794
01/03/2024

BID SET

REVISIONS		
REV	DATE	DESCRIPTION

Sheet Title
MECHANICAL DIAGRAMS

Date: 01/04/2024
Sheet No:

M0.12

Ventilation Sizing Summary for VRF-1

Project Name: 22007707_Sparks Fire Station #6 — 12/07/2022
Prepared by: MSA ENGINEERING CONSULTANTS (RENO, NV) — 07:38AM

2.9 Zone: Zone 9

Zone Name / Space Name	Mult.	Floor Area (ft²)	Maximum Occupants	Maximum Supply Air (CFM)	Required Outdoor Air (CFM/person)	Required Outdoor Air (CFM/ft²)	Required Outdoor Air (CFM)	Required Outdoor Air (% of supply)	Uncorrected Outdoor Air (CFM)
Zone 9 FC-13									
Restroom 128	1	50.0	0.0	15.2	0.00	0.00	0.0	0.0	0.0
Crew 129	1	126.0	1.0	62.7	0.00	0.00	50.0	0.0	50.0
Totals (incl. Space Multipliers)				**77.9**					**50.0**

2.10 Zone: Zone 10

Zone Name / Space Name	Mult.	Floor Area (ft²)	Maximum Occupants	Maximum Supply Air (CFM)	Required Outdoor Air (CFM/person)	Required Outdoor Air (CFM/ft²)	Required Outdoor Air (CFM)	Required Outdoor Air (% of supply)	Uncorrected Outdoor Air (CFM)
Zone 10 FC-12									
Crew 118	1	128.0	1.0	68.2	0.00	0.00	50.0	0.0	50.0
Restroom 119	1	50.0	0.0	15.2	0.00	0.00	0.0	0.0	0.0
Totals (incl. Space Multipliers)				**83.4**					**50.0**

2.11 Zone: Zone 11

Zone Name / Space Name	Mult.	Floor Area (ft²)	Maximum Occupants	Maximum Supply Air (CFM)	Required Outdoor Air (CFM/person)	Required Outdoor Air (CFM/ft²)	Required Outdoor Air (CFM)	Required Outdoor Air (% of supply)	Uncorrected Outdoor Air (CFM)
Zone 11 FC-11									
Restroom 116	1	50.0	0.0	9.1	0.00	0.00	0.0	0.0	0.0
Crew 117	1	129.0	1.0	67.0	0.00	0.00	50.0	0.0	50.0
Totals (incl. Space Multipliers)				**76.1**					**50.0**

2.12 Zone: Zone 12

Zone Name / Space Name	Mult.	Floor Area (ft²)	Maximum Occupants	Maximum Supply Air (CFM)	Required Outdoor Air (CFM/person)	Required Outdoor Air (CFM/ft²)	Required Outdoor Air (CFM)	Required Outdoor Air (% of supply)	Uncorrected Outdoor Air (CFM)
Zone 12 FC-10									
Crew 114	1	129.0	1.0	67.0	0.00	0.00	50.0	0.0	50.0
Restroom 115	1	50.0	0.0	9.1	0.00	0.00	0.0	0.0	0.0
Totals (incl. Space Multipliers)				**76.1**					**50.0**

2.13 Zone: Zone 13

Zone Name / Space Name	Mult.	Floor Area (ft²)	Maximum Occupants	Maximum Supply Air (CFM)	Required Outdoor Air (CFM/person)	Required Outdoor Air (CFM/ft²)	Required Outdoor Air (CFM)	Required Outdoor Air (% of supply)	Uncorrected Outdoor Air (CFM)
Zone 13 FC-9									
Restroom 112	1	50.0	0.0	9.1	0.00	0.00	0.0	0.0	0.0
Crew 113	1	129.0	1.0	67.0	0.00	0.00	50.0	0.0	50.0
Totals (incl. Space Multipliers)				**76.1**					**50.0**

Ventilation Sizing Summary for VRF-1

Project Name: 22007707_Sparks Fire Station #6 — 12/07/2022
Prepared by: MSA ENGINEERING CONSULTANTS (RENO, NV) — 07:38AM

2.14 Zone: Zone 14

Zone Name / Space Name	Mult.	Floor Area (ft²)	Maximum Occupants	Maximum Supply Air (CFM)	Required Outdoor Air (CFM/person)	Required Outdoor Air (CFM/ft²)	Required Outdoor Air (CFM)	Required Outdoor Air (% of supply)	Uncorrected Outdoor Air (CFM)
Zone 14 FC-8									
Crew 110	1	129.0	1.0	67.0	0.00	0.00	50.0	0.0	50.0
Restroom 111	1	50.0	0.0	9.1	0.00	0.00	0.0	0.0	0.0
Totals (incl. Space Multipliers)				**76.1**					**50.0**

2.15 Zone: Zone 15

Zone Name / Space Name	Mult.	Floor Area (ft²)	Maximum Occupants	Maximum Supply Air (CFM)	Required Outdoor Air (CFM/person)	Required Outdoor Air (CFM/ft²)	Required Outdoor Air (CFM)	Required Outdoor Air (% of supply)	Uncorrected Outdoor Air (CFM)
Zone 15 FC-7									
Restroom 108	1	50.0	0.0	9.1	0.00	0.00	0.0	0.0	0.0
Crew 109	1	129.0	1.0	67.0	0.00	0.00	50.0	0.0	50.0
Totals (incl. Space Multipliers)				**76.1**					**50.0**

Ventilation Sizing Summary for VRF-1

Project Name: 22007707_Sparks Fire Station #6 — 12/07/2022
Prepared by: MSA ENGINEERING CONSULTANTS (RENO, NV) — 07:38AM

1. Summary
Ventilation Sizing Method ..... **Sum of Space OA Airflows**

2. Space Ventilation Analysis

2.1 Zone: Zone 1

Zone Name / Space Name	Mult.	Floor Area (ft²)	Maximum Occupants	Maximum Supply Air (CFM)	Required Outdoor Air (CFM/person)	Required Outdoor Air (CFM/ft²)	Required Outdoor Air (CFM)	Required Outdoor Air (% of supply)	Uncorrected Outdoor Air (CFM)
Zone 1 FC-1									
Entry 101	1	58.0	0.0	65.5	0.00	0.06	0.0	0.0	3.5
Corridor 102	1	315.0	0.0	58.0	0.00	0.06	0.0	0.0	18.9
Vest 140	1	75.0	0.0	13.8	0.00	0.06	0.0	0.0	4.5
Office 141	1	274.0	10.0	319.9	0.00	0.06	5.0	0.0	21.4
Totals (incl. Space Multipliers)				**457.2**					**48.3**

2.2 Zone: Zone 2

Zone Name / Space Name	Mult.	Floor Area (ft²)	Maximum Occupants	Maximum Supply Air (CFM)	Required Outdoor Air (CFM/person)	Required Outdoor Air (CFM/ft²)	Required Outdoor Air (CFM)	Required Outdoor Air (% of supply)	Uncorrected Outdoor Air (CFM)
Zone 2 FC-2									
Kitchen	1	465.0	0.0	1401.4	7.50	0.12	0.0	0.0	55.8
Day Room 139	1	481.0	10.0	338.8	5.00	0.06	0.0	0.0	78.9
Totals (incl. Space Multipliers)				**1740.2**					**134.7**

2.3 Zone: Zone 3

Zone Name / Space Name	Mult.	Floor Area (ft²)	Maximum Occupants	Maximum Supply Air (CFM)	Required Outdoor Air (CFM/person)	Required Outdoor Air (CFM/ft²)	Required Outdoor Air (CFM)	Required Outdoor Air (% of supply)	Uncorrected Outdoor Air (CFM)
Zone 3 FC-3									
Training 104	1	298.0	6.0	206.5	5.00	0.06	0.0	0.0	47.9
Totals (incl. Space Multipliers)				**206.5**					**47.9**

2.4 Zone: Zone 4

Zone Name / Space Name	Mult.	Floor Area (ft²)	Maximum Occupants	Maximum Supply Air (CFM)	Required Outdoor Air (CFM/person)	Required Outdoor Air (CFM/ft²)	Required Outdoor Air (CFM)	Required Outdoor Air (% of supply)	Uncorrected Outdoor Air (CFM)
Zone 4 FC-4									
Training 104	1	298.0	6.0	206.5	5.00	0.06	0.0	0.0	47.9
Exercise 103	1	653.0	14.0	1653.0	0.00	0.00	1653.0	0.0	1653.0
Totals (incl. Space Multipliers)				**1859.5**					**1700.9**

Ventilation Sizing Summary for VRF-1

Project Name: 22007707_Sparks Fire Station #6 — 12/07/2022
Prepared by: MSA ENGINEERING CONSULTANTS (RENO, NV) — 07:38AM

2.5 Zone: Zone 5

Zone Name / Space Name	Mult.	Floor Area (ft²)	Maximum Occupants	Maximum Supply Air (CFM)	Required Outdoor Air (CFM/person)	Required Outdoor Air (CFM/ft²)	Required Outdoor Air (CFM)	Required Outdoor Air (% of supply)	Uncorrected Outdoor Air (CFM)
Zone 5 FC-5									
Ice_Vest 137_138	1	226.0	0.0	313.6	0.00	0.06	0.0	0.0	13.6
Janitor_Storage 122	1	78.0	0.0	78.0	0.00	0.00	78.0	0.0	78.0
Laundry 121	1	88.0	0.0	88.0	0.00	0.00	88.0	0.0	88.0
Unisex RR 120	1	96.0	0.0	80.0	0.00	0.00	80.0	0.0	80.0
Totals (incl. Space Multipliers)				**559.6**					**259.6**

2.6 Zone: Zone 6

Zone Name / Space Name	Mult.	Floor Area (ft²)	Maximum Occupants	Maximum Supply Air (CFM)	Required Outdoor Air (CFM/person)	Required Outdoor Air (CFM/ft²)	Required Outdoor Air (CFM)	Required Outdoor Air (% of supply)	Uncorrected Outdoor Air (CFM)
Zone 6 FC-6									
Study 125	1	186.0	5.0	191.7	25.00	0.12	0.0	0.0	147.3
Corridor 123	1	907.0	0.0	101.9	0.00	0.06	0.0	0.0	54.4
Linen 126	1	48.0	0.0	8.8	0.00	0.06	0.0	0.0	2.9
Storage 134	1	100.0	0.0	19.2	0.00	0.06	0.0	0.0	6.0
Storage 135	1	100.0	0.0	18.2	0.00	0.06	0.0	0.0	6.0
Totals (incl. Space Multipliers)				**339.9**					**216.6**

2.7 Zone: Zone 7

Zone Name / Space Name	Mult.	Floor Area (ft²)	Maximum Occupants	Maximum Supply Air (CFM)	Required Outdoor Air (CFM/person)	Required Outdoor Air (CFM/ft²)	Required Outdoor Air (CFM)	Required Outdoor Air (% of supply)	Uncorrected Outdoor Air (CFM)
Zone 7 FC-15									
Restroom 132	1	50.0	0.0	9.1	0.00	0.00	0.0	0.0	0.0
Crew 133	1	126.0	1.0	52.7	0.00	0.00	50.0	0.0	50.0
Totals (incl. Space Multipliers)				**61.8**					**50.0**

2.8 Zone: Zone 8

Zone Name / Space Name	Mult.	Floor Area (ft²)	Maximum Occupants	Maximum Supply Air (CFM)	Required Outdoor Air (CFM/person)	Required Outdoor Air (CFM/ft²)	Required Outdoor Air (CFM)	Required Outdoor Air (% of supply)	Uncorrected Outdoor Air (CFM)
Zone 8 FC-14									
Crew 130	1	129.0	1.0	53.1	0.00	0.00	50.0	0.0	50.0
Restroom 131	1	50.0	0.0	9.1	0.00	0.00	0.0	0.0	0.0
Totals (incl. Space Multipliers)				**62.3**					**50.0**

Ventilation Sizing Summary for FCU/HP-1

Project Name: 22007707_Sparks Fire Station #6 — 12/07/2022
Prepared by: MSA ENGINEERING CONSULTANTS (RENO, NV) — 07:38AM

1. Summary
Ventilation Sizing Method ..... **Sum of Space OA Airflows**
Design Ventilation Airflow Rate ..... **111** CFM

2. Space Ventilation Analysis

Zone Name / Space Name	Mult.	Floor Area (ft²)	Maximum Occupants	Maximum Supply Air (CFM)	Required Outdoor Air (CFM/person)	Required Outdoor Air (CFM/ft²)	Required Outdoor Air (CFM)	Required Outdoor Air (% of supply)	Uncorrected Outdoor Air (CFM)
Zone 1									
Storage 144	1	94.0	0.0	186.8	0.00	0.00	0.0	0.0	0.0
Tool Shop 145	1	314.0	3.0	228.2	0.00	0.00	105.0	0.0	105.0
Compressor room 147	1	45.0	0.0	19.0	5.00	0.06	0.0	0.0	2.7
Restroom 146	1	49.0	0.0	12.5	5.00	0.06	0.0	0.0	2.9
Totals (incl. Space Multipliers)				**446.5**					**110.6**

Ventilation Sizing Summary for FCU/HP-2

Project Name: 22007707_Sparks Fire Station #6 — 12/08/2022
Prepared by: MSA ENGINEERING CONSULTANTS (RENO, NV) — 09:13AM

1. Summary
Ventilation Sizing Method ..... **Sum of Space OA Airflows**
Design Ventilation Airflow Rate ..... **156** CFM

2. Space Ventilation Analysis

Zone Name / Space Name	Mult.	Floor Area (ft²)	Maximum Occupants	Maximum Supply Air (CFM)	Required Outdoor Air (CFM/person)	Required Outdoor Air (CFM/ft²)	Required Outdoor Air (CFM)	Required Outdoor Air (% of supply)	Uncorrected Outdoor Air (CFM)
Zone 1									
EMS Closet 136	1	156.0	1.0	156.0	0.00	0.00	156.0	0.0	156.0
Totals (incl. Space Multipliers)				**156.0**					**156.0**

Ventilation Sizing Summary for FCU/HP-3

Project Name: 22007707_Sparks Fire Station #6 — 12/07/2022
Prepared by: MSA ENGINEERING CONSULTANTS (RENO, NV) — 07:38AM

1. Summary
Ventilation Sizing Method ..... **Sum of Space OA Airflows**
Design Ventilation Airflow Rate ..... **6** CFM

2. Space Ventilation Analysis

Zone Name / Space Name	Mult.	Floor Area (ft²)	Maximum Occupants	Maximum Supply Air (CFM)	Required Outdoor Air (CFM/person)	Required Outdoor Air (CFM/ft²)	Required Outdoor Air (CFM)	Required Outdoor Air (% of supply)	Uncorrected Outdoor Air (CFM)
Zone 1									
Data 124	1	99.0	0.0	398.7	0.00	0.06	0.0	0.0	5.9
Totals (incl. Space Multipliers)				**398.7**					**5.9**

Ventilation Sizing Summary for FCU/HP-4

Project Name: 22007707_Sparks Fire Station #6 — 03/30/2023
Prepared by: MSA ENGINEERING CONSULTANTS (RENO, NV) — 12:43PM

1. Summary
Ventilation Sizing Method ..... **Sum of Space OA Airflows**
Design Ventilation Airflow Rate ..... **1400** CFM

2. Space Ventilation Analysis

Zone Name / Space Name	Mult.	Floor Area (ft²)	Maximum Occupants	Maximum Supply Air (CFM)	Required Outdoor Air (CFM/person)	Required Outdoor Air (CFM/ft²)	Required Outdoor Air (CFM)	Required Outdoor Air (% of supply)	Uncorrected Outdoor Air (CFM)
Zone 1									
Turnout Gear 150	1	279.0	6.0	700.0	0.00	0.00	700.0	0.0	700.0
Red Zone & Laundry 151	1	256.0	1.0	700.0	0.00	0.00	700.0	0.0	700.0
Totals (incl. Space Multipliers)				**1400.0**					**1400.0**

Ventilation Sizing Summary for MAU-1

Project Name: 22007707_Sparks Fire Station #6 — 12/07/2022
Prepared by: MSA ENGINEERING CONSULTANTS (RENO, NV) — 07:38AM

1. Summary
Ventilation Sizing Method ..... **Sum of Space OA Airflows**
Design Ventilation Airflow Rate ..... **6930** CFM

2. Space Ventilation Analysis

Zone Name / Space Name	Mult.	Floor Area (ft²)	Maximum Occupants	Maximum Supply Air (CFM)	Required Outdoor Air (CFM/person)	Required Outdoor Air (CFM/ft²)	Required Outdoor Air (CFM)	Required Outdoor Air (% of supply)	Uncorrected Outdoor Air (CFM)
Zone 1									
Apparatus Bay	1	4620.0	24.0	6930.0	0.00	0.00	6930.0	0.0	6930.0
Totals (incl. Space Multipliers)				**6930.0**					**6930.0**

ALLOWED REFRIGERANT USE FOR SPACE - VRF-1 SYSTEM

CODE: 2018 UMC SEC. 1104.2 AND TABLE 1102.3
STANDARD: ASHRAE 15

REFRIGERANT CHARGE OF VRF SYSTEM

TAG	BASE CHARGE (LBS)	PIPING CHARGE (LBS)	TOTAL CHARGE (LBS)	GWP
VRF-1	25.8	63.74	89.54	2087.5
			89.54	

ABBREVIATION:
SOV = SHUT-OFF VALVE
GWP = GLOBAL WARMING POTENTAL
RG = REFRIGERANT GAS
HPG = HIGH PRESSURE GAS
RL - REFRIGERANT LIQUID

ROOM NO.	ROOM NAME	DWG. REF.	ROOM AREA (SF)	ROOM CLG HT. (FT)	VOL (CF)	CONNECT ROOM VOL (CF)	DUCT VOLUME	TOTAL ROOM VOL (CF)	ALLOWED REFRIGERANT LBS/1000 CF	ALLOWED REFRIGERANT LBS/1 CF	ALLOWED REFRIGERANT TOTAL LBS	INSTALLED REFRIGERANT LBS	INSTALLED REFRIGERANT LBS/1 CF	VRF CONDENSER TAG NO	REMARKS
129	CREW ROOM	M4.03	126	9	1534	9993	60.56	11587.56	26	0.026	301.28	89.54	**0.008**	**VRF-1**	SEE NOTES 1, 2, 3, 4, 5
128	BATHROOM	M4.03	50	8											

NOTE TO BUILDING DEPARTMENT:
1). THIS CALC IS BASED ON DAIKIN VRF SYSTEM (SEE SHEET M5.01 FOR LINE SIZES AND SHEET M0.20 FOR EQUIPMENT SCHEDULE)
2). REFRIGERANT IS R-410A
3). FOR ROOM VOLUME CALCULATION PURPOSES, ROOM VOLUME IS BASED FROM FLOOR TO DROP CEILING OR EXPOSED NON-CEILING
4). SUPPLY DUCT SYSTEM (SF-2) VOLUME. THIS WILL BE INCLUDED IN ROOM VOLUME CALCULATION PER 2018 UMC, SEC. 1104.2.3
5). SINCE THE DUCT SYSTEM FROM SF-2 CONNECTS TO OTHER CREW ROOMS, PER SEC. 1104.2.3, I AM ABLE TO INCLUDE THE VOLUME OF THESE ROOMS

SF-2 SUPPLY DUCT

DUCT SIZE	LENGTH (FT)	VOLUME (CF)
18"x18"	5	11.25
14"x14"	4	5.44
14"x14"	10	13.6
10"	33	18
8"	20	6.98
6"	27	5.29
		60.56

ROOM AREA

ROOM NO.	AREA (ST)	VOLUME (CF)
133	126	1134
132	50	400
130	129	1161
131	50	50
118	128	1152
119	50	50
117	129	1161
116	50	50
114	129	1161
115	50	50
113	129	1161
112	50	50
110	129	1161
111	50	50
109	128	1152
108	50	50
		9993

tsk
314 South Water Street,
Suite 100
Henderson, NV 89015
phone: 702.456.3000
fax: 702.898.6209
www.tska.com

THESE DRAWINGS AND SPECIFICATIONS ARE THE PROPERTY OF TATE SNYDER KIMSEY ARCHITECTS AND MAY NOT BE REPRODUCED OR USED FOR ANY PURPOSE WITHOUT THE ARCHITECTS WRITTEN CONSENT. AS INSTRUMENTS OF SERVICE, THESE DOCUMENTS ARE NOT FINAL AND READY FOR USE, AND THEREFORE NOT VALID, UNLESS THEY ARE SEALED, SIGNED AND DATED.

Consultant

IMEG
www.imegcorp.com
4599 LONGLEY LANE
RENO, NV 89502
P: 775.826.4899
PROJECT #22007707.00

IMEG CORP. RESERVES PROPRIETARY RIGHTS, INCLUDING COPYRIGHTS, TO THIS DRAWING AND THE DATA SHOWN THEREON. SAID DRAWING AND/OR DATA ARE THE EXCLUSIVE PROPERTY OF IMEG CORP. AND SHALL NOT BE USED OR REPRODUCED FOR ANY OTHER PROJECT WITHOUT THE EXPRESS WRITTEN APPROVAL AND PARTICIPATION OF IMEG CORP. ©2022 IMEG CORP.

0 1 2 3
REF. SCALE IN INCHES — PROJECT #22007707.00

PLEASE RECYCLE

Project
SPARKS FIRE STATION #6

6963 WINGFIELD HILLS ROAD, SPARKS, NV 89436

Job No: 22-043

Owner
CITY OF SPARKS

PROFESSIONAL ENGINEER - STATE OF NEVADA
KATHY CALLENDER
Exp:12/31/2024
MECHANICAL
No. 026794
01/03/2024

BID SET

REVISIONS		
REV	DATE	DESCRIPTION

Sheet Title
MECHANICAL CALCULATIONS

Date: 01/04/2024
Sheet No:
M0.13

VRF MODULAR OUTDOOR UNIT SCHEDULE

NOTES:
1.UNIT SHALL BE SELECTED FOR DESIGN HEATING LOAD.
2.COORDINATE ELECTRICAL CONNECTIONS WITH MANUFACTURER UNIT IS SUPPLIED AS MULTIPLE MODULES. EACH MODULE REQUIRES A SEPARATE ELECTRICAL CONNECTION AND DISCONNECT.
3.NOMINAL COOLING CAPACITY RATED AT: INDOOR TEMP = 80°FDB/67°FWB, OUTDOOR TEMP = 95°FDB.
4.DESIGN COOLING CAPACITY SHALL BE RATED AT: INDOOR TEMP = 75°FDB, 48% RH, OUTDOOR TEMP = 95°FDB. EFFECTS OF ESTIMATED REFRIGERANT LINE LENGTH SHALL BE INCLUDED IN COMPUTING DESIGN CAPACITY.
5.DESIGN HEATING CAPACITY SHALL BE RATED AT: INDOOR TEMP = 72°FDB, OUTDOOR TEMP = 15°FDB. EFFECTS OF ESTIMATED REFRIGERANT LINE LENGTHS AND DEFROSTING SHALL BE INCLUDED IN COMPUTING DESIGN CAPACITY.
6.PROVIDE INTELLIGENT TOUCH MANAGER (MODEL DCM601B71).
7.PROVIDE REQUIRED REFNET BRANCH PIPING KIT.
8.PROVIDE HEAT RECOVERY CONDENSING UNIT MULTI CONNECTION PIPING KIT.
9.PROVIDE NAVIGATION REMOTE CONTROLLER (MODEL BRC1E73).
10.PROVIDE SNOW/WIND KIT.
11.EER=11.50 (DUCTED), IEER=21.00 (DUCTED), COP=2.1 (DUCTED), SCHE=22.80
12.

				COOLING			HEATING				ELECTRICAL						WEIGHT	VIBRATION ISOLATION				
													MODULE 1		MODULE 2							
TAG NAME	AREA SERVED	REFRIGERANT	MAX. REFRIGERANT CHARGE	NOMINAL MBH (NOTE 3)	DESIGN MBH (NOTE 4)	OPERATING MAXIMUM °FDB	Nominal Heating Capacity	DESIGN MBH (NOTE 5)	OPERATING MINIMUM °FDB	NUMBER OF CONNECTED INDOOR UNITS	VOLTAGE	PHASES	MCA	MOCP	MCA	MOCP	OPERATING	TYPE	DEFL.	MANUFACTURER	MODEL	NOTES
HP-1	MAIN ELECTRICAL ROOM AND TOOL SHOP	R-410A	8.6	34.4	22.8	105.0	36.6	10	-13	2	208	1	32.50	35	0 A	0 A	214	SUPER W	0.40	Daikin	4MXL36TVJU	1, 2, 3, 4, 5
VRF-1	BUILDING	R-410A	25.8	192	184	105.0	216	206	-13	15	208	3	59.80	60	0 A	0 A	957	SUPER W	0.40	Daikin	REYQ192AATJA	1, 2, 3, 4, 5, 6, 7, 8, 9, 10, 11

VRF INDOOR UNIT SCHEDULE

NOTES:
1.INDOOR UNITS SELECTED FOR 5000 FEET ALTITUDE.
2.PROVIDE PIPING BOX ACCESSORY WITH 2" MERV 8 FILTERS.
3.PROVIDE CONDENSATE PUMP.
4.PROVIDE PROGRAMMABLE, WALL MOUNTED, WIRED, THERMOSTAT. REFER TO SPECIFICATION 23 81 45 FOR DESCRIPTION OF CONTROLS.
5.DUCTED CONCEALED UNITS SHALL BE PROVIDED WITH SUPPLY AND RETURN DUCT FLANGES.
6. FCU-1 IS DAIKIN MODEL FXSQ07TAVJU, FCU-5 IS DAIKIN MODEL FTXS24LVJU

								REFRIGERANT					ELECTRICAL				WEIGHT	VIBRATION ISOLATION				
TAG NAME	AREA SERVED	ASSOCIATED VRF HEAT PUMP	CONFIGURATION	TONS	CFM	OA CFM	EXT. S.P. IN. W.C.	TYPE	DESIGN COOLING TOTAL BTUH	RATED COOLING CAPACITY BTUH	DESIGN HEATING TOTAL BTUH	RATED HEATING CAPACITY BTUH	VOLTAGE	PHASES	MCA	MOCP	OPERATING	TYPE	DEFL.	MANUFACTURER	MODEL	NOTES
FC-1	OFFICE 141, ENTRY, VEST & CORRIDOR 102	VRF-1	CEILING SUSPENDED, DUCTED	1	355	75	0.6	R-410A	10000	7490	6300	11390	208	1	0.80	15 A	55	30N	1"	DAIKIN	FXSQ12TAVJU	1, 2, 3, 4, 5
FC-2	DAYROOM 139 & KITCHEN 107	VRF-1	CEILING SUSPENDED, DUCTED	6	1765	135	0.95	R-410A	33900	42809	11200	66763	208	1	9.00	15 A	302	30N	1"	Daikin	FXMQ72MVJU	1, 2, 3, 4, 5
FC-3	TRAINING 101	VRF-1	CEILING CASSETTE, DUCTLESS	0.5	247	60	0.1	R-410A	4500	3863	4100	5546	208	1	0.30	15 A	35.3	N/A	0"	Daikin	FXZQ05TAVJU	1, 3, 4, 5
FC-4	EXERCISE 103	VRF-1	CEILING SUSPENDED, DUCTED	8	2190	1633	1.1	R-410A	52800	54864	86000	89018	208	1	10.10	15 A	302	30N	1"	Daikin	FXMQ96MVJU	1, 2, 3, 4, 5
FC-5	VEST 138, UNISEX, LAUNDRY & JANITORS	VRF-1	CEILING SUSPENDED, DUCTED	1.25	530	266	0.6	R-410A	12100	8907	15000	14019	208	1	1.40	15 A	60	30N	1"	Daikin	FXSQ15TAVJU	1, 2, 3, 4, 5
FC-6	STUDY 125, CORRIDOR 123, STORAGE & LINENS	VRF-1	CEILING CASSETTE, DUCTLESS	1.25	370	280	0.6	R-410A	9600	8907	13500	14019	208	1	1.40	15 A	60	30N	1"	Daikin	FXSQ15TAVJU	1, 3, 4, 5
FC-7	CREW 133	VRF-1	CEILING CASSETTE, DUCTLESS	0.5	230	50	0.1	R-410A	1800	3863	3700	5546	208	1	0.30	15 A	35.3	N/A	0"	Daikin	FXZQ05TAVJU	1, 3, 4, 5
FC-8	CREW 130	VRF-1	CEILING CASSETTE, DUCTLESS	0.5	230	50	0.1	R-410A	2000	3863	3700	5546	208	1	0.30	15 A	35.3	N/A	0"	Daikin	FXZQ05TAVJU	1, 3, 4, 5
FC-9	CREW 129	VRF-1	CEILING CASSETTE, DUCTLESS	0.5	230	50	0.1	R-410A	2000	3863	3700	5546	208	1	0.30	15 A	35.3	N/A	0"	Daikin	FXZQ05TAVJU	1, 3, 4, 5
FC-10	CREW 118	VRF-1	CEILING CASSETTE, DUCTLESS	0.5	230	50	0.1	R-410A	2000	3863	3700	5546	208	1	0.30	15 A	35.3	N/A	0"	Daikin	FXZQ05TAVJU	1, 3, 4, 5
FC-11	CREW 117	VRF-1	CEILING CASSETTE, DUCTLESS	0.5	230	50	0.1	R-410A	2000	3863	3700	5546	208	1	0.30	15 A	35.3	N/A	0"	Daikin	FXZQ05TAVJU	1, 3, 4, 5
FC-12	CREW 114	VRF-1	CEILING CASSETTE, DUCTLESS	0.5	230	50	0.1	R-410A	2000	3863	3700	5546	208	1	0.30	15 A	35.3	N/A	0"	Daikin	FXZQ05TAVJU	1, 3, 4, 5
FC-13	CREW 113	VRF-1	CEILING CASSETTE, DUCTLESS	0.5	230	50	0.1	R-410A	1800	3863	3700	5546	208	1	0.30	15 A	35.3	N/A	0"	Daikin	FXZQ05TAVJU	1, 3, 4, 5
FC-14	CREW 110	VRF-1	CEILING CASSETTE, DUCTLESS	0.5	230	50	0.1	R-410A	1900	3863	4100	5546	208	1	0.30	15 A	35.3	N/A	0"	Daikin	FXZQ05TAVJU	1, 3, 4, 5
FC-15	CREW 109	VRF-1	CEILING CASSETTE, DUCTLESS	0.5	230	50	0.1	R-410A	2200	3863	4100	5546	208	1	0.30	15 A	35.3	N/A	0"	Daikin	FXZQ05TAVJU	1, 3, 4, 5
FCU-1	TOOL SHOP	HP-1	CEILING SUSPENDED, DUCTED	0.75	281	115	0.5	R-410A	5100	7500	3400	8500	208	1	0.80	15 A	56	30N	1"	Daikin	SEE NOTE 6	1, 2, 3, 4, 5
FCU-2	ELECTRICAL ROOM	HP-1	WALL MOUNTED DUCTLESS	2	643	0	0.1	R-410A	16100	21400	25400	1100	208	1	0.57	15 A	31	N/A	0"	Daikin	SEE NOTE 6	1, 3, 4

VRF SPLITTER BOX SCHEDULE

		ELECTRICAL				WEIGHT			
TAG NAME	SERVES	VOLTAGE	PHASES	MCA	MOCP	OPERATING	MANUFACTURER	MODEL	NOTES
BSB-1	VRF-1	208	1	0.40	15 A	48.5	Daikin	BSF4Q54TVJ	
BSB-2	VRF-1	208	1	0.60	15 A	72.8	Daikin	BSF6Q54TVJ	
BSB-3	VRF-1	208	1	0.80	15 A	81.6	Daikin	BSF8Q54TVJU	

GAS DUCT FURNACE SCHEDULE

NOTES:
1.INDOOR UNIT SELECTED FOR 5000 FEET ALTITUDE.
2.PROVIDE SWAGELOK SHUT OFF VALVE.
3.PROVIDE STAINLESS STEEL BURNER AND HEAT EXCHANGER.
4.PROVIDE ELECTRONIC MODULATION GAS CONTROLS.
5.PROVIDE ROOM OVERRIDE FOR ELECTRONIC MODULATION WITH DUCT STAT.
6.PROVIDE VERTICAL COMBUSTION AIR INLET/VENT TERMINAL ASSEMBLY.

				ELECTRICAL			HEATING		FURNACE PERFORMANCE				WEIGHT	VIBRATION ISOLATION				
TAG NAME	AREA SERVED	EXT. S.P. IN. W.C.	CFM	VOLTAGE	PHASES	FULL LOAD AMPS	MINIMUM EFFICIENCY AFUE	MINIMUM OUTPUT MBH	EAT DB °F	EAT WB °F	LAT °F	TOTAL MBH	OPERATING	TYPE	DEFL.	MANUFACTURER	MODEL	NOTES
GDF-1	TURNOUT GEAR ROOM	0.25	1,400	120 V	1	1.9 A	80	120	15.9	12	111.1	150	203	HD	4 205/256"	REZNOR	SC	1, 2, 3, 4, 5, 6

SPLIT SYSTEM UNIT SCHEDULE

NOTES:
1.INDOOR UNITS SELECTED FOR 5000 FEET ALTITUDE.
2.PROVIDE PIPING BOX ACCESSORY.
3.PROVIDE FILTER BOX ACCESSORY WITH 2" MERV 8 FILTERS

		FAN CFM		INDOOR UNIT				OUTDOOR UNIT			ELECTRICAL						
TAG NAME	AREA SERVED	CFM	OUTSIDE AIR CFM	COOLING MBH	HEATING MBH	WEIGHT	MODEL	SEER	WEIGHT	MODEL	VOLTAGE	PHASE	MCA	MOCP AMPS	MANUFACTURER	NOTES	SCHEDULE IDENTIFIER
CU-3,ECU-3	DATA ROOM	572	0	34.4	0	38	FTX36NVJU	15.9	133	RK36NMVJUA	208	1	17.0	20	Daikin	1, 2	SPLIT SYSTEM
HP-2/FCU-2	EMS CLOSET	392	98	10.0	13.6	64	FDMQ18RVJU	18	70	RXL12QMVJUA	208	1	13.1	15	Daikin	1, 2	SPLIT SYSTEM
HP-4, FCU-4	TURNOUT GEAR ROOM	1400	1,400	36.1	54	102	FBQ48PVJU	14	225	RZQ48TAVJUA	208	1	29.1	35	Daikin	1, 2, 3	SPLIT SYSTEM

UNIT HEATER SCHEDULE - ELECTRIC

NOTES:
1.INDOOR UNITS SELECTED FOR 5000 FEET ALTITUDE.
2.PROVIDE WALL MOUNTED SPST THERMOSTAT.
3.PROVIDE WALL MOUNTED SPST SINGLE STAGE THERMOSTAT.
4.PROVIDE WALL BRACKET FOR HORIZONTAL DISCHARGE.

				ELECTRICAL				HEATING ELEMENT TOTAL KW (QTY * KW)		ELECTRICAL						
TAG NAME	AREA SERVED	CONFIGURATION	CFM	HP	RPM	EAT °F	LAT °F	QTY	KW	VOLTAGE	PHASES	CONTROL	WEIGHT	MANUFACTURER	MODEL	NOTES
EUH-1	FIRE RISER	HORIZONTAL	310	0	0	15.9	51.8	1	3	208	1	THERMOSTAT	40	REZNOR	EGEB	1, 2, 3, 4
EUH-2	STORAGE	HORIZONTAL	310	0	0	15.9	51.8	1	3	208	1	THERMOSTAT	40	REZNOR	EGEB	1, 2, 3, 4
EUH-3	MECHANICAL ROOM	HORIZONTAL	310	0	0	15.9	51.8	1	3	208	1	THERMOSTAT	40	REZNOR	EGEB	1, 2, 3, 4

UNIT HEATER SCHEDULE - GAS FIRED

NOTES:
1.INDOOR UNITS SELECTED FOR 5000 FEET ALTITUDE.
2.PROVIDE PROPANE.
3.PROVIDE WALL MOUNTED THERMOSTAT.
4.PROVIDE INTEGRATED 30 DEG & 60 DEG DOWNTURN NOZZLES.
5.PROVIDE TWO-STAGE GAS VALVES.

			HEATING (MBH)		ELECTRICAL						VIBRATION ISOLATION					
TAG NAME	AREA SERVED	CFM	INPUT	OUTPUT	HP	FLA	VOLTAGE	PHASES	MOCP	WEIGHT	TYPE	DEFL.	MANUFACTURER	MODEL	NOTES
GUH-1	APPARATUS BAY	2562	150	125	0.25	5.9	120	1	15 A	300	30N	1"	REZNOR	UBX-150	1, 2, 3, 4, 5
GUH-2	APPARATUS BAY	2562	150	125	0.25	5.9	120	1	15 A	300	30N	1"	REZNOR	UBX-150	1, 2, 3, 4, 5
GUH-3	APPARATUS BAY	2562	150	125	0.25	5.9	120	1	15 A	300	30N	1"	REZNOR	UBX-150	1, 2, 3, 4, 5
GUH-4	APPARATUS BAY	2562	150	125	0.25	5.9	120	1	15 A	300	30N	1"	REZNOR	UBX-150	1, 2, 3, 4, 5
GUH-5	COMPRESSOR ROOM	625	45	37	0.06	1550	120	1	15 A	67	N/A	0"	REZNOR	UDAS	1, 2, 3, 4
GUH-6	COMPRESSOR ROOM	625	45	37	0.06	1550	120	1	15 A	67	N/A	0"	REZNOR	UDAS	1, 2, 3, 4

tsk
314 South Water Street,
Suite 100
Henderson, NV 89015
phone: 702.456.3000
fax: 702.898.6209
www.tska.com

THESE DRAWINGS AND SPECIFICATIONS ARE THE PROPERTY OF TATE SNYDER KIMSEY ARCHITECTS AND MAY NOT BE REPRODUCED OR USED FOR ANY PURPOSE WITHOUT THE ARCHITECTS WRITTEN CONSENT. AS INSTRUMENTS OF SERVICE, THESE DOCUMENTS ARE NOT FINAL AND READY FOR USE, AND THEREFORE NOT VALID, UNLESS THEY ARE SEALED, SIGNED AND DATED.

Consultant

IMEG
www.imegcorp.com
4599 LONGLEY LANE
RENO, NV 89502
P: 775.828.4599
PROJECT #22007707.00

IMEG CORP. RESERVES PROPRIETARY RIGHTS, INCLUDING COPYRIGHTS, TO THIS DRAWING AND THE DATA SHOWN THEREON. SAID DRAWING AND/OR DATA ARE THE EXCLUSIVE PROPERTY OF IMEG CORP. AND SHALL NOT BE USED OR REPRODUCED FOR ANY OTHER PROJECT WITHOUT THE EXPRESS WRITTEN APPROVAL AND PARTICIPATION OF IMEG CORP. ©2022 IMEG CORP.

0 1 2 3
REF. SCALE IN INCHES PROJECT #22007707.00

PLEASE RECYCLE

Project
SPARKS FIRE STATION #6

6963 WINGFIELD HILLS ROAD, SPARKS, NV 89436

Job No: 22-043

Owner
CITY OF SPARKS

CITY OF SPARKS FIRE DEPARTMENT Est. 1905

PROFESSIONAL ENGINEER - STATE OF NEVADA
KATHY D. CALLENDER
Exp:12/31/2024
MECHANICAL
No. 026794
01/03/2024

BID SET

REVISIONS		
REV	DATE	DESCRIPTION
1	05/31/23	Plan Check Responses

Sheet Title
MECHANICAL SCHEDULES

Date: 01/04/2024
Sheet No:
M0.20

CEILING FAN SCHEDULE

NOTES:
1.INDOOR UNITS SELECTED FOR 5000 FEET ALTITUDE.
2.PROVIDE EC MOTOR WITH WIRING HARNESS.
3.PROVIDE UL LISTED - POWER VENTILATOR.
4.PROVIDE ISOLATORS AND BRACKETS, NEOPRENE HANGING KIT.
5.PROVIDE CONTINUOUS OPERATION.
6.PROVIDE INTERLOCK WITH COMPRESSOR.
7.PROVIDE GRAVITY BACKDRAFT DAMPER.
8.PROVIDE SOLID STATE SPEED CONTROL.
9.PROVIDE ROOF VENT CAP (MODEL RCC-7), CURB MOUNTED.
10.PROVIDE 14" HIGH ROOF CURB.
11.PROVIDE INTERLOCK WITH FCU-2.
12.PROVIDE INTERLOCK WITH FC-5.
13.PROVIDE CONTINUOUS OPERATION.
14.SET FAN SPEED TO LOW (50 CFM).
15.PROVIDE MODEL FV-CSVK1 CONDENSATION SENSOR. FAN SENSOR TO SET FAN SPEED TO HIGH (80 CFM).
16.PROVIDE MODEL FV-VS15VK1 MULTI-SPEED WITH TIME DELAY (SET DELAY TO 10 MIN).
17.SET FAN SPEED TO LOW (80 CFM).
18.PROVIDE MODEL FV-CSVK1 CONDENSATION SENSOR. FAN SENSOR TO SET FAN SPEED TO HIGH (100 CFM).
19.PROVIDE MODEL FV-MSVK1 MOTION SENSOR. SET AIRFLOW TO 50 CFM....

TAG NAME	AREA SERVED	CFM	ESP	ELECTRICAL WATTS	VOLTAGE	PHASES	FLA	SONES	MANUFACTURER	MODEL	NOTES
CEF-1	BATHROOM	50	0.25	13	120	1	0.27	0.3	Panasonic	FV-0511VK2	1, 7, 13, 14, 15
CEF-2	BATHROOM	50	0.25	13	120	1	0.27	0.3	Panasonic	FV-0511VK2	1, 7, 13, 14, 15
CEF-3	BATHROOM	50	0.25	13	120	1	0.27	0.3	Panasonic	FV-0511VK2	1, 7, 13, 14, 15
CEF-4	BATHROOM	80	0.25	13	120	1	0.27	0.3	Panasonic	FV-0511VK2	1, 7, 16, 17, 18, 19
CEF-5	BATHROOM	50	0.25	13	120	1	0.27	0.3	Panasonic	FV-0511VK2	1, 7, 13, 14, 15
CEF-6	BATHROOM	50	0.25	13	120	1	0.27	0.3	Panasonic	FV-0511VK2	1, 7, 13, 14, 15
CEF-7	BATHROOM	50	0.25	13	120	1	0.27	0.3	Panasonic	FV-0511VK2	1, 7, 13, 14, 15
CEF-8	BATHROOM	50	0.25	13	120	1	0.27	0.3	Panasonic	FV-0511VK2	1, 7, 13, 14, 15
CEF-9	BATHROOM	50	0.25	13	120	1	0.27	0.3	Panasonic	FV-0511VK2	1, 7, 13, 14, 15
CEF-10	BATHROOM	50	0.25	13	120	1	0.27	0.3	Panasonic	FV-0511VK2	1, 7, 13, 14, 15
CEF-11	BATHROOM	50	0.25	13	120	1	0.27	0.3	Panasonic	FV-0511VK2	1, 16, 19
EF-3	TOOL SHOP & COMPRESSOR ROOM	905	0.4	187	120	1	4.75	1.5	Greenheck	CSP-A1050-VG	1, 2, 3, 4, 5, 6, 7
EF-6	EMS CLOSET	156	0.3	179	120	1	2.7	2	Greenheck	CSP-B200	1, 3, 4, 5, 7, 8, 9, 10, 11
EF-7	LAUNDRY & JANITORS	166	0.3	179	120	1	2.7	2	Greenheck	CSP-B200	1, 3, 4, 5, 7, 8, 9, 10, 12

LOUVER SCHEDULE

NOTES:
1.FINISH TYPES: TYPE 1 - MILL FINISH, TYPE 2 - 204-R1 SATIN ANODIZED, TYPE 3 - BAKED ENAMEL FINISH ON PRETREATED PRIME PAINT. STANDARD COLOR - SELECTION BY ARCHITECT. TYPE 4 - BAKED EPOXY FINISH ON PRIME COATED METAL. STANDARD COLOR - SELECTION BY ARCHITECT. TYPE 5 - DURANODIC BRONZE - LIGHT, MEDIUM, DARK. TYPE 6 - PVDF (KYNAR 500, HYLAR 5000, OR DURANAR). STANDARD COLOR - SELECTION BY ARCHITECT.
2.PROVIDE GALV. BIRDSCREEN.
3.LOUVER SIZED FOR COMBUSTION AIR PER 2018 UMC SEC. 701.6.1(1)
4. PROVIDE GRAVITY BACKDRAFT DAMPER.

TAG NAME	CFM	SIZE (INCHES) WIDTH	HEIGHT	FREE AREA VELOCITY	S.P. IN. W.C.	FINISH (NOTE 1)	MANUFACTURER	MODEL	NOTES
LVR-1	1400	48	18	505	0.06	TYPE 3	RUSKIN	ELF375	1, 2
LVR-4	1400	48	18	505	0.06	TYPE 3	RUSKIN	ELF375	1, 2
LVR-5	3160	48	36	521	0.06	TYPE 3	RUSKIN	ELF375	1, 2, 4
LVR-6	790	48	12	523	0.06	TYPE 3	RUSKIN	ELF375	1, 2, 4
LVR-7	115	12	12	349	0.03	TYPE 3	RUSKIN	ELF375	1, 2
LVR-8	1693	48	18	611	0.07	TYPE 3	RUSKIN	ELF375	1, 2
LVR-9	6930	60	54	560	0.07	TYPE 3	RUSKIN	ELF375	1, 2
LVR-10	6930	60	54	560	0.06	TYPE 3	RUSKIN	ELF375	1, 2
LVR-11	790	24	18	600	0.07	TYPE 3	RUSKIN	ELF375	1, 2

DEDICATED OUTDOOR AIR UNIT

NOTES:
1.INDOOR UNITS SELECTED FOR 5000 FEET ALTITUDE.
2.DOUBLE WALL CONSTRUCTION WITH 1" FIBERGLASS INSULATION, ENTIRE UNIT.
3.PROVIDE PANELED BOTTOM.
4.ACCESS AND CONNECTION ON RIGHTSIDE (WHEN FACING INTAKE).
5.PROVIDE HINGED ACCESS DOORS.
6.PROVIDE G90 GALVANIZED UNIT FINISH.
7.PROVIDE DIRECT-DRIVE MIXED FLOW SUPPLY FAN. SUPPLY FAN AND MOTOR TO HAVE NEOPRENE VIBRATION ISOLATION.
8.PROVIDE TERMINAL STRIP WITH REMOTE PANEL UNIT CONTROLS, NEMA-1 PANEL ENCLOSURE.
9.PROVIDE VFD FOR SUPPLY FAN (FACTORY INSTALLED) WITH CONSTANT VOLUME SUPPLY FAN CONTROL.
10.PROVIDE COOLING INLET AIR SENSOR.
11.PROVIDE DIRTY FILTER SWITCH.
12.PROVIDE 120V/24V SMOKE DETECTOR (SHIPPED LOOSE).
13.PROVIDE AIRFLOW PROVING MONITORING CONTACT.
14.PROVIDE LOUVERED INTAKE WITH ALUMINUM MESH FILTERS WEATHERHOOD.
15.PROVIDE 2" MERV 13 SUPPLY AIR FILTERS, 20"x20"x2" (QTY=6).
16.PROVIDE EVAPORATIVE CONTROLS (RECIRC PUMP WITH AUTO DRAIN AND FLUSH SEQUENCE).
17.PROVIDE EVAP VALVES (SHIPPED LOOSE).
18.PROVIDE GAS FURNACE SECTION. GAS INPUT=417.8 MBH, GAS OUTPUT=334.2 MBH WITH 8:1 TURNDOWN. EAT=16.0, LAT=68.4
19.UNIT TO OPERATE CONTINUOUSLY.

TAG NAME	AREA SERVED	SUPPLY FAN NO. OF FANS	CFM TOTAL	EXT. S.P.	R.P.M	BHP	MHP	MIN. O.A. CFM	EVAPORATIVE COIL PERFORMANCE EAT °F DB	EAT °F WB	LAT °F DB	LAT °F WB	GPM	MAX. A.P.D. IN. W.C.	EVAPORATIVE COIL TYPE	EFFICIENCY	FILTER TYPE	VELOCITY	PRESSURE DROP CLEAN/DIRTY	ELECTRICAL VOLTAGE	PHASES	MCA	MOCP	WEIGHT OPERATING	VIBRATION ISOLATION TYPE	DEFL.	MANUFACTURER	MODEL	NOTES
MAU-1	APPARATUS BAY	1	6930	1.00	1218	6	7.5	6930	94.4	60.4	63.9	60.4	0.8	0.6	CELDEK	0.80	MERV 13	500	0.25	208	3	34	50	2000	30N	1.000	Greenheck	IGX-115-H22-N	1, 2, 3, 4, 5, 6, 7, 8, 9, 10, 11, 12, 13, 14, 15, 16, 17, 18, 19

FAN SCHEDULE

NOTES:
1.INDOOR UNITS SELECTED FOR 5000 FEET ALTITUDE.
2.PROVIDE EC MOTOR.
3.PROVIDE UL LISTED - POWER VENTILATOR.
4.PROVIDE WIRED AND MOUNTED JUNCTION BOX.
5.PROVIDE ALUMINUM HOUSING WITH 1-INCH THICK INSULATION.
6.PROVIDE MOTOR COVER - ALUMINUM.
7.PROVIDE ISOLATORS AND BRACKETS, NEOPRENE HANGING KIT.
8.PROVIDE GRAVITY BACKDRAFT DAMPER.
9.PROVIDE 0-10VDC CONTROL INPUT.
10.PROVIDE DIAL FOR BALANCING CONTROL.
11.PROVIDE GALVANIZED BIRDSCREEN.
12.PROVIDE 14" HIGH ROOF CURB.
13.PROVIDE INTERLOCK WITH FCU-4.
14.PROVIDE INTERLOCK WITH SCBA COMPRESSOR.
15.PROVIDE INTERLOCK WITH MAU-1.
16.PROVIDE INTERLOCK WITH FC-4.
17.PROVIDE UL/UL-762 LISTED POWER VENTILATOR FOR RESTUARANT EXHAUST APPLIANCE. HIGH TEMP CURB SEAL RATED FOR CONTINUOUS DUTY AT 1500 DEG F.
18.PROVIDE 20" HIGH ROOF CURB.
19.PROVIDE HINGED CURB.
20.PROVIDE GREASE TRAP.
21.PROVIDE HEAT BAFFLE, CLEAN-OUT PORT.
22.PROVIDE INTERLOCK WITH GREASE HOOD CONTROLS.
23.PROVIDE SLOPED FILTER BOX WITH 2" PLEATED MERV 8 FILTERS.
24.PROVIDE CONTINUOUS OPERATION.
25.PROVIDE FAN INLET DUCT ADAPTER.
26.PROVIDE EXHAUST DISCHARGE POSITION AT RD 270.
27. FAN TO INCLUDE VIBRATION ISOLATION.
28. INTERLOCK EXHAUST FAN TO CONTROL PANEL PROVIDED WITH FAN.

TAG NAME	AREA SERVED	CFM	ESP. (IN. W.C)	FAN RPM	DRIVE TYPE	MAX. AMCA SONES	BACKDRAFT DAMPER TYPE	ELECTRICAL BHP	MHP	VOLTAGE	PHASES	MCA	MOCP	SCCR	WEIGHT	VIBRATION ISOLATION TYPE	DEFL.	MANUFACTURER	MODEL	NOTES
EF-1	TURNOUT GEAR ROOM	1400	0.50	1500	DIRECT	9.5	GRAVITY	0.24	0.75	120	1	11 A	20 A	5,000 A	100	HD	0.40"	Greenheck	SQ-140-VG	1, 2, 3, 4, 5, 6, 7, 8, 9, 13
EF-2	SCBA AIR ROOM	3160	0.30	1377	DIRECT	17.8	GRAVITY	0.89	2	208	3	8 A	15 A	5,000 A	117	N/A	0.00"	Greenheck	G-160-VG	1, 2, 8, 9, 10, 11, 12, 14
EF-4	APPARATUS BAY	6930	0.30	1608	DIRECT	23	GRAVITY	1.52	3	208	3	12 A	20 A	5,000 A	202	30N	1.00"	Greenheck	SQ-18-VG	1, 2, 3, 4, 5, 6, 7, 8, 9, 15
EF-5	EXERCISE ROOM	1693	0.30	1725	DIRECT	13.5	GRAVITY	0.38	0.5	120	1	8 A	15 A	5,000 A	65	30N	1.00"	Greenheck	SQ-120-VG	1, 2, 3, 4, 5, 6, 7, 8, 9, 16
KEF-1	KITCHEN HOOD	1500	0.85	1274	DIRECT	10.6	N/A	0.319	0.75	120	1	8.9 A	15 A	0 A	94	N/A	0.00"	Captiveaire	DU85HFA	1, 2, 3, 17, 18, 19, 20, 21, 22
SF-2	CREW QUARTERS	986	0.75	1730	DIRECT	12.5	GRAVITY	0.33	0.75	120	1	13 A	20 A	5,000 A	127	HD	0.40"	Greenheck	SQ-130HP-VG	1, 2, 3, 4, 5, 6, 7, 8, 9, 23, 24
VEF-1	APPARATUS BAY	3600	11.00	3540	DIRECT	0	GRAVITY	7.8	10	208	3	23.8 A	35 A	0 A	331	N/A	1.00"	Nederman	NCF 80/20	1, 2, 9, 25, 26, 27, 28

MOTOR OPERATED DAMPER SCHEDULE

NOTES:
1.SEE NOTES

TAG NAME	AREA SERVED	SIZE DIAMETER	CFM MAX.	CFM MIN.	BLADE CONFIGURATION	ACTUATOR TYPE	ACTUATOR STYLE	POWER FAILURE POSITION	POSITIVE POSITION FEEDBACK REQUIRED	Manufacturer	Model	NOTES
CD-1	FC-7	6	50	0	OPPOSED	ELECTRIC	EXTERNAL MOUNT	NO	Yes	GREENHECK	VCDR-53	2-POSITION, 0-10VDC CONTROL SIGNAL, 24 VAC POWER SUPPLY WITH TRANSFORMER
CD-2	FC-8	6	50	0	OPPOSED	ELECTRIC	EXTERNAL MOUNT	NO	Yes	GREENHECK	VCDR-53	2-POSITION, 0-10VDC CONTROL SIGNAL, 24 VAC POWER SUPPLY WITH TRANSFORMER
CD-3	FC-9	6	50	0	OPPOSED	ELECTRIC	EXTERNAL MOUNT	NO	Yes	GREENHECK	VCDR-53	2-POSITION, 0-10VDC CONTROL SIGNAL, 24 VAC POWER SUPPLY WITH TRANSFORMER
CD-4	FC-10	6	50	0	OPPOSED	ELECTRIC	EXTERNAL MOUNT	NO	Yes	GREENHECK	VCDR-53	2-POSITION, 0-10VDC CONTROL SIGNAL, 24 VAC POWER SUPPLY WITH TRANSFORMER
CD-5	FC-11	6	50	0	OPPOSED	ELECTRIC	EXTERNAL MOUNT	NO	Yes	GREENHECK	VCDR-53	2-POSITION, 0-10VDC CONTROL SIGNAL, 24 VAC POWER SUPPLY WITH TRANSFORMER
CD-6	FC-12	6	50	0	OPPOSED	ELECTRIC	EXTERNAL MOUNT	NO	Yes	GREENHECK	VCDR-53	2-POSITION, 0-10VDC CONTROL SIGNAL, 24 VAC POWER SUPPLY WITH TRANSFORMER
CD-7	FC-13	6	50	0	OPPOSED	ELECTRIC	EXTERNAL MOUNT	NO	Yes	GREENHECK	VCDR-53	2-POSITION, 0-10VDC CONTROL SIGNAL, 24 VAC POWER SUPPLY WITH TRANSFORMER
CD-8	FC-14	6	50	0	OPPOSED	ELECTRIC	EXTERNAL MOUNT	NO	Yes	GREENHECK	VCDR-53	2-POSITION, 0-10VDC CONTROL SIGNAL, 24 VAC POWER SUPPLY WITH TRANSFORMER
CD-9	FC-15	6	50	0	OPPOSED	ELECTRIC	EXTERNAL MOUNT	NO	Yes	GREENHECK	VCDR-53	2-POSITION, 0-10VDC CONTROL SIGNAL, 24 VAC POWER SUPPLY WITH TRANSFORMER

HOOD & LOUVERED PENTHOUSE SCHEDULE

NOTES:
1.PROVIDE 14" HIGH ROOF CURB.
2.PROVIDE ALUMINUM BIRDSCREEN AND INSECT SCREEN.
3.PROVIDE 0.5-INCH INSULATION.
4.PROVIDE ALUMINUM CONSTRUCTION.
5.SEE CAPTIVEAIRE GREASE HOOD AND EXHAUST FAN SUBMITTAL ON SHEET M9.01 THROUGH M9.04.

TAG NAME	AREA SERVED	CFM	THROAT SIZE WIDTH	LENGTH	THROAT VELOCITY	STATIC PRESSURE DROP	MAX. HEIGHT (TOP OF CURB TO TOP OF EQUIP.)	CURB TYPE	MAX. DIMENSIONS LENGTH	WIDTH	HEIGHT	WEIGHT	MANUFACTURER	MODEL	NOTES
GEH-1	KITCHEN RANGE	1500	60	72	1910	-0.79	0	N/A	72"	60"	24"	724	CaptiveAire	6024 ND-2	5
H-1	OSA INTAKE	2344	24	24	586	0.06	12	GPI	38	38	12.25	40	Greenheck	WIH	1, 2, 3, 4
H-2	OSA INTAKE	986	18	18	438	0.04	12	GPI	32	32	12.25	30	Greenheck	WIH	1, 2, 3, 4
H-3	VEHICLE EXHAUST	3600	22	22	1071	0.16	14	GPI	28	28	14	331	Greenheck	FGR	1, 2, 3, 4

tsk
314 South Water Street,
Suite 100
Henderson, NV 89015
phone: 702.456.3000
fax: 702.898.6209
www.tska.com

THESE DRAWINGS AND SPECIFICATIONS ARE THE PROPERTY OF TATE SNYDER KIMSEY ARCHITECTS AND MAY NOT BE REPRODUCED OR USED FOR ANY PURPOSE WITHOUT THE ARCHITECTS WRITTEN CONSENT. AS INSTRUMENTS OF SERVICE, THESE DOCUMENTS ARE NOT FINAL AND READY FOR USE, AND THEREFORE NOT VALID, UNLESS THEY ARE SEALED, SIGNED AND DATED.

Consultant

IMEG 4599 LONGLEY LANE RENO, NV 89502 P: 775.828.4899 PROJECT #22007707.00
www.imegcorp.com

IMEG CORP. RESERVES PROPRIETARY RIGHTS, INCLUDING COPYRIGHTS, TO THIS DRAWING AND THE DATA SHOWN THEREON. SAID DRAWING AND/OR DATA ARE THE EXCLUSIVE PROPERTY OF IMEG CORP. AND SHALL NOT BE USED OR REPRODUCED FOR ANY OTHER PROJECT WITHOUT THE EXPRESS WRITTEN APPROVAL AND PARTICIPATION OF IMEG CORP. ©2022 IMEG CORP.

0 1 2 3
REF. SCALE IN INCHES PROJECT #22007707.00

PLEASE RECYCLE

Project
SPARKS FIRE STATION #6

6963 WINGFIELD HILLS ROAD, SPARKS, NV 89436

Job No: 22-043

Owner
CITY OF SPARKS

PROFESSIONAL ENGINEER - STATE OF NEVADA
KATHRYN J. CALLENDER
Exp:12/31/2024
MECHANICAL
No. 026794
01/03/2024

BID SET

REVISIONS		
REV	DATE	DESCRIPTION
1	05/31/23	Plan Check Responses

Sheet Title
MECHANICAL SCHEDULES

Date: 01/04/2024
Sheet No:
M0.21

VEHICLE EXHAUST SYSTEM SCHEDULE

NEDERMAN MAGNA-RAIL SYSTEM

SEE EXHAUST FAN SCHEDULE VEF-1 FOR FAN SPECIFICATIONS, INCLUDE FAN ADAPTERS FOR INLET.
SEE SHEET M5.02 FOR SCHEMATIC OF RAIL SYSTEM. SEE PLANS FOR RAIL LOCATIONS.

1. PROVIDE (3) MAGNA-RAIL GREEN EXHAUST EXTRACTION SYSTEM, 74-FEET LONG, INCLUDING ALL MOUNTING HARDWARE AND (2) 8" DIAMETER TOP RAIL DUCT ADAPTER TAPS. INCLUDE BALANCING DAMPER FOR RAIL.
2. PROVIDE (3) TROLLEY ASSEMBLIES, WHICH INCLUDES ELECTRO-MAGNET UNIT, MAGNETIC ATTACHMENT PLATE, FLEXIBLE HOSE, SUPPORT BRACKETS AND MODEL HB NOZZLE 600 LL.

NEDERMAN MAGNA-TRACT SYSTEM

SEE EXHAUST FAN SCHEDULE VEF-1 FOR FAN SPECIFICATIONS, INCLUDE FAN ADAPTERS FOR INLET.
SEE SHEET M5.02 FOR SCHEMATIC OF TRACT SYSTEM. SEE PLANS FOR TRACT LOCATIONS.

1. PROVIDE (2) MAGNA-TRACT HS EXHAUST EXTRACTION SYSTEM, 30-FEET LONG, AND (1) 41-FEET LONG. INCLUDING ALL MOUNTING HARDWARE AND BALANCER FOR TRACT SYSTEM.
2. PROVIDE (3) TROLLEY ASSEMBLIES, WHICH INCLUDES ELECTRO-MAGNET UNIT, MAGNETIC ATTACHMENT PLATE, FLEXIBLE HOSE, SUPPORT BRACKETS AND MODEL HB NOZZLE 600 LL.

NEDERMAN CONTROL PANEL SYSTEM

1. PROVIDE (1) AUTOSTART CONTROL PANEL WITH (6) WIRELESS RECEIVERS AND TRANSMITTERS, FAN MOTOR STARTER, RECEIVER ANTENNA, TRANSFORMER (230V TO 24V) AND BE U.L LISTED.

AIR DISTRIBUTION SCHEDULE

MARK	MANUFACTURER MODEL	AIRFLOW (CFM)	SERVICE TYPE	MOUNTING	NECK SIZE	MODULE SIZE	REMARKS
SG-1	TITUS 272RL	SEE PLAN	SUPPLY	SURFACE	12"x12"	13.75"x13.75"	1, 2, 3
SG-2	TITUS S-DL	SEE PLAN	SUPPLY	DUCT	20"x12"	21.75"x13.75"	1, 2, 3
SG-3	TITUS S-DL	SEE PLAN	SUPPLY	DUCT	24"x8"	25.75"x9.75"	1, 2, 3
SD-1	TITUS TDC(A)	SEE PLAN	SUPPLY	SURFACE	10"	24"x24"	1, 3
SD-2	TITUS XC-310	SEE PLAN	SUPPLY	DUCT	20"	36"	1, 3
SD-3	TITUS TDC(A)	SEE PLAN	SUPPLY	T-BAR	10"	24"x24"	1, 3
SD-4	TITUS TDC(A)	SEE PLAN	SUPPLY	T-BAR	8"	24"x24"	1, 3
SD-5	TITUS TDC(A)	SEE PLAN	SUPPLY	T-BAR	6"	24"x24"	1, 3
SD-6	TITUS 50F	SEE PLAN	SUPPLY	SURFACE	16"	24"x24"	1, 3
SD-7	TITUS TDC(A)	SEE PLAN	SUPPLY	SURFACE	14"	24"x24"	1, 3
SD-8	TITUS TDC(A)	SEE PLAN	SUPPLY	SURFACE	8"	24"x24"	1, 3
SD-9	TITUS TDC(A)	SEE PLAN	SUPPLY	SURFACE	6"	12"x12"	1, 3
RD-1	TITUS 50F	SEE PLAN	RETURN	SURFACE	10"	24"x24"	1, 3
RD-2	TITUS 50F	SEE PLAN	RETURN	T-BAR	10"	24"x24"	1, 3
RD-3	TITUS 50F	SEE PLAN	RETURN	SURFACE	8"	24"x24"	1, 3
RD-4	TITUS 50F	SEE PLAN	RETURN	T-BAR	16"	24"x24"	1, 3
EG-1	TITUS 300RL	SEE PLAN	EXHAUST	SURFACE	24"x12"	25.75"x13.75"	1, 3
EG-2	TITUS 50F	SEE PLAN	EXHAUST	SURFACE	16"	17.75"x17.75"	1, 3
ED-1	TITUS 50F	SEE PLAN	EXHAUST	SURFACE	14"	24"x24"	1, 3
ED-2	TITUS 50F	SEE PLAN	EXHAUST	T-BAR	8"	24"x24"	1, 3
ED-3	TITUS 50F	SEE PLAN	EXHAUST	SURFACE	6"	12"x12"	1, 3
ED-4	TITUS 50F	SEE PLAN	EXHAUST	SURFACE	10"	24"x24"	1, 3
LD-1	TITUS FTBI-10	SEE PLAN	SUPPLY	SURFACE	6" OVAL	24" LONG	1, 3

1. COORDINATE BORDER, COLOR, FINISH AND EXACT LOCATION WITH ARCHITECT.
2. PROVIDE OBD.
3. PROVIDE DUCT TRANSITION AS REQUIRED.

tsk

314 South Water Street,
Suite 100
Henderson, NV 89015
phone: 702.456.3000
fax: 702.898.6209
www.tska.com

THESE DRAWINGS AND SPECIFICATIONS ARE THE PROPERTY OF TATE SNYDER KIMSEY ARCHITECTS AND MAY NOT BE REPRODUCED OR USED FOR ANY PURPOSE WITHOUT THE ARCHITECTS WRITTEN CONSENT. AS INSTRUMENTS OF SERVICE, THESE DOCUMENTS ARE NOT FINAL AND READY FOR USE, AND THEREFORE NOT VALID, UNLESS THEY ARE SEALED, SIGNED AND DATED.

Consultant

IMEG
www.imegcorp.com
4599 LONGLEY LANE
RENO, NV 89502
P: 775.828.4599
PROJECT #22007707.00

IMEG CORP. RESERVES PROPRIETARY RIGHTS, INCLUDING COPYRIGHTS, TO THIS DRAWING AND THE DATA SHOWN THEREON. SAID DRAWING AND/OR DATA ARE THE EXCLUSIVE PROPERTY OF IMEG CORP. AND SHALL NOT BE USED OR REPRODUCED FOR ANY OTHER PROJECT WITHOUT THE EXPRESS WRITTEN APPROVAL AND PARTICIPATION OF IMEG CORP. ©2022 IMEG CORP.

0 1 2 3
REF. SCALE IN INCHES PROJECT #22007707.00

PLEASE RECYCLE

Project

SPARKS FIRE STATION #6

6963 WINGFIELD HILLS ROAD,
SPARKS, NV 89436

Job No: 22-043

Owner

CITY OF SPARKS

PROFESSIONAL ENGINEER - STATE OF NEVADA
KATHRYN J. DALLENDER
Exp:12/31/2024
MECHANICAL
No. 026794

01/03/2024

BID SET

REVISIONS		
REV	DATE	DESCRIPTION

Sheet Title

MECHANICAL SCHEDULES

Date: 01/04/2024

Sheet No:

M0.22

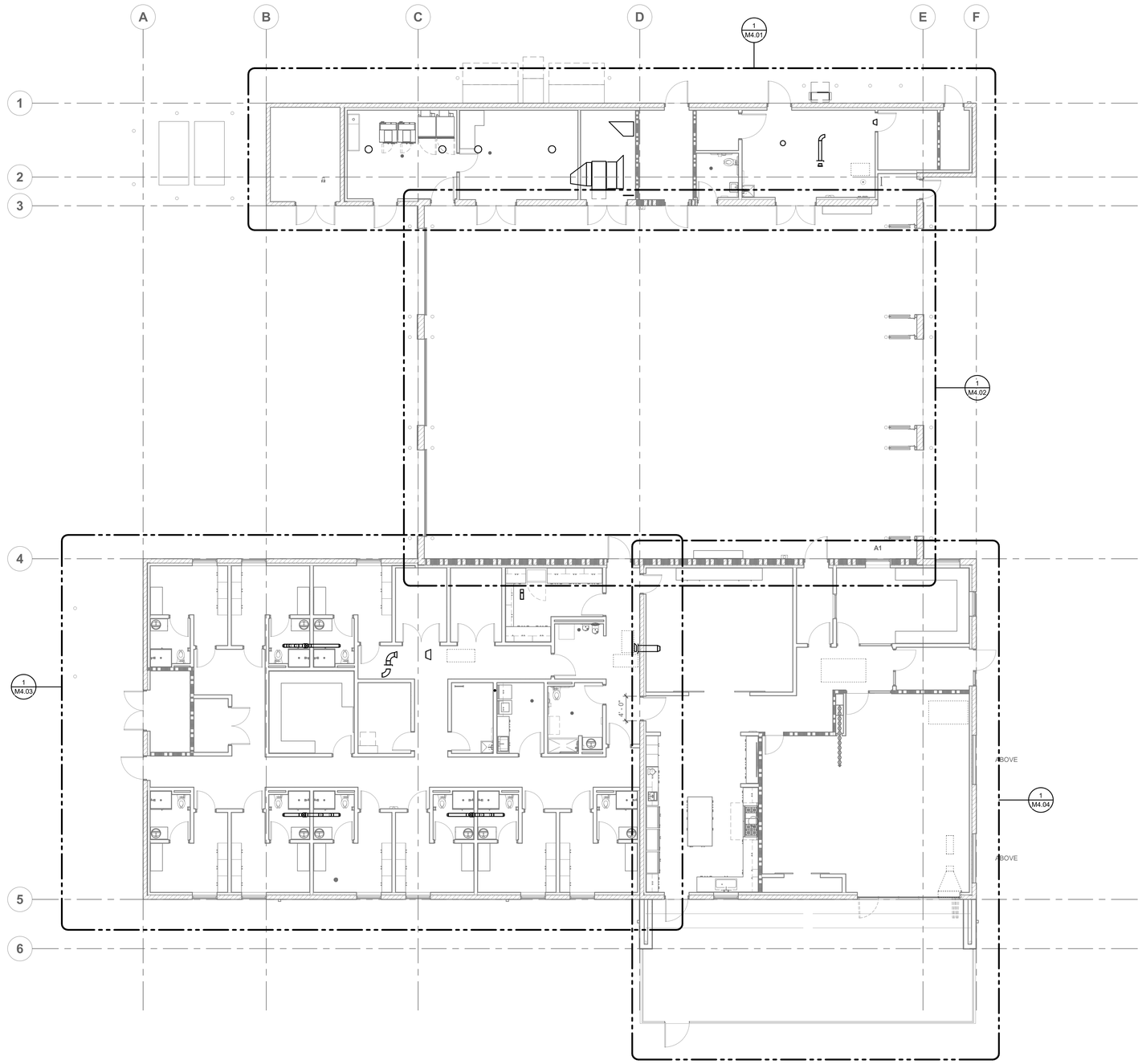

1 OVERALL FLOOR PLAN - MECHANICAL

1/8" = 1'-0"

NORTH

tsk

314 South Water Street,
Suite 100
Henderson, NV 89015
phone: 702.456.3000
fax: 702.898.6209
www.tska.com

THESE DRAWINGS AND SPECIFICATIONS ARE THE PROPERTY OF TATE SNYDER KIMSEY ARCHITECTS AND MAY NOT BE REPRODUCED OR USED FOR ANY PURPOSE WITHOUT THE ARCHITECTS WRITTEN CONSENT. AS INSTRUMENTS OF SERVICE, THESE DOCUMENTS ARE NOT FINAL AND READY FOR USE, AND THEREFORE NOT VALID, UNLESS THEY ARE SEALED, SIGNED AND DATED.

Consultant

IMEG
www.imegcorp.com
4599 LONGLEY LANE
RENO, NV 89502
P: 775.828.4599
PROJECT #22007707.00

IMEG CORP. RESERVES PROPRIETARY RIGHTS, INCLUDING COPYRIGHTS, TO THIS DRAWING AND THE DATA SHOWN THEREON. SAID DRAWING AND/OR DATA ARE THE EXCLUSIVE PROPERTY OF IMEG CORP. AND SHALL NOT BE USED OR REPRODUCED FOR ANY OTHER PROJECT WITHOUT THE EXPRESS WRITTEN APPROVAL AND PARTICIPATION OF IMEG CORP. ©2022 IMEG CORP.

0 1 2 3
REF. SCALE IN INCHES
PROJECT #22007707.00

PLEASE RECYCLE

Project

SPARKS FIRE STATION #6

**6963 WINGFIELD HILLS ROAD,
SPARKS, NV 89436**

Job No: 22-043

Owner

CITY OF SPARKS

PROFESSIONAL ENGINEER - STATE OF NEVADA
KATHY CALLENDER
EXP: 12/31/2024
MECHANICAL
No. 026794

01/03/2024

BID SET

REVISIONS		
REV	DATE	DESCRIPTION

Sheet Title

OVERALL FLOOR PLAN - MECHANICAL

Date: 01/04/2024

Sheet No:

M2.00

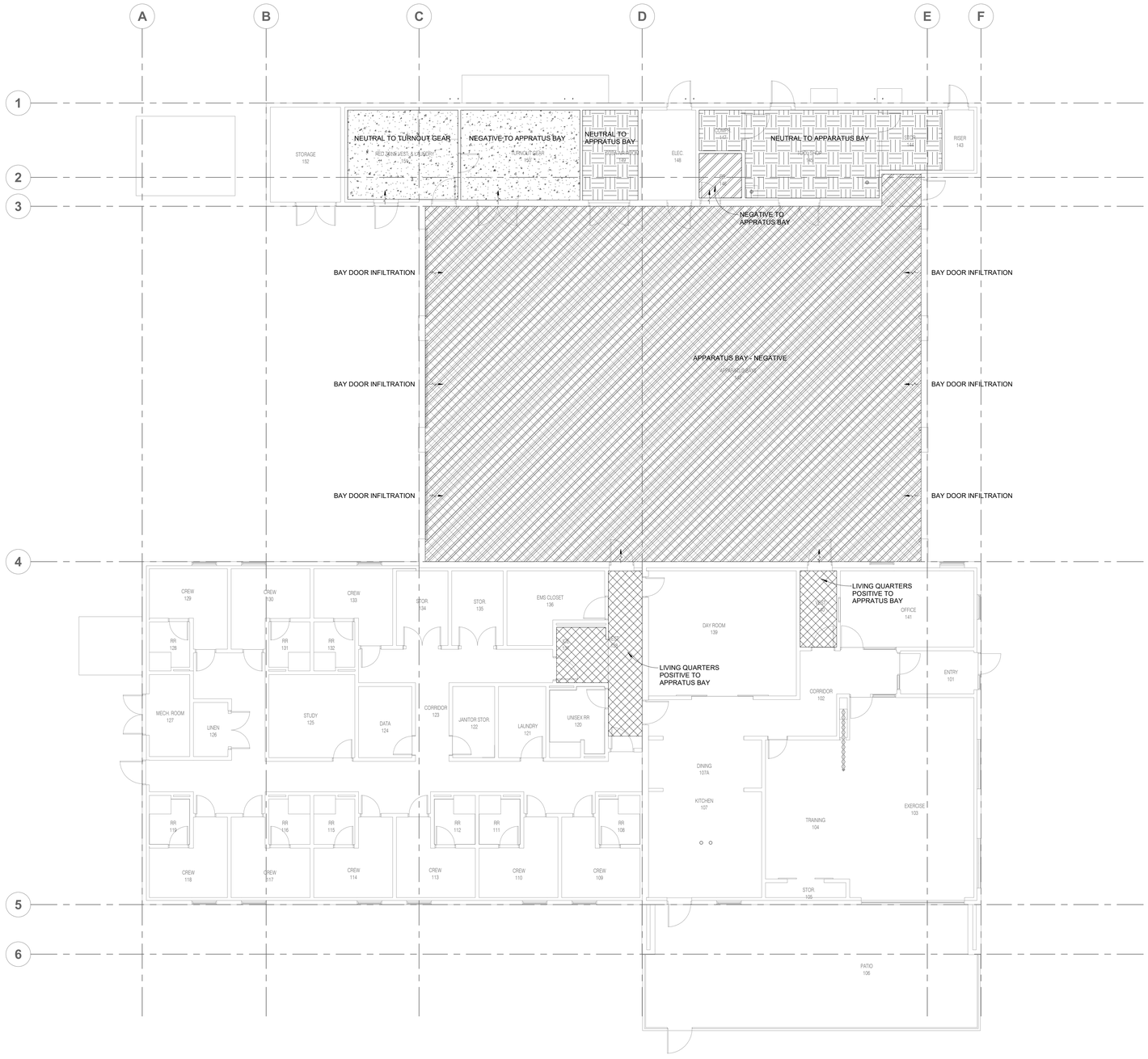

NORTH

1 **OVERALL FLOOR PLAN - MECHANICAL PRESSURIZATION**

1/8" = 1'-0"

tsk

314 South Water Street,
Suite 100
Henderson, NV 89015
phone: 702.456.3000
fax: 702.898.6209
www.tska.com

THESE DRAWINGS AND SPECIFICATIONS ARE THE PROPERTY OF TATE SNYDER KIMSEY ARCHITECTS AND MAY NOT BE REPRODUCED OR USED FOR ANY PURPOSE WITHOUT THE ARCHITECTS WRITTEN CONSENT. AS INSTRUMENTS OF SERVICE, THESE DOCUMENTS ARE NOT FINAL AND READY FOR USE, AND THEREFORE NOT VALID, UNLESS THEY ARE SEALED, SIGNED AND DATED.

Consultant

IMEG
www.imegcorp.com
4599 LONGLEY LANE
RENO, NV 89502
P: 775.828.4599
PROJECT #22007707.00

IMEG CORP. RESERVES PROPRIETARY RIGHTS, INCLUDING COPYRIGHTS, TO THIS DRAWING AND THE DATA SHOWN THEREON. SAID DRAWING AND/OR DATA ARE THE EXCLUSIVE PROPERTY OF IMEG CORP. AND SHALL NOT BE USED OR REPRODUCED FOR ANY OTHER PROJECT WITHOUT THE EXPRESS WRITTEN APPROVAL AND PARTICIPATION OF IMEG CORP. ©2022 IMEG CORP.

0 1 2 3

REF. SCALE IN INCHES PROJECT #22007707.00

PLEASE RECYCLE

Project

SPARKS FIRE STATION #6

6963 WINGFIELD HILLS ROAD, SPARKS, NV 89436

Job No: 22-043

Owner

CITY OF SPARKS

PROFESSIONAL ENGINEER - STATE OF NEVADA
KATHRYN CALLENDER
EXP:12/31/2024
MECHANICAL
No. 026794

01/03/2024

BID SET

REVISIONS		
REV	DATE	DESCRIPTION

Sheet Title

OVERALL FLOOR PLAN - MECHANICAL PRESSURIZATION

Date: 01/04/2024

Sheet No:

M2.01

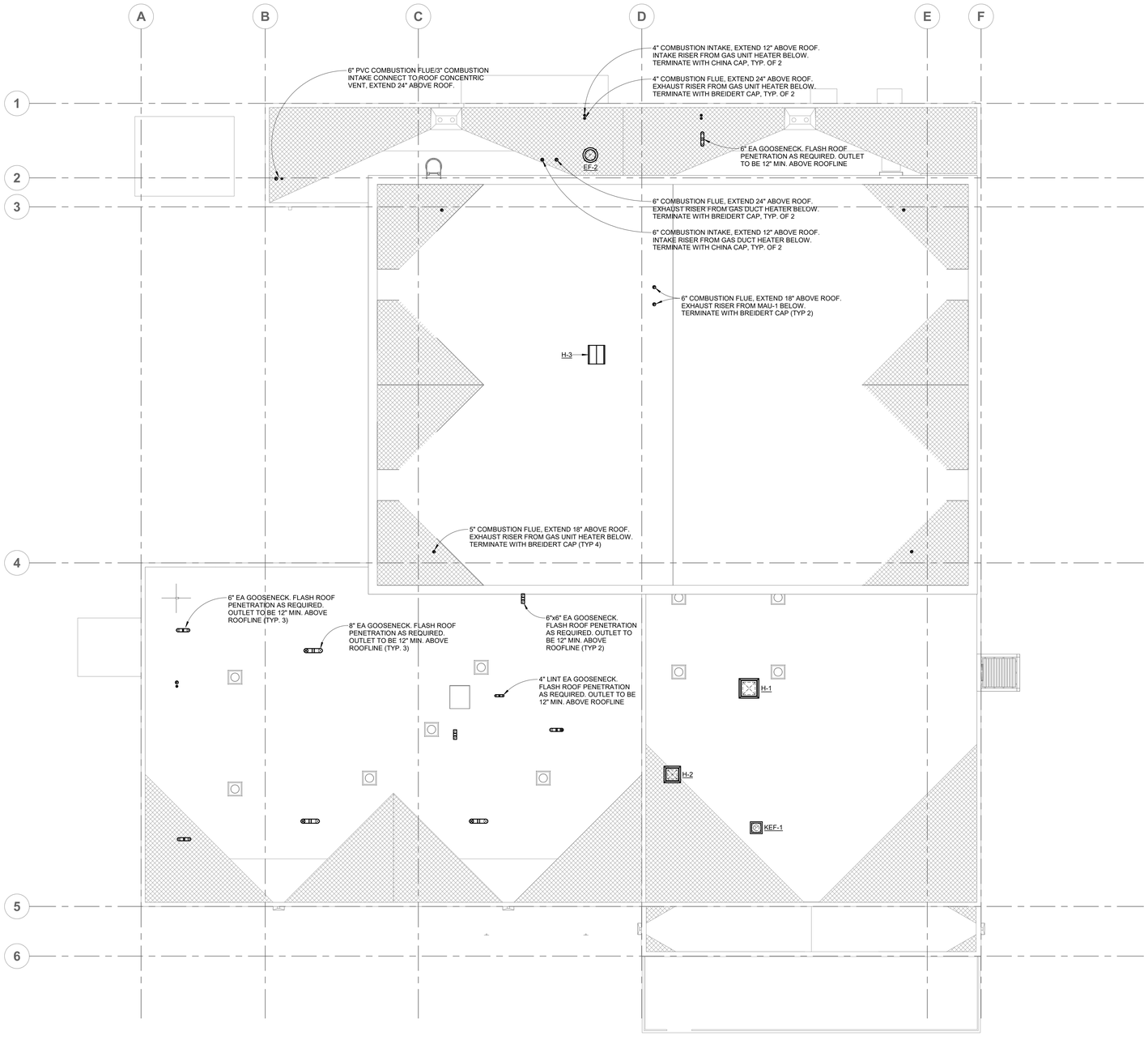

NORTH

1 OVERALL ROOF PLAN - MECHANICAL

1/8" = 1'-0"

SHEET NOTES:

1. ACCESS DOORS ARE REQUIRED FOR ALL DAMPERS INSTALLED ABOVE INACCESSIBLE CEILINGS. COORDINATE EXACT LOCATION OF ALL ACCESS DOORS WITH ARCHITECT PRIOR TO INSTALLATION.
2. VERIFY LOCATION OF ALL THERMOSTATS WITH ARCHITECT PRIOR TO INSTALLATION. MOUNT ALL THERMOSTATS @48" A.F.F. IN ACCORDANCE WITH ADA STANDARDS. PROVIDE LOCKING COVERS FOR T-STATS.
3. VERIFY AND COORDINATE FRAME AND BORDER TYPE REQUIREMENTS FOR AIR DEVICES WITH ARCHITECTURAL CEILING PLANS PRIOR TO ORDERING.
4. DUCT SIZES SHOWN ARE THE CLEAR INSIDE DIMENSIONS.
5. THE MECHANICAL CONTRACTOR SHALL VERIFY THE LOCATION OF ALL ROOF MOUNTED EQUIPMENT AND ROOF PENETRATIONS WITH ARCHITECT AND STRUCTURAL ENGINEER PRIOR TO COMMENCING WORK.
6. THE MECHANICAL CONTRACTOR SHALL COORDINATE LOCATION AND ROUTING OF HVAC EQUIPMENT AND DUCTWORK WITH OTHER TRADES PRIOR TO COMMENCING WORK.
7. ALL EXHAUST OUTLETS SHALL BE LOCATED MIN. OF 10'-0" FROM ANY OUTSIDE AIR INTAKES.
8. THE CUTTING, NOTCHING AND BORING OF HOLES IN FLOOR JOIST AND WALL STUDS SHALL BE IN ACCORDANCE WITH THE LATEST APPROVED EDITION OF THE INTERNATIONAL BUILDING CODE.
9. CONTRACTOR SHALL BE RESPONSIBLE FOR ALL CUTTING AND PATCHING AS REQUIRED TO ACCOMMODATE HIS WORK.
10. REFER TO THE MECHANICAL DIAGRAMS THAT APPLY TO THE WORK ON THIS DRAWING. THESE DIAGRAMS PROVIDE GUIDANCE AS TO INSTALLATION INTENT AND DO NOT NECESSARILY SHOW ALL COMPONENTS REQUIRED.

tsk

314 South Water Street,
Suite 100
Henderson, NV 89015
phone: 702.456.3000
fax: 702.898.6209
www.tska.com

THESE DRAWINGS AND SPECIFICATIONS ARE THE PROPERTY OF TATE SNYDER KIMSEY ARCHITECTS AND MAY NOT BE REPRODUCED OR USED FOR ANY PURPOSE WITHOUT THE ARCHITECTS WRITTEN CONSENT. AS INSTRUMENTS OF SERVICE, THESE DOCUMENTS ARE NOT FINAL AND READY FOR USE, AND THEREFORE NOT VALID, UNLESS THEY ARE SEALED, SIGNED AND DATED.

Consultant

IMEG
www.imegcorp.com
4599 LONGLEY LANE
RENO, NV 89502
P: 775.828.4889
PROJECT #22007707.00

IMEG CORP. RESERVES PROPRIETARY RIGHTS, INCLUDING COPYRIGHTS, TO THIS DRAWING AND THE DATA SHOWN THEREON. SAID DRAWING AND/OR DATA ARE THE EXCLUSIVE PROPERTY OF IMEG CORP. AND SHALL NOT BE USED OR REPRODUCED FOR ANY OTHER PROJECT WITHOUT THE EXPRESS WRITTEN APPROVAL AND PARTICIPATION OF IMEG CORP. ©2022 IMEG CORP.

0 1 2 3
REF. SCALE IN INCHES

PROJECT #22007707.00

PLEASE RECYCLE

Project

SPARKS FIRE STATION #6

6963 WINGFIELD HILLS ROAD, SPARKS, NV 89436

Job No: 22-043

Owner

CITY OF SPARKS

PROFESSIONAL ENGINEER - STATE OF NEVADA
KATHRYN J. ALLENDER
Exp:12/31/2024
MECHANICAL
No. 02679A

01/03/2024

BID SET

REVISIONS		
REV	DATE	DESCRIPTION

Sheet Title

OVERALL ROOF PLAN - MECHANICAL

Date: 01/04/2024

Sheet No:

M3.00

SHEET NOTES:

1. ACCESS DOORS ARE REQUIRED FOR ALL DAMPERS INSTALLED ABOVE INACCESSIBLE CEILINGS. COORDINATE EXACT LOCATION OF ALL ACCESS DOORS WITH ARCHITECT PRIOR TO INSTALLATION.
2. VERIFY LOCATION OF ALL THERMOSTATS WITH ARCHITECT PRIOR TO INSTALLATION. MOUNT ALL THERMOSTATS @48" A.F.F. IN ACCORDANCE WITH ADA STANDARDS. PROVIDE LOCKING COVERS FOR T-STATS.
3. VERIFY AND COORDINATE FRAME AND BORDER TYPE REQUIREMENTS FOR AIR DEVICES WITH ARCHITECTURAL CEILING PLANS PRIOR TO ORDERING.
4. DUCT SIZES SHOWN ARE THE CLEAR INSIDE DIMENSIONS.
5. THE MECHANICAL CONTRACTOR SHALL VERIFY THE LOCATION OF ALL ROOF MOUNTED EQUIPMENT AND ROOF PENETRATIONS WITH ARCHITECT AND STRUCTURAL ENGINEER PRIOR TO COMMENCING WORK.
6. THE MECHANICAL CONTRACTOR SHALL COORDINATE LOCATION AND ROUTING OF HVAC EQUIPMENT AND DUCTWORK WITH OTHER TRADES PRIOR TO COMMENCING WORK.
7. ALL EXHAUST OUTLETS SHALL BE LOCATED MIN. OF 10'-0" FROM ANY OUTSIDE AIR INTAKES.
8. THE CUTTING, NOTCHING AND BORING OF HOLES IN FLOOR JOIST AND WALL STUDS SHALL BE IN ACCORDANCE WITH THE LATEST APPROVED EDITION OF THE INTERNATIONAL BUILDING CODE.
9. CONTRACTOR SHALL BE RESPONSIBLE FOR ALL CUTTING AND PATCHING AS REQUIRED TO ACCOMMODATE HIS WORK.
10. REFER TO THE MECHANICAL DIAGRAMS THAT APPLY TO THE WORK ON THIS DRAWING. THESE DIAGRAMS PROVIDE GUIDANCE AS TO INSTALLATION INTENT AND DO NOT NECESSARILY SHOW ALL COMPONENTS REQUIRED.

KEYNOTES: (#)

1. COMBUSTION AIR INTAKE LOUVER. SET TOP OF LOUVER 12-2 1/2" AFF. LOUVER IS 30"X18". ITS SIZED PER 2018 UMC SEC. 504.4.1 (2)
2. SET TOP OF EXHAUST LOUVER 12'-2 1/2" AFF
3. SET BOTTOM OF INTAKE LOUVER 1'-5" AFF.
4. SET TOP OF INTAKE LOUVER 12'-2 1/2" AFF.
5. SET BOTTOM OF INTAKE LOUVER 1'-5" AFF.
6. SET TOP OF EXHAUST LOUVER 12'-2 1/2" AFF.
7. SET BOTTOM OF INTAKE LOUVER 10'-10" AFF.
8. 16"x16"EA FROM EF-8. STOP DUCT DROP AT 13'-7" AND FLARE DUCT OUT TO 22"x22". ADD 1/2"x1/2" GA.V. BIRDSCREEN AT INLET. INTERLOCK EF-8 WITH OPERATION OF SCBA COMPRESSOR.
9. SUSPEND EQUIPMENT FROM ROOF FRAMING ABOVE.
10. 6" EA LINT VENT WITH WALL VENT HOODS.
11. ROUTE 4" COMBUSTION INTAKE AND 4" COMBUSTION FLUE FROM GAS FIRED UNIT HEATER UP THROUGH ROOF. EXTEND ABOVE ROOF PER MANUFACTURERS INSTALLATION INSTRUCTIONS.
12. MOUNT OUTDOOR CONDENSER TO CONCRETE PAD. INSTALL MASON INDUSTRY SUPER W WAFFLE PAD UNDER FEET OF CONDENSER. FASTEN CONDENSER WITH (4) 3/8" DIA. ANCHOR BOLTS. 4" CONCRETE PAD FOR CONDENSER (BY OTHERS). ROUTE 1/4" LIQUID REFRIGERANT AND 3/8" GAS REFRIGERANT PIPING FROM CONDESNER (HP-1) TO FAN COIL UNIT (FCU-1) AND 3/8" LIQUID REFRIGERANT AND 5/8" GAS REFRIGERANT PIPING FROM CONDENSER (HP-4) TO FAN COIL UNIT (FCU-4) .
13. ROUTE 6" EA DUCT FROM CEF-11 UP THROUGH ROOF. TERMINATE WITH GOOSENECK.
14. 6" PVC COMBUSTION FLUE/INTAKE. CONNECT TO WATER HEATER, RISE UP, TERMINATE WITH CONCENTRIC ROOF VENT.
15. 4" PVC COMBUSTION INTAKE. CONNECT TO WATER HEATER, RISE UP, TERMINATE WITH CONCENTRIC ROOF VENT.

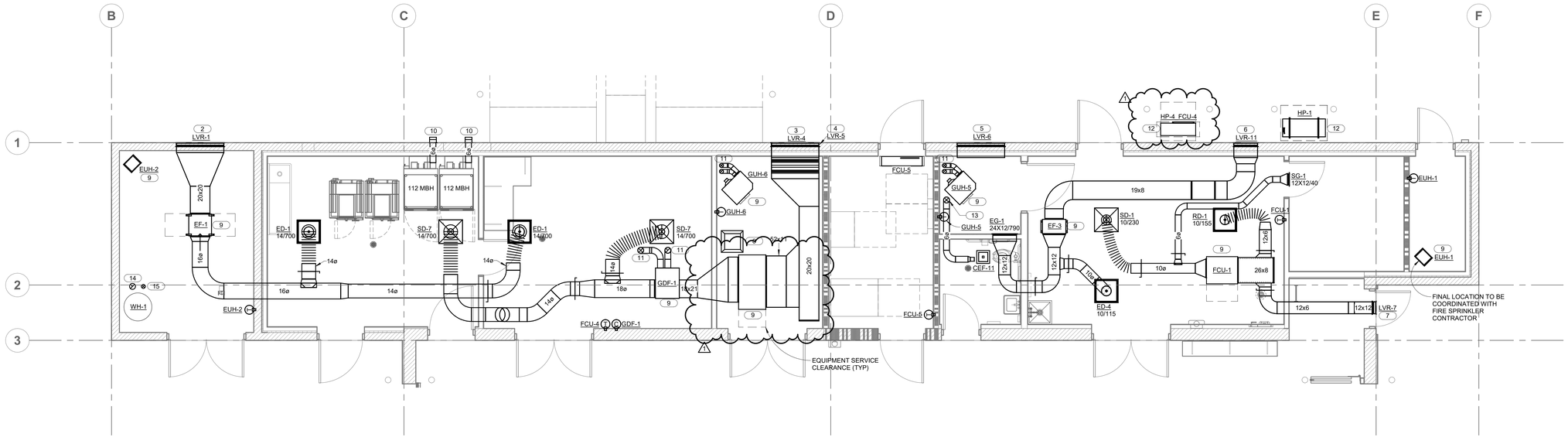

NORTH

1 ENLARGED FLOOR PLAN - HOT ZONE

1/4" = 1'-0"

tsk

314 South Water Street,
Suite 100
Henderson, NV 89015
phone: 702.456.3000
fax: 702.898.6209
www.tska.com

THESE DRAWINGS AND SPECIFICATIONS ARE THE PROPERTY OF TATE SNYDER KIMSEY ARCHITECTS AND MAY NOT BE REPRODUCED OR USED FOR ANY PURPOSE WITHOUT THE ARCHITECTS WRITTEN CONSENT. AS INSTRUMENTS OF SERVICE, THESE DOCUMENTS ARE NOT FINAL AND READY FOR USE, AND THEREFORE NOT VALID, UNLESS THEY ARE SEALED, SIGNED AND DATED.

Consultant

IMEG
www.imegcorp.com
4599 LONGLEY LANE
RENO, NV 89502
P: 775.828.4999
PROJECT #22007707.00

IMEG CORP. RESERVES PROPRIETARY RIGHTS, INCLUDING COPYRIGHTS, TO THIS DRAWING AND THE DATA SHOWN THEREON. SAID DRAWING AND/OR DATA ARE THE EXCLUSIVE PROPERTY OF IMEG CORP. AND SHALL NOT BE USED OR REPRODUCED FOR ANY OTHER PROJECT WITHOUT THE EXPRESS WRITTEN APPROVAL AND PARTICIPATION OF IMEG CORP. ©2022 IMEG CORP.

0 1 2 3
REF. SCALE IN INCHES PROJECT #22007707.00

PLEASE RECYCLE

Project

SPARKS FIRE STATION #6

6963 WINGFIELD HILLS ROAD, SPARKS, NV 89436

Job No: 22-043

Owner

CITY OF SPARKS

PROFESSIONAL ENGINEER - STATE OF NEVADA
KATHRYN J. CALLENDER
Exp:12/31/2024
MECHANICAL
No. 026794
01/03/2024

BID SET

REVISIONS		
REV	DATE	DESCRIPTION
1	05/31/23	Plan Check Responses

Sheet Title

MECHANICAL ENLARGED PLANS

Date: 01/04/2024

Sheet No:

M4.01

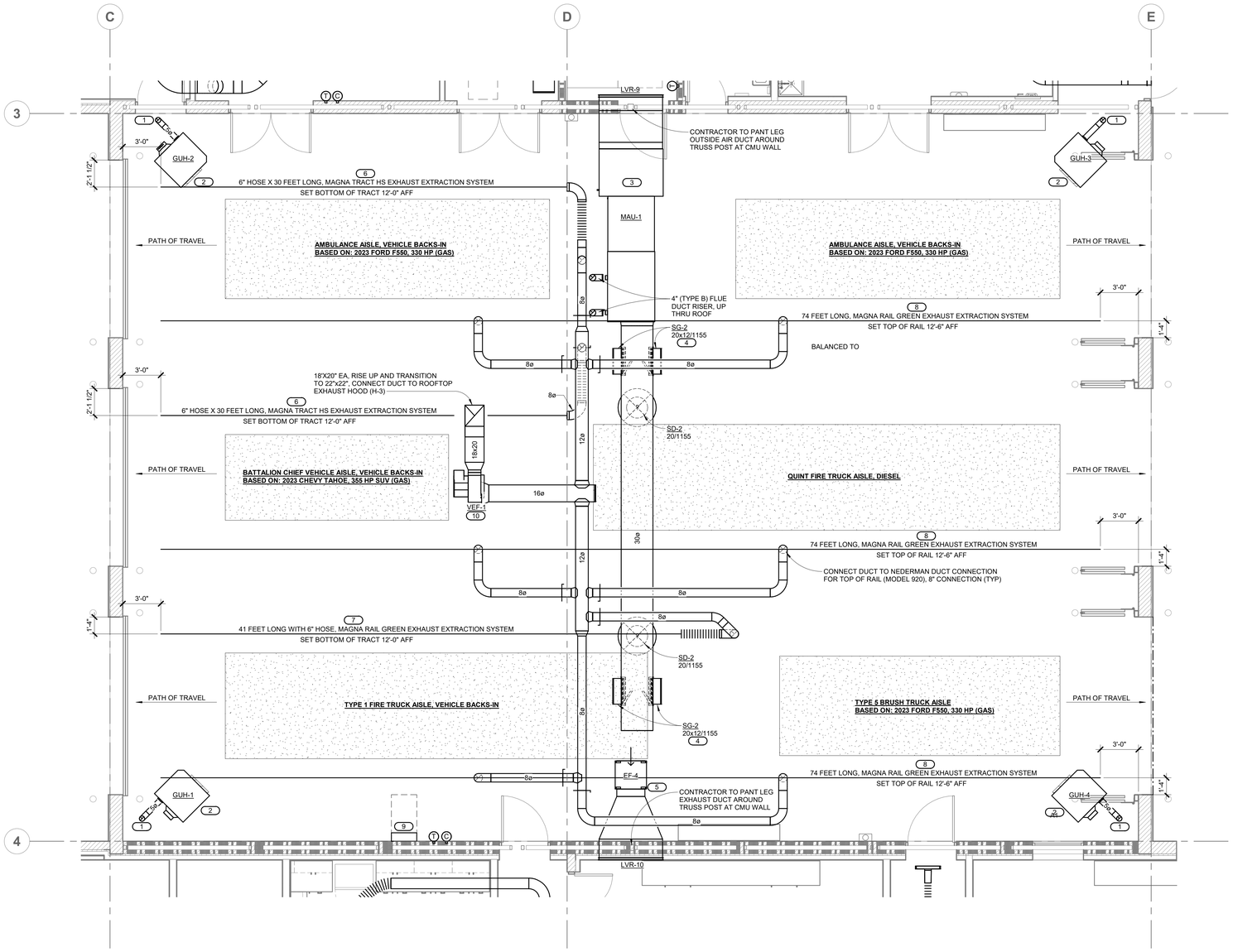

1 ENLARGED FLOOR PLAN - APPARATUS BAY

1/4" = 1'-0"

COMBUSTION AIR:

A. COMBUSTION AIR CALCULATION:

BASED ON 2018 UMC, SEC. 701.4.1
GAS INPUT: 150,000 BTUH X 4 = 600,000 BTUH + 418 MBH = 1,018,000 BTUH
CODE REQUIREMENT: 50 CUBIC FEET PER 1000 BTUH INPUT.
CALCULATION: 1,018,000 BTUH/1000 = 1018 X 50 = 50,900 CUBIC FEET

APPARATUS BAY ROOM VOLUME:
FLOOR AREA: 4620 S.F.
ROOM HEIGHT: 27 FT HIGH
VOLUME: 124,740 CUBIC FEET
CONCLUSION: ROOM VOLUME MEETS CODE

SHEET NOTES:

1. ACCESS DOORS ARE REQUIRED FOR ALL DAMPERS INSTALLED ABOVE INACCESSIBLE CEILINGS. COORDINATE EXACT LOCATION OF ALL ACCESS DOORS WITH ARCHITECT PRIOR TO INSTALLATION.
2. VERIFY LOCATION OF ALL THERMOSTATS WITH ARCHITECT PRIOR TO INSTALLATION. MOUNT ALL THERMOSTATS @48" A.F.F. IN ACCORDANCE WITH ADA STANDARDS. PROVIDE LOCKING COVERS FOR T-STATS.
3. VERIFY AND COORDINATE FRAME AND BORDER TYPE REQUIREMENTS FOR AIR DEVICES WITH ARCHITECTURAL CEILING PLANS PRIOR TO ORDERING.
4. DUCT SIZES SHOWN ARE THE CLEAR INSIDE DIMENSIONS.
5. THE MECHANICAL CONTRACTOR SHALL VERIFY THE LOCATION OF ALL ROOF MOUNTED EQUIPMENT AND ROOF PENETRATIONS WITH ARCHITECT AND STRUCTURAL ENGINEER PRIOR TO COMMENCING WORK.
6. THE MECHANICAL CONTRACTOR SHALL COORDINATE LOCATION AND ROUTING OF HVAC EQUIPMENT AND DUCTWORK WITH OTHER TRADES PRIOR TO COMMENCING WORK.
7. ALL EXHAUST OUTLETS SHALL BE LOCATED MIN. OF 10'-0" FROM ANY OUTSIDE AIR INTAKES.
8. THE CUTTING, NOTCHING AND BORING OF HOLES IN FLOOR JOIST AND WALL STUDS SHALL BE IN ACCORDANCE WITH THE LATEST APPROVED EDITION OF THE INTERNATIONAL BUILDING CODE.
9. CONTRACTOR SHALL BE RESPONSIBLE FOR ALL CUTTING AND PATCHING AS REQUIRED TO ACCOMMODATE HIS WORK.
10. REFER TO THE MECHANICAL DIAGRAMS THAT APPLY TO THE WORK ON THIS DRAWING. THESE DIAGRAMS PROVIDE GUIDANCE AS TO INSTALLATION INTENT AND DO NOT NECESSARILY SHOW ALL COMPONENTS REQUIRED.

KEYNOTES: (#)

1. ROUTE 5" COMBUSTION FLUE FROM GAS FIRED UNIT HEATER UP THROUGH ROOF. EXTEND ABOVE ROOF PER MANUFACTURERS INSTALLATION INSTRUCTIONS.
2. SUSPEND EQUIPMENT FROM ROOF FRAMING ABOVE.
3. SUSPEND EQUIPMENT FROM ROOF FRAMING ABOVE. CONNECT OUTSIDE AIR DUCT FROM INTAKE LOUVER TO BACK OF MAU-1. INTALL FLEXIBLE DUCT CONNECTOR AT INLET AND OUTLET OPENINGS.
4. ROTATE DRUM LOUVER 15 DEGREES BELOW HORIZONTAL.
5. SUSPEND EXHAUST FAN FROM ROOF FRAMING ABOVE. ADD OSHA GUARD AT INLET OF FAN. CONNECT EXHAUST DUCT FROM FAN OUTLET TO EXHAUST WALL LOUVER.
6. INSTALL NEDERMAN 30-FOOT MAGNA-TRACT HS EXHAUST EXTRACTION SYSTEM. SEE SHEET M5.02. SUSPEND TRACT SYSTEM FROM ROOF FRAMING ABOVE. CONSULT MANUFACTURER RECOMMENDED INSTALLATION INSTRUCTIONS.
7. INSTALL NEDERMAN 41-FOOT MAGNA-TRACT HS EXHAUST EXTRACTION SYSTEM. SEE SHEET M5.02. SUSPEND TRACT SYSTEM FROM ROOF FRAMING ABOVE. CONSULT MANUFACTURER RECOMMENDED INSTALLATION INSTRUCTIONS.
8. INSTALL NEDERMAN 74-FOOT MAGNA-RAIL GREEN EXHAUST EXTRACTION SYSTEM. SEE SHEET M5.02. SUSPEND TRACT SYSTEM FROM ROOF FRAMING ABOVE. CONSULT MANUFACTURER RECOMMENDED INSTALLATION INSTRUCTIONS.
9. INSTALL NEDERMAN EXHAUST EXTRACTION SYSTEM CONTROL PANEL. SET TOP OF PANEL 6'-0" AFF.

tsk
314 South Water Street,
Suite 100
Henderson, NV 89015
phone: 702.456.3000
fax: 702.898.6209
www.tska.com

THESE DRAWINGS AND SPECIFICATIONS ARE THE PROPERTY OF TATE SNYDER KIMSEY ARCHITECTS AND MAY NOT BE REPRODUCED OR USED FOR ANY PURPOSE WITHOUT THE ARCHITECTS WRITTEN CONSENT. AS INSTRUMENTS OF SERVICE, THESE DOCUMENTS ARE NOT FINAL AND READY FOR USE, AND THEREFORE NOT VALID, UNLESS THEY ARE SEALED, SIGNED AND DATED.

Consultant

IMEG
www.imegcorp.com
4589 LONGLEY LANE
RENO, NV 89502
P: 775.828.4889
PROJECT #22007707.00

IMEG CORP. RESERVES PROPRIETARY RIGHTS, INCLUDING COPYRIGHTS, TO THIS DRAWING AND THE DATA SHOWN THEREON. SAID DRAWING AND/OR DATA ARE THE EXCLUSIVE PROPERTY OF IMEG CORP. AND SHALL NOT BE USED OR REPRODUCED FOR ANY OTHER PROJECT WITHOUT THE EXPRESS WRITTEN APPROVAL AND PARTICIPATION OF IMEG CORP. ©2022 IMEG CORP.

0 1 2 3
REF. SCALE IN INCHES PROJECT #22007707.00

PLEASE RECYCLE

Project
SPARKS FIRE STATION #6

6963 WINGFIELD HILLS ROAD, SPARKS, NV 89436

Job No: 22-043

Owner
CITY OF SPARKS

PROFESSIONAL ENGINEER - STATE OF NEVADA
KATHRYN J. DALLENDER
Exp:12/31/2024
MECHANICAL
No. 026794
01/03/2024

BID SET

REVISIONS		
REV	DATE	DESCRIPTION

Sheet Title
MECHANICAL ENLARGED PLANS

Date: 01/04/2024
Sheet No:

M4.02

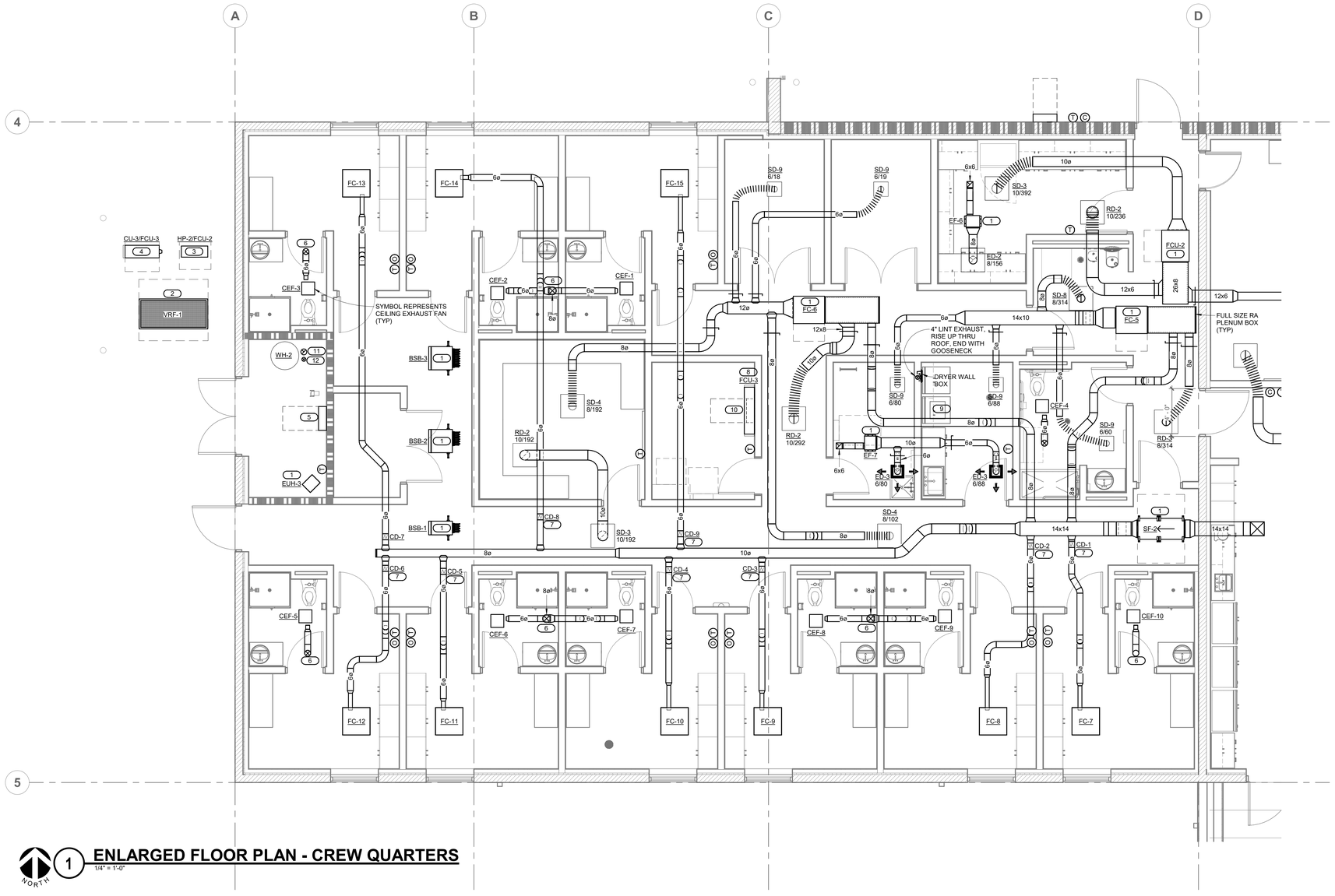

1 ENLARGED FLOOR PLAN - CREW QUARTERS

1/4" = 1'-0"

NORTH

SHEET NOTES:

1. ACCESS DOORS ARE REQUIRED FOR ALL DAMPERS INSTALLED ABOVE INACCESSIBLE CEILINGS. COORDINATE EXACT LOCATION OF ALL ACCESS DOORS WITH ARCHITECT PRIOR TO INSTALLATION.
2. VERIFY LOCATION OF ALL THERMOSTATS WITH ARCHITECT PRIOR TO INSTALLATION. MOUNT ALL THERMOSTATS @48" A.F.F. IN ACCORDANCE WITH ADA STANDARDS. PROVIDE LOCKING COVERS FOR T-STATS.
3. VERIFY AND COORDINATE FRAME AND BORDER TYPE REQUIREMENTS FOR AIR DEVICES WITH ARCHITECTURAL CEILING PLANS PRIOR TO ORDERING.
4. DUCT SIZES SHOWN ARE THE CLEAR INSIDE DIMENSIONS.
5. THE MECHANICAL CONTRACTOR SHALL VERIFY THE LOCATION OF ALL ROOF MOUNTED EQUIPMENT AND ROOF PENETRATIONS WITH ARCHITECT AND STRUCTURAL ENGINEER PRIOR TO COMMENCING WORK.
6. THE MECHANICAL CONTRACTOR SHALL COORDINATE LOCATION AND ROUTING OF HVAC EQUIPMENT AND DUCTWORK WITH OTHER TRADES PRIOR TO COMMENCING WORK.
7. ALL EXHAUST OUTLETS SHALL BE LOCATED MIN. OF 10'-0" FROM ANY OUTSIDE AIR INTAKES.
8. THE CUTTING, NOTCHING AND BORING OF HOLES IN FLOOR JOIST AND WALL STUDS SHALL BE IN ACCORDANCE WITH THE LATEST APPROVED EDITION OF THE INTERNATIONAL BUILDING CODE.
9. CONTRACTOR SHALL BE RESPONSIBLE FOR ALL CUTTING AND PATCHING AS REQUIRED TO ACCOMMODATE HIS WORK.
10. REFER TO THE MECHANICAL DIAGRAMS THAT APPLY TO THE WORK ON THIS DRAWING. THESE DIAGRAMS PROVIDE GUIDANCE AS TO INSTALLATION INTENT AND DO NOT NECESSARILY SHOW ALL COMPONENTS REQUIRED.

KEYNOTES: (#)

1. SUSPEND EQUIPMENT FROM ROOF FRAMING ABOVE.
2. MOUNT OUTDOOR CONDENSER TO CONCRETE PAD. INSTALL MASON INDUSTRY SUPER W WAFFLE PAD UNDER FEET OF CONDENSER. FASTEN CONDENSER WITH (6) 3/8" DIA. ANCHOR BOLTS. 4" CONCRETE PAD FOR CONDENSER (BY OTHERS). ROUTE REFRIGERANT FROM CONDENSER (VRF-1) TO BRANCH SELECTOR BOXES (BSB-1, 2 & 3). SEE SHEET M5.01 FOR REFRIGERANT PIPE SIZING AND CIRCUITING.
3. MOUNT OUTDOOR CONDENSER TO CONCRETE PAD. INSTALL MASON INDUSTRY SUPER W WAFFLE PAD UNDER FEET OF CONDENSER. FASTEN CONDENSER WITH (4) 3/8" DIA. ANCHOR BOLTS. 4" CONCRETE PAD FOR CONDENSER (BY OTHERS). ROUTE 1/4" LIQUID REFRIGERANT AND 3/8" GAS REFRIGERANT PIPING FROM CONDESNER (HP-2) TO FAN COIL UNIT (FCU-2).
4. MOUNT OUTDOOR CONDENSER TO CONCRETE PAD. INSTALL MASON INDUSTRY SUPER W WAFFLE PAD UNDER FEET OF CONDENSER. FASTEN CONDENSER WITH (4) 3/8" DIA. ANCHOR BOLTS. 4" CONCRETE PAD FOR CONDENSER (BY OTHERS). ROUTE 1/4" LIQUID REFRIGERANT AND 5/8" GAS REFRIGERANT PIPING FROM CONDESNER (HP-3) TO FAN COIL UNIT (FCU-3).
5. INSTALL DAIKIN VRF SYSTEM ITOUCH CONTROL PANEL. SET TOP OF PANEL 5'-6" AFF.
6. ROUTE 6" EA DUCT FROM CEILING EXHAUST FAN UP THROUGH ROOF. TERMINATE WITH ROOF VENT CAP ON TOP OF 14" ROOF CURB.
7. INSTALL CONTROL DAMPER IN DUCT. WIRE DAMPER ACTUATOR TO OCCUPANCY SESNOR IN CREW QUARTERS. DAMPER TO CLOSE WHEN SENSOR DOES NOT SENSE PERSON IN ROOM. SENSOR TO HAVE 10-MIN. DELAY.
8. SET BOTTOM OF FCU-3, 9'-11" ABOVE FLOOR.
9. SUSPEND LINT EXHAUST FAN (LEF-1) EQUIPMENT FROM ROOF FRAMING ABOVE. INTERLOCK FAN OPERATION TO CLOTHES DRYER. ROUTE 4" LINT EXHAUST DUCT FROM FAN TO EXTERIOR WALL, TERMINATE WITH WALL VENT CAP.
10. INSTALL ALERTON CONTROL PANEL. SET TOP OF PANEL 5'-6" AFF.
11. 6" PVC COMBUSTION FLUE/INTAKE. CONNECT TO WATER HEATER, RISE UP, TERMINATE WITH CONCENTRIC ROOF VENT.
12. 4" PVC COMBUSTION INTAKE. CONNECT TO WATER HEATER, RISE UP, TERMINATE WITH CONCENTRIC ROOF VENT.
13. ROUTE 8" EA DUCT FROM CEILING EXHAUST FANS UP THROUGH ROOF. TERMINATE WITH ROOF VENT CAP ON TOP OF 14" ROOF CURB.

tsk

314 South Water Street,
Suite 100
Henderson, NV 89015
phone: 702.456.3000
fax: 702.898.6209
www.tska.com

THESE DRAWINGS AND SPECIFICATIONS ARE THE PROPERTY OF TATE SNYDER KIMSEY ARCHITECTS AND MAY NOT BE REPRODUCED OR USED FOR ANY PURPOSE WITHOUT THE ARCHITECTS WRITTEN CONSENT. AS INSTRUMENTS OF SERVICE, THESE DOCUMENTS ARE NOT FINAL AND READY FOR USE, AND THEREFORE NOT VALID, UNLESS THEY ARE SEALED, SIGNED AND DATED.

Consultant

IMEG
www.imeg.com
6595 LONGLEY LANE
RENO, NV 89502
P: 775.826.4555
PROJECT #22007707.00

IMEG CORP. RESERVES PROPRIETARY RIGHTS, INCLUDING COPYRIGHTS, TO THIS DRAWING AND THE DATA SHOWN THEREON. SAID DRAWING AND/OR DATA ARE THE EXCLUSIVE PROPERTY OF IMEG CORP. AND SHALL NOT BE USED OR REPRODUCED FOR ANY OTHER PROJECT WITHOUT THE EXPRESS WRITTEN APPROVAL AND PARTICIPATION OF IMEG CORP. ©2022 IMEG CORP.

0 1 2 3
REF. SCALE IN INCHES PROJECT #22007707.00

PLEASE RECYCLE

Project

SPARKS FIRE STATION #6

6963 WINGFIELD HILLS ROAD, SPARKS, NV 89436

Job No: 22-043

Owner

CITY OF SPARKS

PROFESSIONAL ENGINEER - STATE OF NEVADA
KATHRYN J. FALLENDER
Exp:12/31/2024
MECHANICAL
No. 02679A
01/03/2024

BID SET

REVISIONS		
REV	DATE	DESCRIPTION

Sheet Title

MECHANICAL ENLARGED PLANS

Date: 01/04/2024

Sheet No:

M4.03

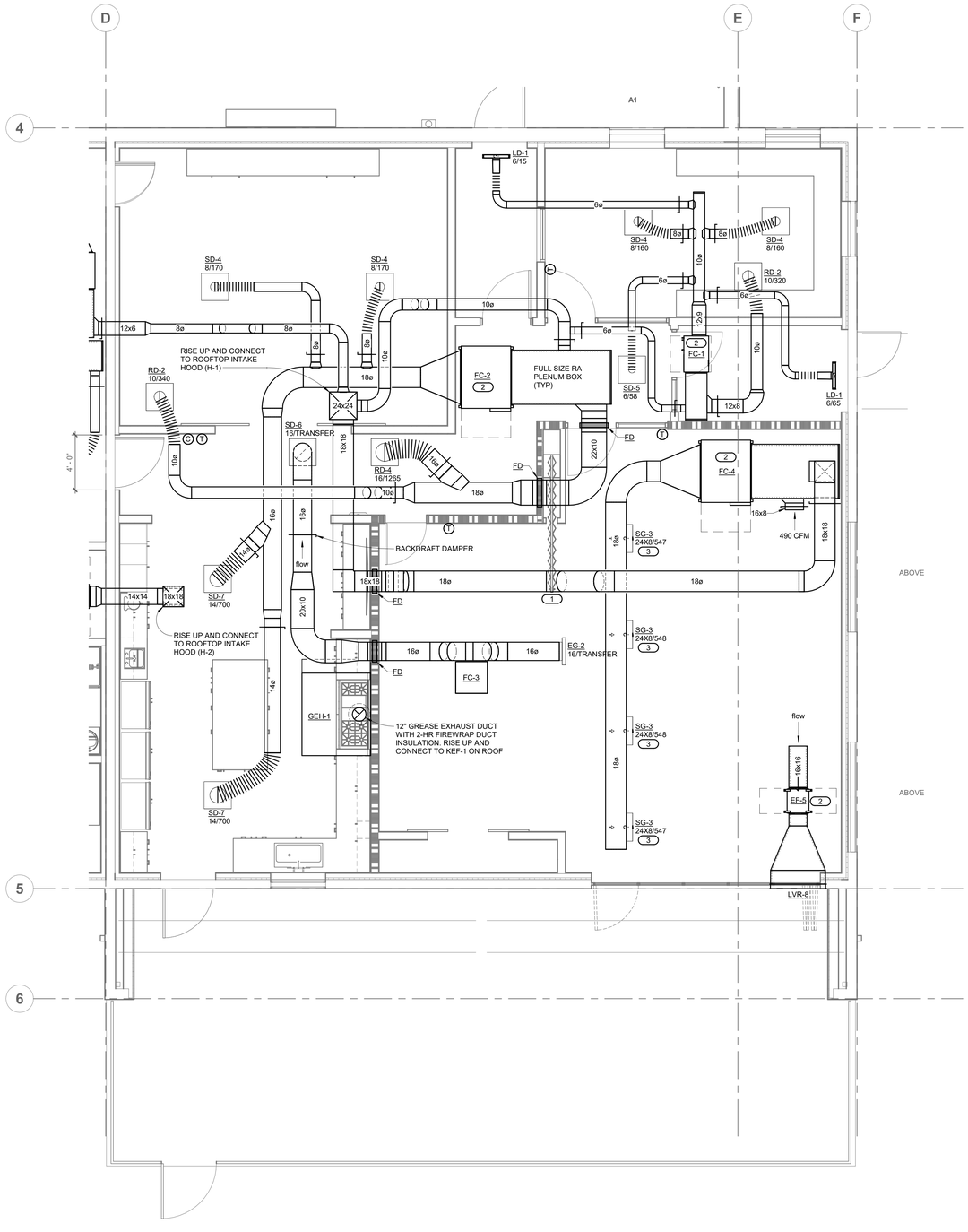

1 ENLARGED FLOOR PLAN - LIVING AREA

1/4" = 1'-0"

NORTH

SHEET NOTES:

1. ACCESS DOORS ARE REQUIRED FOR ALL DAMPERS INSTALLED ABOVE INACCESSIBLE CEILINGS. COORDINATE EXACT LOCATION OF ALL ACCESS DOORS WITH ARCHITECT PRIOR TO INSTALLATION.
2. VERIFY LOCATION OF ALL THERMOSTATS WITH ARCHITECT PRIOR TO INSTALLATION. MOUNT ALL THERMOSTATS @48" A.F.F. IN ACCORDANCE WITH ADA STANDARDS. PROVIDE LOCKING COVERS FOR T-STATS.
3. VERIFY AND COORDINATE FRAME AND BORDER TYPE REQUIREMENTS FOR AIR DEVICES WITH ARCHITECTURAL CEILING PLANS PRIOR TO ORDERING.
4. DUCT SIZES SHOWN ARE THE CLEAR INSIDE DIMENSIONS.
5. THE MECHANICAL CONTRACTOR SHALL VERIFY THE LOCATION OF ALL ROOF MOUNTED EQUIPMENT AND ROOF PENETRATIONS WITH ARCHITECT AND STRUCTURAL ENGINEER PRIOR TO COMMENCING WORK.
6. THE MECHANICAL CONTRACTOR SHALL COORDINATE LOCATION AND ROUTING OF HVAC EQUIPMENT AND DUCTWORK WITH OTHER TRADES PRIOR TO COMMENCING WORK.
7. ALL EXHAUST OUTLETS SHALL BE LOCATED MIN. OF 10'-0" FROM ANY OUTSIDE AIR INTAKES.
8. THE CUTTING, NOTCHING AND BORING OF HOLES IN FLOOR JOIST AND WALL STUDS SHALL BE IN ACCORDANCE WITH THE LATEST APPROVED EDITION OF THE INTERNATIONAL BUILDING CODE.
9. CONTRACTOR SHALL BE RESPONSIBLE FOR ALL CUTTING AND PATCHING AS REQUIRED TO ACCOMMODATE HIS WORK.
10. REFER TO THE MECHANICAL DIAGRAMS THAT APPLY TO THE WORK ON THIS DRAWING. THESE DIAGRAMS PROVIDE GUIDANCE AS TO INSTALLATION INTENT AND DO NOT NECESSARILY SHOW ALL COMPONENTS REQUIRED.

KEYNOTES: (#)

1. PROVIDE AND INSTALL RETRACTABLE CURTAIN SWITCH. SWITCH IS TO DEACTIVATE FC-3, WHEN THE CURTAIN OPENS AND START-UP WHEN THE CURTAIN IS CLOSED.
2. SUSPEND EQUIPMENT FROM ROOF FRAMING ABOVE.
3. INSTALL DRUM LOUVER HORIZONTAL.

tsk

314 South Water Street,
Suite 100
Henderson, NV 89015
phone: 702.456.3000
fax: 702.898.6209
www.tska.com

THESE DRAWINGS AND SPECIFICATIONS ARE THE PROPERTY OF TATE SNYDER KIMSEY ARCHITECTS AND MAY NOT BE REPRODUCED OR USED FOR ANY PURPOSE WITHOUT THE ARCHITECTS WRITTEN CONSENT. AS INSTRUMENTS OF SERVICE, THESE DOCUMENTS ARE NOT FINAL AND READY FOR USE, AND THEREFORE NOT VALID, UNLESS THEY ARE SEALED, SIGNED AND DATED.

Consultant

IMEG
www.imegcorp.com
4599 LONGLEY LANE
RENO, NV 89502
P: 775.828.4599
PROJECT #22007707.00

IMEG CORP. RESERVES PROPRIETARY RIGHTS, INCLUDING COPYRIGHTS, TO THIS DRAWING AND THE DATA SHOWN THEREON. SAID DRAWING AND/OR DATA ARE THE EXCLUSIVE PROPERTY OF IMEG CORP. AND SHALL NOT BE USED OR REPRODUCED FOR ANY OTHER PROJECT WITHOUT THE EXPRESS WRITTEN APPROVAL AND PARTICIPATION OF IMEG CORP. ©2022 IMEG CORP.

0 1 2 3
REF. SCALE IN INCHES PROJECT #22007707.00

PLEASE RECYCLE

Project
SPARKS FIRE STATION #6

6963 WINGFIELD HILLS ROAD,
SPARKS, NV 89436

Job No: 22-043

Owner
CITY OF SPARKS

CITY OF SPARKS FIRE DEPARTMENT Est. 1905

PROFESSIONAL ENGINEER - STATE OF NEVADA
KATHY CALLENDER
Exp:12/31/2024
MECHANICAL
No. 026794

01/03/2024

BID SET

REVISIONS		
REV	DATE	DESCRIPTION

Sheet Title
MECHANICAL ENLARGED PLAN

Date: 01/04/2024
Sheet No:

M4.04

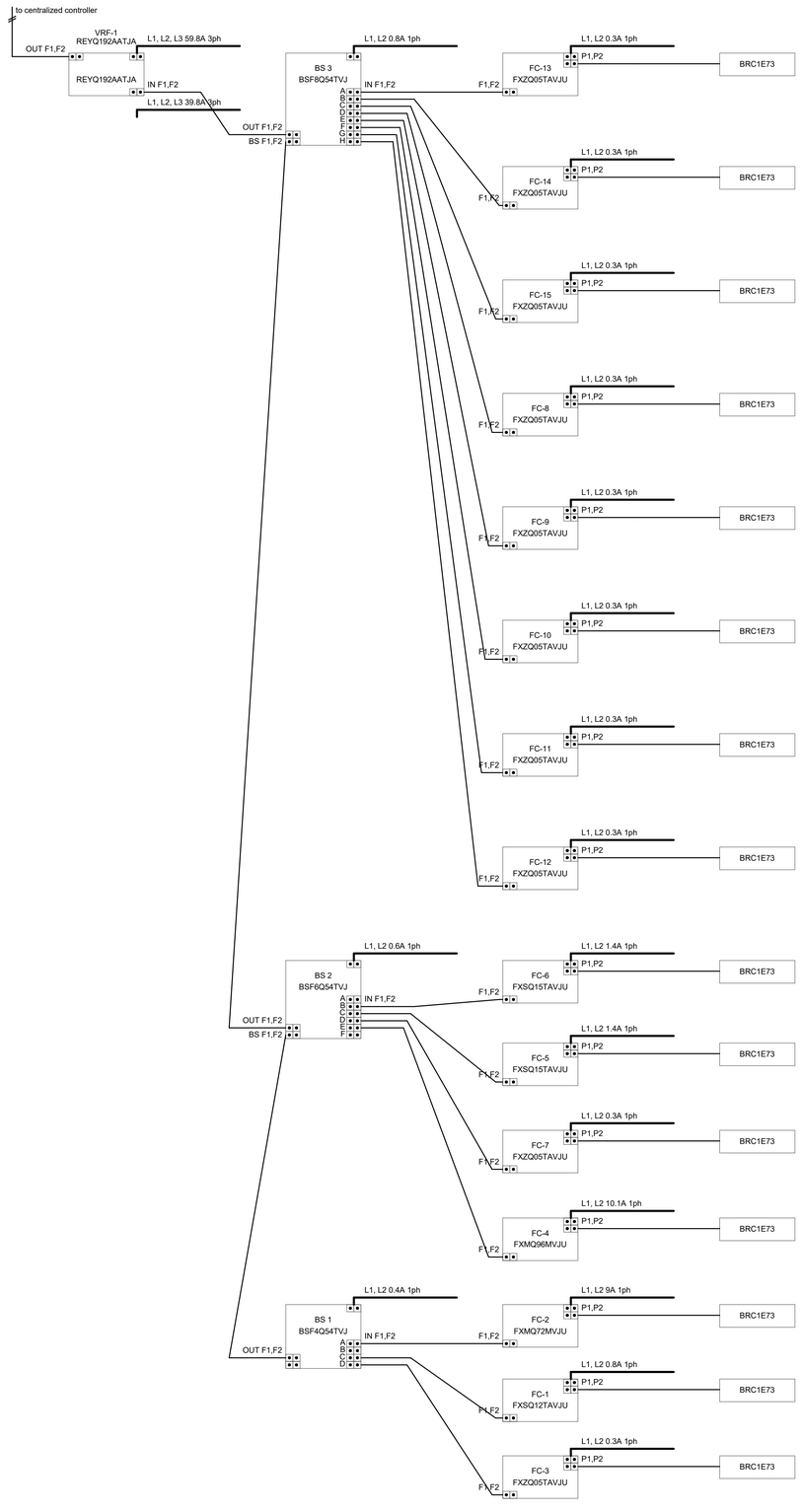

C M5.01 VRF-1 HEAT RECOVERY SYSTEM WIRING DIAGRAM

NTS

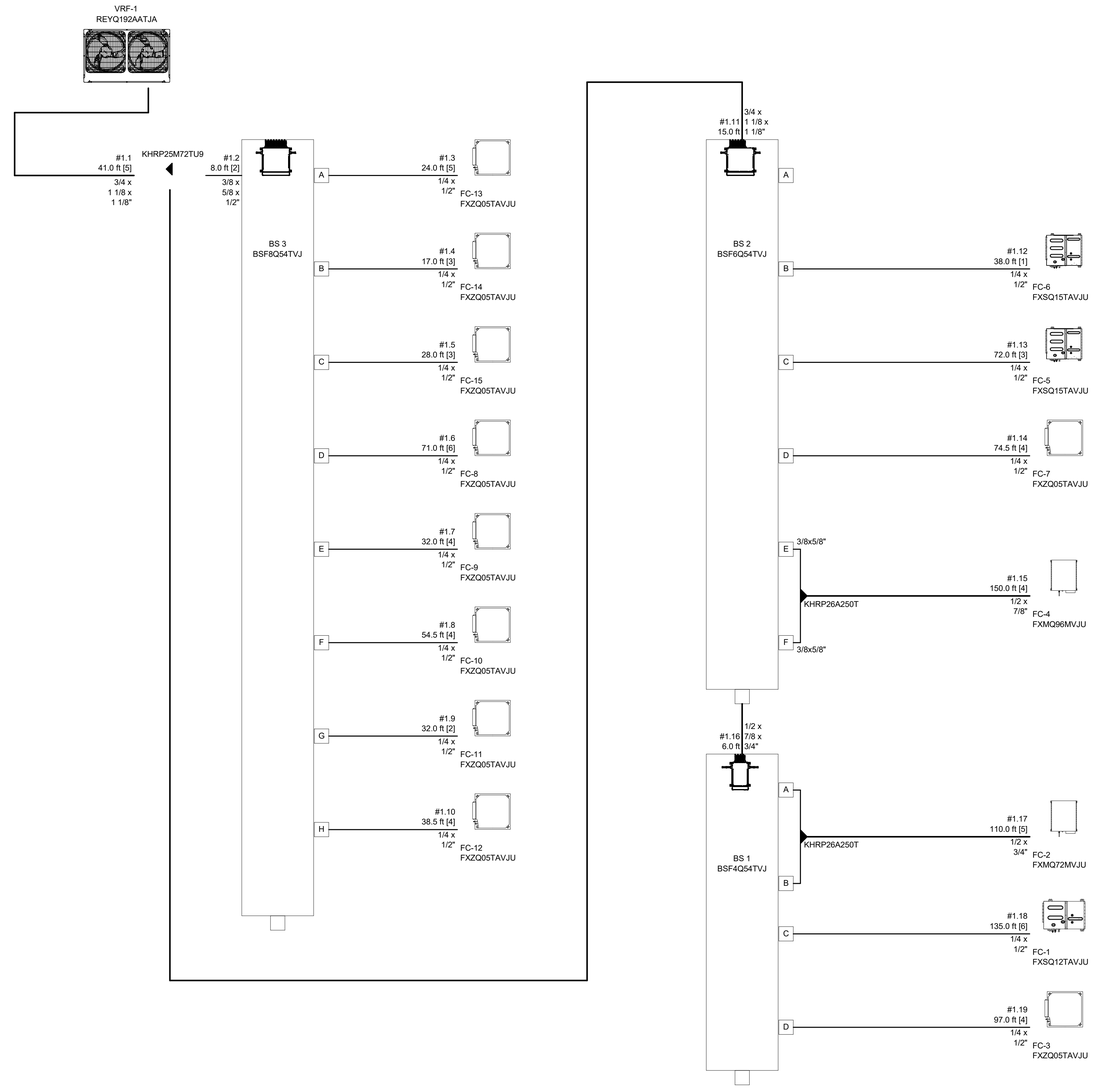

A M5.01 VRF-1 HEAT RECOVERY SYSTEM PIPING DIAGRAM

NTS

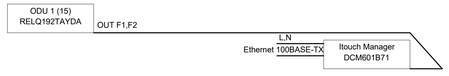

B M5.01 VRF-1 HEAT RECOVERY SYSTEM CTRL WIRING DIAGRAM

NTS

tsk

314 South Water Street,
Suite 100
Henderson, NV 89015
phone: 702.456.3000
fax: 702.898.6209
www.tska.com

THESE DRAWINGS AND SPECIFICATIONS ARE THE PROPERTY OF TATE SNYDER KIMSEY ARCHITECTS AND MAY NOT BE REPRODUCED OR USED FOR ANY PURPOSE WITHOUT THE ARCHITECTS WRITTEN CONSENT. AS INSTRUMENTS OF SERVICE, THESE DOCUMENTS ARE NOT FINAL AND READY FOR USE, AND THEREFORE NOT VALID, UNLESS THEY ARE SEALED, SIGNED AND DATED.

Consultant

IMEG
www.imegcorp.com
4599 LONGLEY LANE
RENO, NV 89502
P: 775.828.4599
PROJECT #22007707.00

IMEG CORP. RESERVES PROPRIETARY RIGHTS, INCLUDING COPYRIGHTS, TO THIS DRAWING AND THE DATA SHOWN THEREON. SAID DRAWING AND/OR DATA ARE THE EXCLUSIVE PROPERTY OF IMEG CORP. AND SHALL NOT BE USED OR REPRODUCED FOR ANY OTHER PROJECT WITHOUT THE EXPRESS WRITTEN APPROVAL AND PARTICIPATION OF IMEG CORP. ©2022 IMEG CORP.

0 1 2 3
REF. SCALE IN INCHES PROJECT #22007707.00

PLEASE RECYCLE

Project

SPARKS FIRE STATION #6

6963 WINGFIELD HILLS ROAD, SPARKS, NV 89436

Job No: 22-043

Owner

CITY OF SPARKS

PROFESSIONAL ENGINEER - STATE OF NEVADA
KATHY CALLENDER
Exp:12/31/2024
MECHANICAL
No. 026794
01/03/2024

BID SET

REVISIONS		
REV	DATE	DESCRIPTION

Sheet Title

MECHANICAL SCHEMATICS

Date: 01/04/2024

Sheet No:

M5.01

Technical data

Mounting height..... 3 - 4 m (10 - 13 ft)
Maximum number of drops per rail..... 4
Hose diameter.....160 mm (6.3 in)
Hose length.....4 m (13 ft)
Total rail length..... 10 m (32.8 ft)

Weight
suction unit.....4,4 kg (9.7 lb)
hose (4 m) and magnetic unit..... 8,0 kg (17.6 lb)
rail, incl. rubber seals.....6,7 kg/m (4.5 lb/ft)

Recommended Airflow..... 590-705 cfm (1000-1200m³ / h)

Temperature resistance
for hose, continuously.....150 °C (300 °F)
for hose, temporary.....180 °C (350 °F)
Material
rubber seals.....EPDM-rubber
suction trolley.....Composite
rail.....Aluminium
hose, upper.....Fabric with Aluminum helix
hose, lower (buss nozzle).....EPDM-rubber

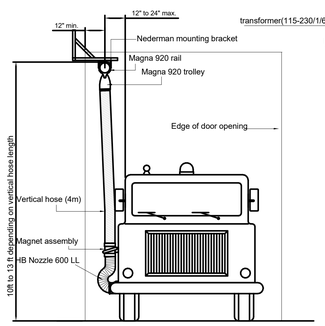

Complete System Consist Of:	Specification	Part No.
Magna Rail:	Length = 10m / 32.8 ft	20916320
Magna Rail Extraction Unit(LL):	... x L= ...160mm (6.3") x 4m (13')	20819964
Nozzle For Low Level Exhaust Pipe:	HB600LL Type , Fixed ... x L= ...160mm (6.3") x 600mm±100 (23.6±4")	20802264
Entrance Strut Assembly:	Detail A:	20ENTSTRT
Middle Strut Assembly:	Detail B:	20MIDSTRT
End Strut Assembly:	Detail C:	20ENDSTRT

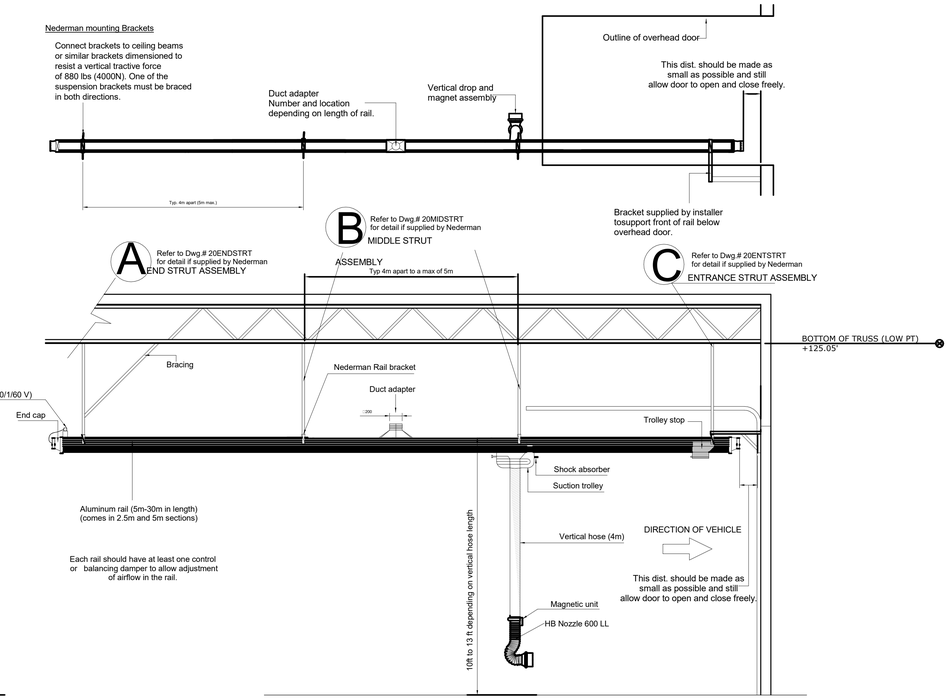

A
M0.14

NEDERMAN MAGNA RAIL GREEN EXHAUST EXTRACTION SYSTEM SCHEMATIC

NTS

Building Utilities By Others:
Transformer:
Primary
115v/230v/1/60Hz - 5VA
24 v Secondary

Technical data

Mounting height..... 3–4m (10-12 1/2 ft)
Maximum number of drops per rail..... 1
Hose diameter..... 160 mm (6.3 in)
Hose length..... 3 m (10 ft)
Total Track length..... 17.7m (58.0ft)
Power supply (Transformer).....230 V or 115 V 1-PHASE

Weight
Extraction Unit includes nozzle..... 19 kg (42 lb)
Track Complete..... 4.0 kg/m (8.8 lb/ft)

Recommended Airflow:..... 590-705 cfm (1000-1200m³ / h)

Temperature resistance

for hose, continuously..... 150 °C (300 °F)
for hose, temporary..... 180 °C (350 °F)

Material

suction trolley..... Aluminium
rail..... Aluminium
hose, upper..... Fabric with Aluminum helix
hose, lower (buss nozzle)..... EPDM-rubber

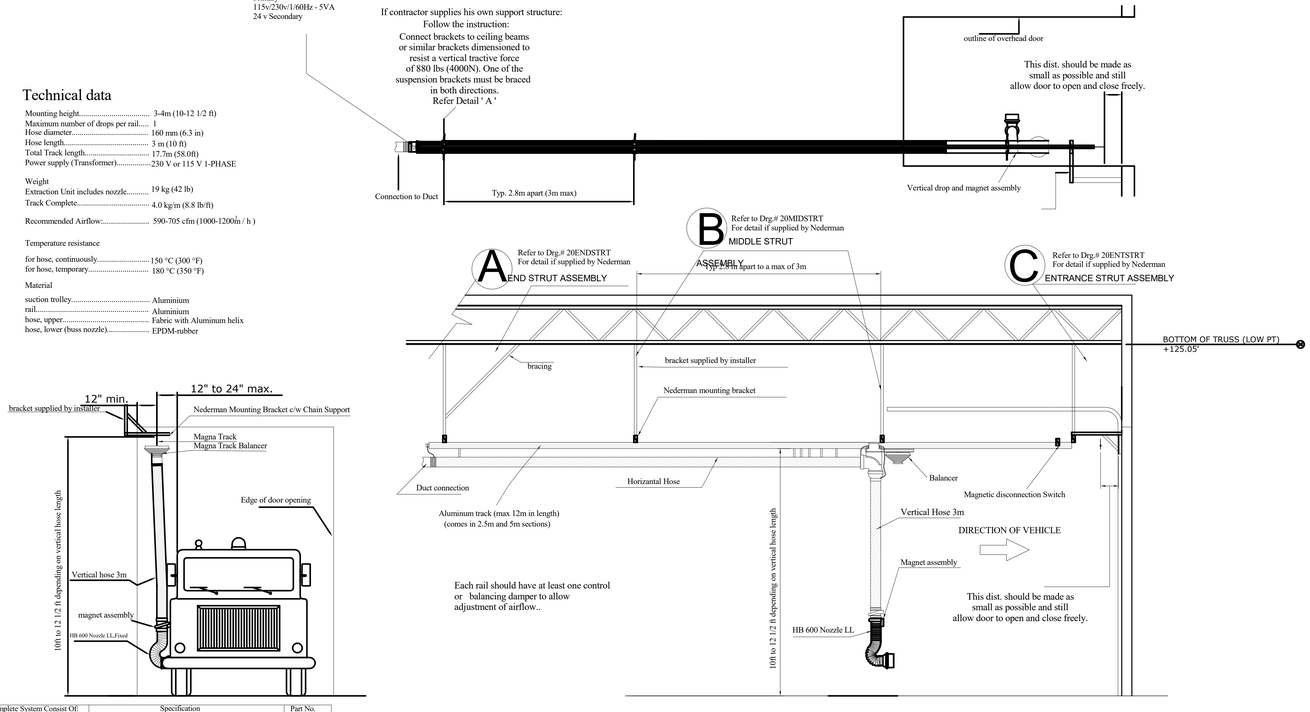

Complete System Consist Of:	Specification	Part No.
Magna Track HS:	Length = 17.7m / 58.0 ft	20804664
Magna Track HS Extraction Unit:	...xL=160mm/6.3"x1m/9.8'	20801764
Nozzle For Low Level Exhaust Pipe:	HB600LL Type , Fixed , ...xL=160mm/6.3"x600mm±100/23.6"±4	20802264
Entrance Strut Assembly:	Detail A:	20ENTSTRT
Middle Strut Assembly	Detail B:	20MIDSTRT
End Strut Assembly:	Detail C:	20ENDSTRT

B
M0.14

NEDERMAN MAGNA TRACT HS EXHAUST EXTRACTION SYSTEM SCHEMATIC

NTS

tsk
314 South Water Street,
Suite 100
Henderson, NV 89015
phone: 702.456.3000
fax: 702.898.6209
www.tska.com

THESE DRAWINGS AND SPECIFICATIONS ARE THE PROPERTY OF TATE SNYDER KIMSEY ARCHITECTS AND MAY NOT BE REPRODUCED OR USED FOR ANY PURPOSE WITHOUT THE ARCHITECTS WRITTEN CONSENT. AS INSTRUMENTS OF SERVICE, THESE DOCUMENTS ARE NOT FINAL AND READY FOR USE, AND THEREFORE NOT VALID, UNLESS THEY ARE SEALED, SIGNED AND DATED.

Consultant

IMEG
www.imegcorp.com
4599 LONGLEY LANE
RENO, NV 89502
P: 775.828.4899
PROJECT #22007707.00

IMEG CORP. RESERVES PROPRIETARY RIGHTS, INCLUDING COPYRIGHTS, TO THIS DRAWING AND THE DATA SHOWN THEREON. SAID DRAWING AND/OR DATA ARE THE EXCLUSIVE PROPERTY OF IMEG CORP. AND SHALL NOT BE USED OR REPRODUCED FOR ANY OTHER PROJECT WITHOUT THE EXPRESS WRITTEN APPROVAL AND PARTICIPATION OF IMEG CORP. ©2022 IMEG CORP.

0 1 2 3
REF. SCALE IN INCHES PROJECT #22007707.00

PLEASE RECYCLE

Project
SPARKS FIRE STATION #6

6963 WINGFIELD HILLS ROAD, SPARKS, NV 89436

Job No: 22-043

Owner
CITY OF SPARKS

PROFESSIONAL ENGINEER - STATE OF NEVADA
KATHY D. CALLENDER
EXP:12/31/2024
MECHANICAL
No. 026794
01/03/2024

BID SET

REVISIONS		
REV	DATE	DESCRIPTION

Sheet Title
APPARATUS BAY VEHICLE EXHAUST SCHEMATIC

Date: 01/04/2024
Sheet No:
M5.02

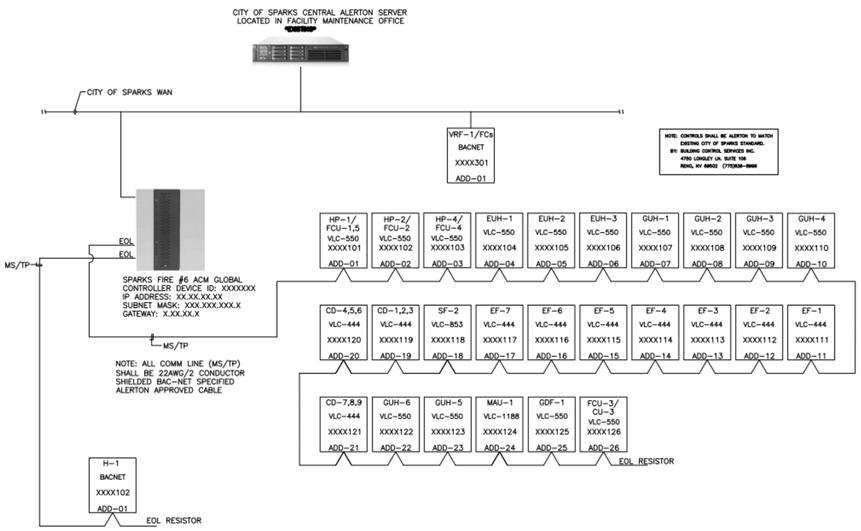

1 SYSTEM ARCHITECTURE
SCALE: NONE

ALERTON ACM GLOBAL CONTROLLER

QTY.	PART NUMBER	DESCRIPTION	MANUFACTURER
1	SCE-24N2008LP	24"X20"X8" ENCLOSURE	SCE
1	SCE-24N20MP	24"X20" STEEL BACKPLATE	SCE
1	PSH100AB10	100VA 24VAC POWER SUPPLY	FUNCTIONAL DEVICES
1	ACM	ASCENT GLOBAL CONTROL MODULE	ALERTON
1	ACM BATTERY	ASCENT GLOBAL CONTROL BATTERY	ALERTON

TCP LOCATED IN DATA ROOM

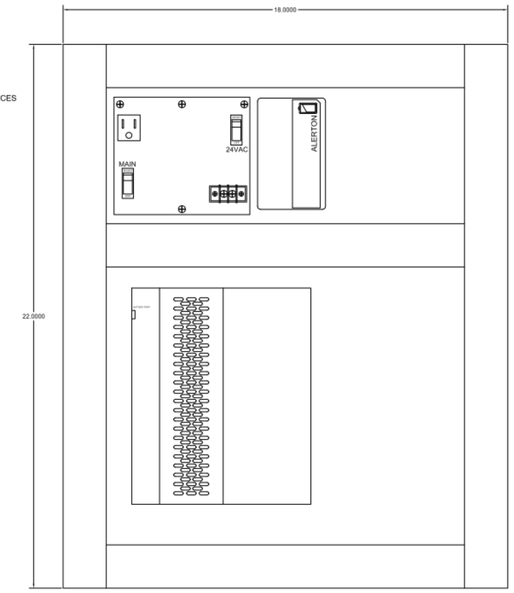

2 ACM TEMPERATURE CONTROL PANEL
SCALE: NONE

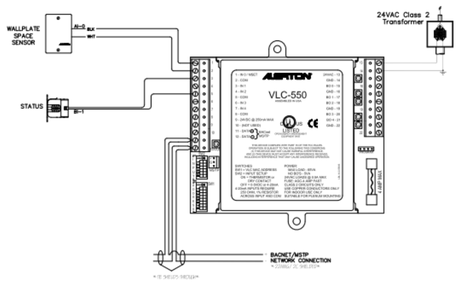

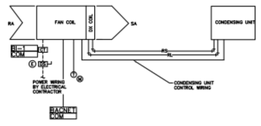

*NOTE: BCS TO INSTALL FACTORY PROVIDED THERMOSTATS FOR DUCTLESS HEAT PUMP UNITS

3 HEAT PUMP CONTROL DIAGRAM
SCALE: NONE

GENERAL:
THE ELECTRIC WALL HEATER SHALL BE PROVIDED WITH A SUPPLY FAN AND AN ELECTRIC HEATING ELEMENT.

THE TEMPERATURE SENSOR SHALL SIGNAL THE DDC CONTROLLER ITS TEMPERATURE AND THE TEMPERATURE OF THE HEATING SET POINT.

SEQUENCE OF OPERATION:
THE HEATER SHALL BE OPERATION SHALL BE ENABLED WHENEVER THE FOLLOWING CONDITION EXISTS:

1. THE SPACE TEMPERATURE DECREASES 1°F (ADJUSTABLE) BELOW THE SPACE TEMPERATURE HEATING SET POINT.

WHEN THE ABOVE CONDITION IS MET, THE DDC CONTROLLER SHALL SEQUENCE THE FOLLOWING:

1. SEND AN ENABLE COMMAND TO THE ELECTRIC WALL HEATER.

THE HEATING MODE OF OPERATION SHALL BE DISABLED WHENEVER THE FOLLOWING CONDITION EXISTS:

1. THE SPACE TEMPERATURE INCREASES 1°F (ADJUSTABLE) ABOVE THE SPACE TEMPERATURE HEATING SET POINT.

WHEN THE ABOVE CONDITION IS MET, THE DDC CONTROLLER SHALL SEQUENCE THE FOLLOWING:

1. SEND A DISABLE COMMAND TO THE ELECTRIC WALL HEATER.

THE SPACE TEMPERATURE HEATING SET POINTS SHALL BE SET AT 68°F (ADJUSTABLE).

ALARMS:
1. IF THE SPACE TEMPERATURE DECREASES TO 35°F (ADJUSTABLE) FOR A PERIOD OF 5 CONSECUTIVE MINUTES (ADJUSTABLE) AN ALARM OF THE EVENT SHALL BE SENT TO THE OPERATOR'S WORKSTATION.

ELECTRIC HEATER SEQUENCE OF OPERATION
(ALL ELECTRIC HEATERS)

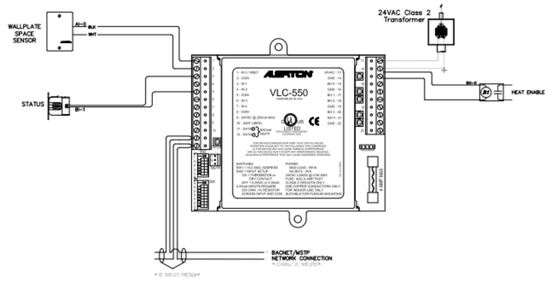

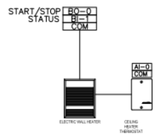

ELECTRIC HEATER CONTROL SYSTEM SCHEMATIC

4 EUH CONTROL DIAGRAM
SCALE: NONE

tsk
314 South Water Street,
Suite 100
Henderson, NV 89015
phone: 702.456.3000
fax: 702.898.6209
www.tska.com

THESE DRAWINGS AND SPECIFICATIONS ARE THE PROPERTY OF TATE SNYDER KIMSEY ARCHITECTS AND MAY NOT BE REPRODUCED OR USED FOR ANY PURPOSE WITHOUT THE ARCHITECTS WRITTEN CONSENT. AS INSTRUMENTS OF SERVICE, THESE DOCUMENTS ARE NOT FINAL AND READY FOR USE, AND THEREFORE NOT VALID, UNLESS THEY ARE SEALED, SIGNED AND DATED.

Consultant

IMEG
www.imegcorp.com
4599 LONGLEY LANE
RENO, NV 89502
P: 775.826.4599
PROJECT #22007707.00

IMEG CORP. RESERVES PROPRIETARY RIGHTS, INCLUDING COPYRIGHTS, TO THIS DRAWING AND THE DATA SHOWN THEREON. SAID DRAWING AND/OR DATA ARE THE EXCLUSIVE PROPERTY OF IMEG CORP. AND SHALL NOT BE USED OR REPRODUCED FOR ANY OTHER PROJECT WITHOUT THE EXPRESS WRITTEN APPROVAL AND PARTICIPATION OF IMEG CORP. ©2022 IMEG CORP.

0 1 2 3
REF. SCALE IN INCHES PROJECT #22007707.00

PLEASE RECYCLE

Project
SPARKS FIRE STATION #6

6963 WINGFIELD HILLS ROAD,
SPARKS, NV 89436

Job No: 22-043

Owner
CITY OF SPARKS

01/03/2024

BID SET

REVISIONS		
REV	DATE	DESCRIPTION

Sheet Title
CONTROL DIAGRAMS

Date: 01/04/2024
Sheet No:

M6.01

THE TEMPERATURE SENSOR SHALL SIGNAL THE DDC CONTROLLER ITS TEMPERATURE AND THE TEMPERATURE OF THE HEATING SET POINT.

CAUTION:DOOR OF OPERATION
THE HEATING MODE OF OPERATION SHALL BE ENABLED WHENEVER THE FOLLOWING CONDITION EXISTS:

1. THE SPACE TEMPERATURE DECREASES 1°F (ADJUSTABLE) BELOW THE SPACE TEMPERATURE HEATING SET POINT.

WHEN THE ABOVE CONDITION IS MET, THE DDC CONTROLLER SHALL SEQUENCE THE FOLLOWING:

1. SEND AN ENABLE COMMAND TO THE UNIT HEATER.
   a. THE UNIT HEATER SHALL CONTINUEOUSLY CYCLE AS REQUIRED TO MAINTAIN THE SPACE TEMPERATURE HEATING SET POINT.

THE HEATING MODE OF OPERATION SHALL BE DISABLED WHENEVER THE FOLLOWING CONDITION EXISTS:

1. THE SPACE TEMPERATURE INCREASES 1°F (ADJUSTABLE) ABOVE THE SPACE TEMPERATURE HEATING SET POINT.

WHEN THE ABOVE CONDITION IS MET, THE DDC CONTROLLER SHALL SEQUENCE THE FOLLOWING:

1. SEND A DISABLE COMMAND TO THE UNIT HEATER.
   1. IF THE SPACE TEMPERATURE FAILS TO DECREASE, AN ALARM OF THE EVENT SHALL BE SENT TO THE OPERATOR'S WORKSTATION.

THE SPACE TEMPERATURE HEATING SET POINTS SHALL BE SET AT 68°F (ADJUSTABLE).

CAUTION:
1. IF THE SPACE TEMPERATURE DECREASES TO 40°F (ADJUSTABLE) FOR A PERIOD OF 15 CONSECUTIVE MINUTES (ADJUSTABLE), AN ALARM OF THE EVENT SHALL BE SENT TO THE OPERATOR'S WORKSTATION.

GAS UNIT HEATER SEQUENCE OF OPERATION

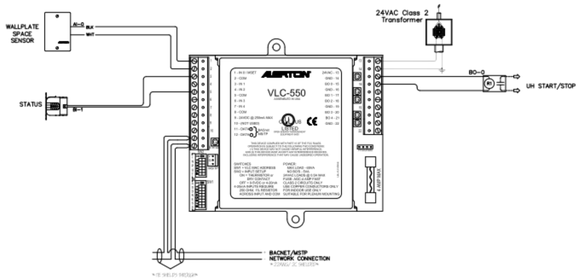

GAS UNIT HEATER CONTROL SYSTEM SCHEMATIC

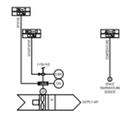

5 GUH CONTROL DIAGRAM
SCALE: NONE

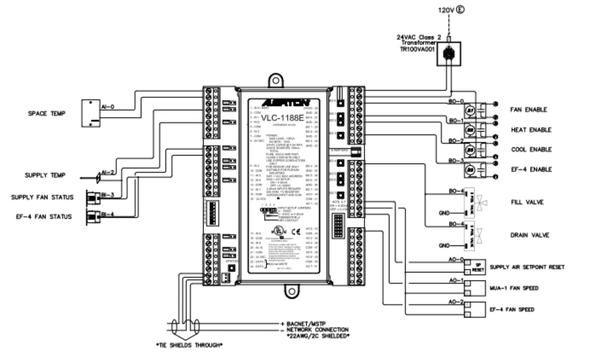

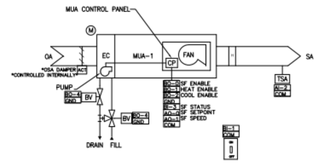

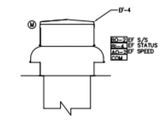

6 MAU CONTROL DIAGRAM
SCALE: NONE

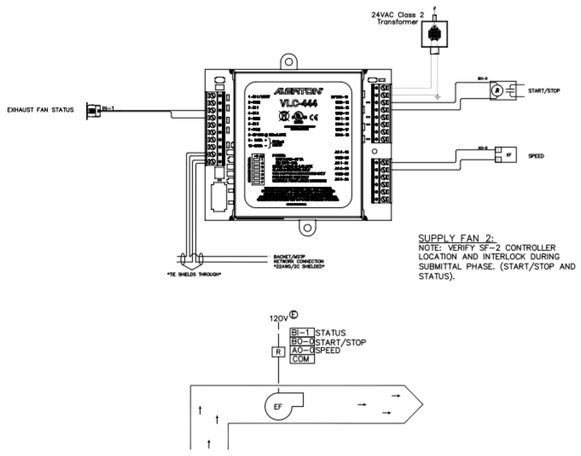

SUPPLY FAN 2:
NOTE: VERIFY SF-2 CONTROLLER LOCATION AND INTERLOCK DURING SUBMITTAL PHASE. (START/STOP AND STATUS).

7 GENERAL EF1,2,3,4,5,6,7 CONTROL DIAGRAM
SCALE: NONE

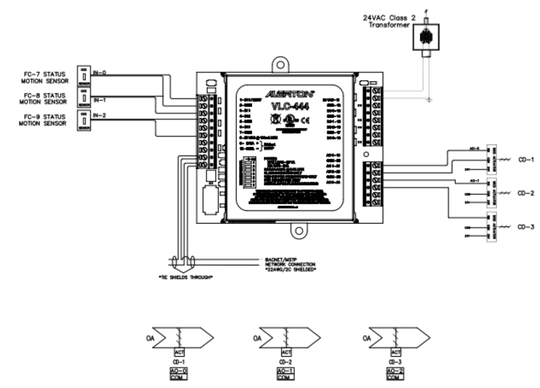

8 CREW QUARTERS DAMPER CONTROL DIAGRAM
SCALE: NONE

tsk

314 South Water Street,
Suite 100
Henderson, NV 89015
phone: 702.456.3000
fax: 702.898.6209
www.tska.com

THESE DRAWINGS AND SPECIFICATIONS ARE THE PROPERTY OF TATE SNYDER KIMSEY ARCHITECTS AND MAY NOT BE REPRODUCED OR USED FOR ANY PURPOSE WITHOUT THE ARCHITECTS WRITTEN CONSENT. AS INSTRUMENTS OF SERVICE, THESE DOCUMENTS ARE NOT FINAL AND READY FOR USE, AND THEREFORE NOT VALID, UNLESS THEY ARE SEALED, SIGNED AND DATED.

Consultant

IMEG
www.imegcorp.com
4599 LONGLEY LANE
RENO, NV 89502
P: 775.826.4899
PROJECT #22007707.00

IMEG CORP. RESERVES PROPRIETARY RIGHTS, INCLUDING COPYRIGHTS, TO THIS DRAWING AND THE DATA SHOWN THEREON. SAID DRAWING AND/OR DATA ARE THE EXCLUSIVE PROPERTY OF IMEG CORP. AND SHALL NOT BE USED OR REPRODUCED FOR ANY OTHER PROJECT WITHOUT THE EXPRESS WRITTEN APPROVAL AND PARTICIPATION OF IMEG CORP. ©2022 IMEG CORP.

0 1 2 3
REF. SCALE IN INCHES PROJECT #22007707.00

PLEASE RECYCLE

Project
SPARKS FIRE STATION #6

6963 WINGFIELD HILLS ROAD,
SPARKS, NV 89436

Job No: 22-043

Owner
CITY OF SPARKS

PROFESSIONAL ENGINEER - STATE OF NEVADA
KATHRYN CALLENDER
Exp:12/31/2024
MECHANICAL
No. 026794
01/03/2024

BID SET

REVISIONS		
REV	DATE	DESCRIPTION

Sheet Title
CONTROL DIAGRAMS

Date: 01/04/2024
Sheet No:
M6.02

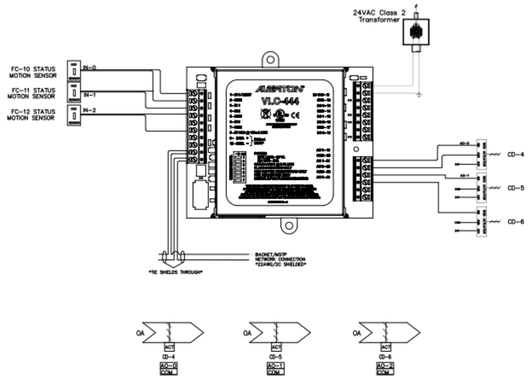

9 CREW QUARTERS DAMPER CONTROL DIAGRAM #2
SCALE: NONE

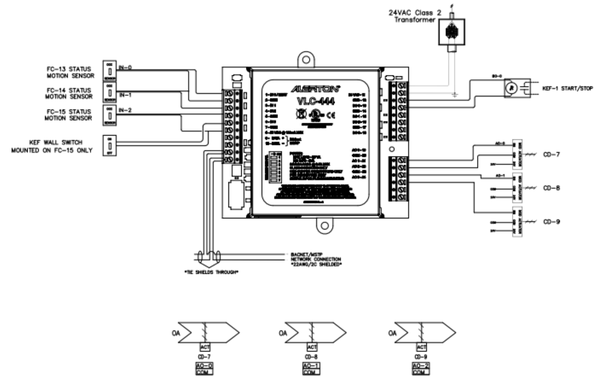

10 CREW QUARTERS DAMPER CONTROL DIAGRAM #3
SCALE: NONE

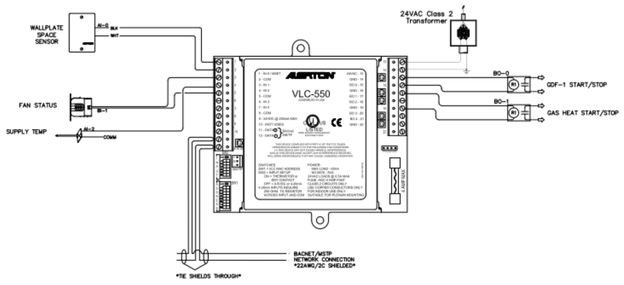

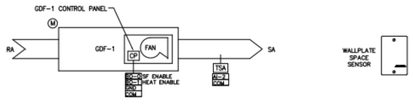

11 GDF-1 CONTROL DIAGRAM
SCALE: NONE

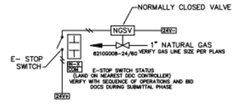

12 EMERGENCY ON CALL GAS VALVE SHUTDOWN
SCALE: NONE

tsk
314 South Water Street,
Suite 100
Henderson, NV 89015
phone: 702.456.3000
fax: 702.898.6209
www.tska.com

THESE DRAWINGS AND SPECIFICATIONS ARE THE PROPERTY OF TATE SNYDER KIMSEY ARCHITECTS AND MAY NOT BE REPRODUCED OR USED FOR ANY PURPOSE WITHOUT THE ARCHITECTS WRITTEN CONSENT. AS INSTRUMENTS OF SERVICE, THESE DOCUMENTS ARE NOT FINAL AND READY FOR USE, AND THEREFORE NOT VALID, UNLESS THEY ARE SEALED, SIGNED AND DATED.

Consultant

IMEG
www.imegcorp.com
4599 LONGLEY LANE
RENO, NV 89502
P: 775.828.4000
PROJECT #22007707.00

IMEG CORP. RESERVES PROPRIETARY RIGHTS, INCLUDING COPYRIGHTS, TO THIS DRAWING AND THE DATA SHOWN THEREON. SAID DRAWING AND/OR DATA ARE THE EXCLUSIVE PROPERTY OF IMEG CORP. AND SHALL NOT BE USED OR REPRODUCED FOR ANY OTHER PROJECT WITHOUT THE EXPRESS WRITTEN APPROVAL AND PARTICIPATION OF IMEG CORP. ©2022 IMEG CORP.

0 1 2 3
REF. SCALE IN INCHES PROJECT #22007707.00

PLEASE RECYCLE

Project
SPARKS FIRE STATION #6

6963 WINGFIELD HILLS ROAD,
SPARKS, NV 89436

Job No: 22-043

Owner
CITY OF SPARKS

PROFESSIONAL ENGINEER - STATE OF NEVADA
KATHRYN J. CALLENDER
Exp:12/31/2024
MECHANICAL
No. 026794
01/03/2024

BID SET

REVISIONS		
REV	DATE	DESCRIPTION

Sheet Title
CONTROL DIAGRAMS

Date: 01/04/2024
Sheet No:

M6.03

COM*check* Software Version 4.1.5.5

Inspection Checklist

Energy Code: 90.1 (2016) Standard

Requirements: 100.0% were addressed directly in the COM*check* software

Text in the "Comments/Assumptions" column is provided by the user in the COM*check* Requirements screen. For each requirement, the user certifies that a code requirement will be met and how that is documented, or that an exception is being claimed. Where compliance is itemized in a separate table, a reference to that table is provided.

Section # & Req.ID	Plan Review	Complies?	Comments/Assumptions
4.2.2, 6.4.4.2.1, 6.7.2 [PR2][1]	Plans, specifications, and/or calculations provide all information with which compliance can be determined for the mechanical systems and equipment and document where exceptions to the standard are claimed. Load calculations per acceptable engineering standards and handbooks.	☐Complies ☐Does Not ☐Not Observable ☐Not Applicable	Requirement will be met.
4.2.2, 7.7.1, 10.4.2 [PR3][1]	Plans, specifications, and/or calculations provide all information with which compliance can be determined for the service water heating systems and equipment and document where exceptions to the standard are claimed. Hot water system sized per manufacturer's sizing guide.	☐Complies ☐Does Not ☐Not Observable ☐Not Applicable	Requirement will be met.
4.2.2, 8.4.1.1, 8.4.1.2, 8.7 [PR6][2]	Plans, specifications, and/or calculations provide all information with which compliance can be determined for the electrical systems and equipment and document where exceptions are claimed. Feeder connectors sized in accordance with approved plans and branch circuits sized for maximum drop of 3%.	☐Complies ☐Does Not ☐Not Observable ☐Not Applicable	Requirement will be met.
6.7.2.4 [PR5][1]	Detailed instructions for HVAC systems commissioning included on the plans or specifications for projects >=50,000 ft2.	☐Complies ☐Does Not ☐Not Observable ☐Not Applicable	**Exception:** Requirement does not apply.

Additional Comments/Assumptions:

1	High Impact (Tier 1)	2	Medium Impact (Tier 2)	3	Low Impact (Tier 3)

Quantity System Type & Description

Cooling: 1 each - Split System, Capacity = 22 kBtu/h, Air-Cooled Condenser
Proposed Efficiency = 15.00 SEER, Required Efficiency: 13.00 SEER
Fan System: FCU-3 | DATA ROOM -- Compliance (Motor nameplate HP method) : Passes

Fans:
FCU3 Supply, Constant Volume, 915 CFM, 0.1 motor nameplate hp, 0.6 fan efficiency grade

1 FCU-4 (Single Zone):
Heating: 1 each - Duct Furnace, Gas, Capacity = 150 kBtu/h
Proposed Efficiency = 80.00% Ec, Required Efficiency: 80.00 % Ec
Cooling: 1 each - Split System, Capacity = 46 kBtu/h, Air-Cooled Condenser
Proposed Efficiency = 16.00 SEER, Required Efficiency: 13.00 SEER
Fan System: FCU-4 | TURNOUT GEAR AND RED ZONE LAUNDRY -- Compliance (Motor nameplate HP method) : Passes

Fans:
FCU4 Supply, Constant Volume, 1400 CFM, 0.6 motor nameplate hp, 0.6 fan efficiency grade
EF1 Exhaust, Constant Volume, 1400 CFM, 0.8 motor nameplate hp, 0.8 fan efficiency grade

1 WH-1:
Gas Storage Water Heater, Capacity: 100 gallons, Input Rating: 300 kBtu/h w/ Circulation Pump
Proposed Efficiency: 92.00 % Et, Required Efficiency: 80.00 % Et

1 WH-2:
Gas Storage Water Heater, Capacity: 60 gallons, Input Rating: 199 kBtu/h w/ Circulation Pump
Proposed Efficiency: 98.50 % Et, Required Efficiency: 80.00 % Et

Mechanical Compliance Statement

Compliance Statement: The proposed mechanical design represented in this document is consistent with the building plans, specifications, and other calculations submitted with this permit application. The proposed mechanical systems have been designed to meet the 90.1 (2016) Standard requirements in COM*check* Version 4.1.5.5 and to comply with any applicable mandatory requirements listed in the Inspection Checklist.

William Nelson, Sr Mech Des — Name - Title
Signature
04-10-2023 — Date

Quantity System Type & Description

Fans:
FC4 Supply, Constant Volume, 2541 CFM, 2.9 motor nameplate hp, 0.6 fan efficiency grade
EF5 Exhaust, Constant Volume, 1693 CFM, 0.5 motor nameplate hp, 0.8 fan efficiency grade

1 FC-5 (Single Zone):
Cooling: 1 each - VRF Zone Fan Unit, Capacity = 11 kBtu/h
No minimum efficiency requirement applies
Fan System: FC-5 | ZONE 5 -- Compliance (Motor nameplate HP method) : Passes

Fans:
FC5 Supply, Constant Volume, 530 CFM, 0.4 motor nameplate hp, 0.6 fan efficiency grade
EF7 Exhaust, Constant Volume, 166 CFM, 0.2 motor nameplate hp, 0.6 fan efficiency grade

1 FC-6 (Single Zone):
Cooling: 1 each - VRF Zone Fan Unit, Capacity = 11 kBtu/h
No minimum efficiency requirement applies
Fan System: FC-6 | ZONE 6 -- Compliance (Motor nameplate HP method) : Passes

Fans:
FC6 Supply, Constant Volume, 530 CFM, 0.4 motor nameplate hp, 0.6 fan efficiency grade

9 FC-7 THRU 15 (Single Zone):
Cooling: 9 each - VRF Zone Fan Unit, Capacity = 5 kBtu/h
No minimum efficiency requirement applies
Fan System: FC-7 THRU 15 | ZONE 7 THRU 15 -- Compliance (Motor nameplate HP method) : Passes

Fans:
FC7_15 Supply, Constant Volume, 300 CFM, 0.1 motor nameplate hp, 0.6 fan efficiency grade
CEF1_11 Exhaust, Constant Volume, 50 CFM, 0.0 motor nameplate hp, 0.6 fan efficiency grade

1 HP-1 (Single Zone):
VRF Condensing Unit, Air Cooled Heat Pump
Heating Mode: Capacity = 37 kBtu/h,
Proposed Efficiency = 10.15 HSPF, Required Efficiency = 7.70 HSPF
Cooling Mode: Capacity = 34 kBtu/h,
Proposed Efficiency = 19.30 SEER, Required Efficiency: 13.00 SEER
Fan System: None

1 FCU-1 (Single Zone):
Cooling: 1 each - VRF Zone Fan Unit, Capacity Unknown
No minimum efficiency requirement applies
Fan System: FCU-1 | TOOL SHOP -- Compliance (Motor nameplate HP method) : Passes

Fans:
FCU1 Supply, Constant Volume, 281 CFM, 0.2 motor nameplate hp, 0.6 fan efficiency grade
EF3 Exhaust, Constant Volume, 905 CFM, 0.3 motor nameplate hp, 0.8 fan efficiency grade

1 FCU-5 (Single Zone):
Cooling: 1 each - VRF Zone Fan Unit, Capacity Unknown
No minimum efficiency requirement applies
Fan System: FCU-5 | ELEC ROOM -- Compliance (Motor nameplate HP method) : Passes

Fans:
FCU5 Supply, Constant Volume, 643 CFM, 0.2 motor nameplate hp, 0.6 fan efficiency grade

1 HP-2 (Single Zone):
Cooling: 1 each - Split System, Capacity = 9 kBtu/h, Air-Cooled Condenser
Proposed Efficiency = 18.00 SEER, Required Efficiency: 13.00 SEER
Fan System: FCU-2 | EMS ROOM -- Compliance (Motor nameplate HP method) : Passes

Fans:
FCU2 Supply, Constant Volume, 392 CFM, 0.2 motor nameplate hp, 0.6 fan efficiency grade
EF6 Exhaust, Constant Volume, 156 CFM, 0.2 motor nameplate hp, 0.8 fan efficiency grade

1 HP-3 (Single Zone):

COM*check* Software Version 4.1.5.5

Mechanical Compliance Certificate

Project Information

Energy Code:	90.1 (2016) Standard
Project Title:	Sparks Fire Station #6
Location:	Sparks, Nevada
Climate Zone:	5b
Project Type:	New Construction

Construction Site:
Wingfield Hills Road
Sparks, NV 89436

Owner/Agent:
Kolby Harpstead
TSK Architects
225 South Arlington Ave
Suite A
Reno, NV 89501
775-857-2949
kolby.harpstead@tska.com

Designer/Contractor:
William Nelson
Imeg Corporation
4599 Longley Lane
Reno, NV 89502
775-374-5691
lsemenko@qdconstruction.com

Mechanical Systems List

Quantity System Type & Description

1 VRF-1 (Single Zone):
VRF Condensing Unit, Air Cooled w/ Heat Recovery Heat Pump
Heating Mode: Capacity = 216 kBtu/h,
Proposed Efficiency = 3.50 COP, Required Efficiency = 3.20 COP
Cooling Mode: Capacity = 192 kBtu/h,
Proposed Efficiency = 11.50 EER, Required Efficiency: 10.40 EER + 13.7 IEER
Fan System: None

1 FC-1 (Single Zone):
Cooling: 1 each - VRF Zone Fan Unit, Capacity = 10 kBtu/h
No minimum efficiency requirement applies
Fan System: FC-1 | ZONE 1 -- Compliance (Motor nameplate HP method) : Passes

Fans:
FC1 Supply, Constant Volume, 335 CFM, 0.2 motor nameplate hp, 0.6 fan efficiency grade

1 FC-2 (Single Zone):
Cooling: 1 each - VRF Zone Fan Unit, Capacity = 57 kBtu/h, No Economizer, Economizer exception: High Efficiency Equipment
No minimum efficiency requirement applies
Fan System: FC-2 | ZONE 2 -- Compliance (Motor nameplate HP method) : Passes

Fans:
FC2 Supply, Constant Volume, 2047 CFM, 2.6 motor nameplate hp, 0.6 fan efficiency grade
KEF1 Exhaust, Constant Volume, 1500 CFM, 0.8 motor nameplate hp, 0.8 fan efficiency grade

1 FC-3 (Single Zone):
Cooling: 1 each - VRF Zone Fan Unit, Capacity = 6 kBtu/h
No minimum efficiency requirement applies
Fan System: FC-3 | ZONE 3 -- Compliance (Motor nameplate HP method) : Passes

Fans:
FC3 Supply, Constant Volume, 300 CFM, 0.1 motor nameplate hp, 0.6 fan efficiency grade
KEF1 Exhaust, Constant Volume, 1500 CFM, 0.8 motor nameplate hp, 0.8 fan efficiency grade

1 FC-4 (Single Zone):
Cooling: 1 each - VRF Zone Fan Unit, Capacity = 71 kBtu/h, No Economizer, Economizer exception: High Efficiency Equipment
No minimum efficiency requirement applies
Fan System: FC-4 | ZONE 4 -- Compliance (Motor nameplate HP method) : Passes

Section # & Req.ID	Mechanical Rough-In Inspection	Plans Verified Value	Field Verified Value	Complies?	Comments/Assumptions
6.4.4.1.4 [ME41][1]	Thermally ineffective panel surfaces of sensible heating panels have insulation >= R-3.5.			☐Complies ☐Does Not ☐Not Observable ☐Not Applicable	**Exception:** Requirement does not apply.
6.4.4.2.1 [ME10][2]	Ducts and plenums having pressure class ratings are Seal Class A construction.			☐Complies ☐Does Not ☐Not Observable ☐Not Applicable	**Exception:** Requirement does not apply.
6.8.1-15, 6.8.1-16 [ME110][2]	Electrically operated DX-DOAS units meet requirements per Tables 6.8.1-15 or 6.8.1-16.			☐Complies ☐Does Not ☐Not Observable ☐Not Applicable	**Exception:** Requirement does not apply.
6.4.4.2.2 [ME11][1]	Ductwork operating >3 in. water column requires air leakage testing.			☐Complies ☐Does Not ☐Not Observable ☐Not Applicable	**Exception:** Requirement does not apply.
6.4.4.2.2 [ME11][1]	Ductwork operating >3 in. water column requires air leakage testing.			☐Complies ☐Does Not ☐Not Observable ☐Not Applicable	**Exception:** Requirement does not apply.
6.4.4.2.2 [ME11][1]	Ductwork operating >3 in. water column requires air leakage testing.			☐Complies ☐Does Not ☐Not Observable ☐Not Applicable	**Exception:** Requirement does not apply.
6.4.4.2.2 [ME11][1]	Ductwork operating >3 in. water column requires air leakage testing.			☐Complies ☐Does Not ☐Not Observable ☐Not Applicable	**Exception:** Requirement does not apply.
6.4.4.2.2 [ME11][1]	Ductwork operating >3 in. water column requires air leakage testing.			☐Complies ☐Does Not ☐Not Observable ☐Not Applicable	**Exception:** Requirement does not apply.
6.4.4.2.2 [ME11][1]	Ductwork operating >3 in. water column requires air leakage testing.			☐Complies ☐Does Not ☐Not Observable ☐Not Applicable	**Exception:** Requirement does not apply.
6.4.4.2.2 [ME11][1]	Ductwork operating >3 in. water column requires air leakage testing.			☐Complies ☐Does Not ☐Not Observable ☐Not Applicable	**Exception:** Requirement does not apply.
6.4.4.2.2 [ME11][1]	Ductwork operating >3 in. water column requires air leakage testing.			☐Complies ☐Does Not ☐Not Observable ☐Not Applicable	**Exception:** Requirement does not apply.
6.4.4.2.2 [ME11][1]	Ductwork operating >3 in. water column requires air leakage testing.			☐Complies ☐Does Not ☐Not Observable ☐Not Applicable	**Exception:** Requirement does not apply.
6.4.4.2.2 [ME11][1]	Ductwork operating >3 in. water column requires air leakage testing.			☐Complies ☐Does Not ☐Not Observable ☐Not Applicable	**Exception:** Requirement does not apply.

1	High Impact (Tier 1)	2	Medium Impact (Tier 2)	3	Low Impact (Tier 3)

Section # & Req.ID	Mechanical Rough-In Inspection	Plans Verified Value	Field Verified Value	Complies?	Comments/Assumptions
6.4.1.4, 6.4.1.5 [ME1][1]	HVAC equipment efficiency verified. Non-NAECA HVAC equipment labeled as meeting 90.1.	Efficiency:____	Efficiency:____	☐Complies ☐Does Not ☐Not Observable ☐Not Applicable	*See the Mechanical Systems list for values.*
6.4.3.4.1 [ME3][1]	Stair and elevator shaft vents have motorized dampers that automatically close.			☐Complies ☐Does Not ☐Not Observable ☐Not Applicable	**Exception:** Requirement does not apply.
6.4.3.4.2, 6.4.3.4.3 [ME4][1]	Outdoor air and exhaust systems have motorized dampers that automatically shut when not in use and meet maximum leakage rates. Check gravity dampers where allowed.			☐Complies ☐Does Not ☐Not Observable ☐Not Applicable	**Exception:** Gravity dampers acceptable in systems with outside or exhaust air flow rates less than 300 cfm where dampers are interlocked with fan.
6.4.3.4.5 [ME39][1]	Enclosed parking garage ventilation has automatic contaminant detection and capacity to stage or modulate fans to 50% or less of design capacity.			☐Complies ☐Does Not ☐Not Observable ☐Not Applicable	**Exception:** Requirement does not apply.
6.4.3.4.4 [ME5][1]	Ventilation fans >0.75 hp have automatic controls to shut off fan when not required.			☐Complies ☐Does Not ☐Not Observable ☐Not Applicable	**Exception:** HVAC systems intended to operate continuously.
6.4.3.8 [ME6][1]	Demand control ventilation provided for spaces >500 ft2 and >25 people/1000 ft2 occupant density and served by systems with air side economizer, auto modulating outside air damper control, or design airflow >3,000 cfm.			☐Complies ☐Does Not ☐Not Observable ☐Not Applicable	**Exception:** Systems with heat recovery.
6.5.3.2.1 [ME40][2]	DX cooling systems >= 75 kBtu/h (>= 65 kBtu/h effective 1/2016) and chilled-water and evaporative cooling fan motor hp >= ¼ designed to vary supply fan airflow as a function of load and comply with operational requirements.			☐Complies ☐Does Not ☐Not Observable ☐Not Applicable	Requirement will be met. *See the Mechanical Systems list for values.*
6.4.4.1.1 [ME7][1]	Insulation exposed to weather protected from damage. Insulation outside of the conditioned space and associated with cooling systems is vapor retardant.			☐Complies ☐Does Not ☐Not Observable ☐Not Applicable	Requirement will be met.
6.4.4.1.2 [ME8][1]	HVAC ducts and plenums insulated per Table 6.8.2. Where ducts or plenums are installed in or under a slab, verification may need to occur during Foundation Inspection.	R-____	R-____	☐Complies ☐Does Not ☐Not Observable ☐Not Applicable	Requirement will be met.
6.4.4.1.3 [ME9][2]	HVAC piping insulation thickness. Where piping is installed in or under a slab, verification may need to occur during Foundation Inspection.	____ in.	____ in.	☐Complies ☐Does Not ☐Not Observable ☐Not Applicable	Requirement will be met.

1	High Impact (Tier 1)	2	Medium Impact (Tier 2)	3	Low Impact (Tier 3)

Section # & Req.ID	Plumbing Rough-In Inspection	Complies?	Comments/Assumptions
7.4.4.1 [PL2][1]	Temperature controls installed on service water heating systems (<=120ºF to maximum temperature for intended use).	☐Complies ☐Does Not ☐Not Observable ☐Not Applicable	Requirement will be met.
7.4.4.1 [PL2][1]	Temperature controls installed on service water heating systems (<=120ºF to maximum temperature for intended use).	☐Complies ☐Does Not ☐Not Observable ☐Not Applicable	Requirement will be met.
7.4.4.2 [PL3][1]	Automatic time switches installed to automatically switch off the recirculating hot-water system or heat trace.	☐Complies ☐Does Not ☐Not Observable ☐Not Applicable	Requirement will be met.
7.4.4.2 [PL3][1]	Automatic time switches installed to automatically switch off the recirculating hot-water system or heat trace.	☐Complies ☐Does Not ☐Not Observable ☐Not Applicable	Requirement will be met.

Additional Comments/Assumptions:

1	High Impact (Tier 1)	2	Medium Impact (Tier 2)	3	Low Impact (Tier 3)

Section # & Req.ID	Footing / Foundation Inspection	Complies?	Comments/Assumptions
6.4.3.7 [FO9][1]	Freeze protection and snow/ice melting system sensors for future connection to controls.	☐Complies ☐Does Not ☐Not Observable ☐Not Applicable	**Exception:** Requirement does not apply.

Additional Comments/Assumptions:

1	High Impact (Tier 1)	2	Medium Impact (Tier 2)	3	Low Impact (Tier 3)

tsk
314 South Water Street,
Suite 100
Henderson, NV 89015
phone: 702.456.3000
fax: 702.898.6209
www.tska.com

THESE DRAWINGS AND SPECIFICATIONS ARE THE PROPERTY OF TATE SNYDER KIMSEY ARCHITECTS AND MAY NOT BE REPRODUCED OR USED FOR ANY PURPOSE WITHOUT THE ARCHITECTS WRITTEN CONSENT. AS INSTRUMENTS OF SERVICE, THESE DOCUMENTS ARE NOT FINAL AND READY FOR USE, AND THEREFORE NOT VALID, UNLESS THEY ARE SEALED, SIGNED AND DATED.

Consultant

IMEG
4599 LONGLEY LANE
RENO, NV 89502
P: 775.828.4899
PROJECT #22007707.00
www.imegcorp.com

IMEG CORP. RESERVES PROPRIETARY RIGHTS, INCLUDING COPYRIGHTS, TO THIS DRAWING AND THE DATA SHOWN THEREON. SAID DRAWING AND/OR DATA ARE THE EXCLUSIVE PROPERTY OF IMEG CORP. AND SHALL NOT BE USED OR REPRODUCED FOR ANY OTHER PROJECT WITHOUT THE EXPRESS WRITTEN APPROVAL AND PARTICIPATION OF IMEG CORP. ©2022 IMEG CORP.

0 1 2 3
REF. SCALE IN INCHES PROJECT #22007707.00

PLEASE RECYCLE

Project
SPARKS FIRE STATION #6

6963 WINGFIELD HILLS ROAD, SPARKS, NV 89436

Job No: 22-043

Owner
CITY OF SPARKS

CITY OF SPARKS FIRE DEPARTMENT Est. 1905

PROFESSIONAL ENGINEER-STATE OF NEVADA
KATHRYN J. CALLENDER
EXP:12/31/2024
MECHANICAL
No. 026794

01/03/2024

BID SET

REVISIONS		
REV	DATE	DESCRIPTION

Sheet Title
MECHANICAL IECC

Date: 01/04/2024
Sheet No:

M8.01

Section # & Req.ID	Mechanical Rough-In Inspection	Plans Verified Value	Field Verified Value	Complies?	Comments/Assumptions
6.4.4.2.2 [ME11][2]	Ductwork operating >3 in. water column requires air leakage testing.			☐Complies ☐Does Not ☐Not Observable ☐Not Applicable	**Exception:** Requirement does not apply.
6.4.4.2.2 [ME11][2]	Ductwork operating >3 in. water column requires air leakage testing.			☐Complies ☐Does Not ☐Not Observable ☐Not Applicable	**Exception:** Requirement does not apply.
6.4.4.2.2 [ME11][2]	Ductwork operating >3 in. water column requires air leakage testing.			☐Complies ☐Does Not ☐Not Observable ☐Not Applicable	**Exception:** Requirement does not apply.
6.4.4.2.2 [ME11][2]	Ductwork operating >3 in. water column requires air leakage testing.			☐Complies ☐Does Not ☐Not Observable ☐Not Applicable	**Exception:** Requirement does not apply.
6.5.2.3 [ME19][2]	Dehumidification controls provided to prevent reheating, recooling, mixing of hot and cold airstreams or concurrent heating and cooling of the same airstream.			☐Complies ☐Does Not ☐Not Observable ☐Not Applicable	Requirement will be met.
6.5.2.4.1 [ME68][2]	Humidifiers with airstream mounted preheating jackets have preheat auto-shutoff value set to activate when humidification is not required.			☐Complies ☐Does Not ☐Not Observable ☐Not Applicable	**Exception:** Requirement does not apply.
6.5.2.4.2 [ME69][2]	Humidification system dispersion tube hot surfaces in the airstreams of ducts or air-handling units insulated >= R-0.5.			☐Complies ☐Does Not ☐Not Observable ☐Not Applicable	**Exception:** Requirement does not apply.
6.5.2.5 [ME70][2]	Preheat coils controlled to stop heat output whenever mechanical cooling, including economizer operation, is active.			☐Complies ☐Does Not ☐Not Observable ☐Not Applicable	Requirement will be met.
6.5.2.6 [ME106][1]	Units that provide ventilation air to multiple zones and operate in conjunction with zone heating and cooling systems are prevented from using heating or heat recovery to warm supply air above 60°F when representative building loads or outdoor air temperature indicate that most zones demand cooling.			☐Complies ☐Does Not ☐Not Observable ☐Not Applicable	Requirement will be met.
6.5.3.6 [ME72][2]	Motors for fans >= 1/12 hp and < 1 hp are electronically-commutated motors or have a minimum motor efficiency of 70%. These motors are also speed adjustable for either balancing or remote control.			☐Complies ☐Does Not ☐Not Observable ☐Not Applicable	Requirement will be met.

1 High Impact (Tier 1) | 2 Medium Impact (Tier 2) | 3 Low Impact (Tier 3)

Section # & Req.ID	Mechanical Rough-In Inspection	Plans Verified Value	Field Verified Value	Complies?	Comments/Assumptions
6.5.3.6 [ME72][2]	Motors for fans >= 1/12 hp and < 1 hp are electronically-commutated motors or have a minimum motor efficiency of 70%. These motors are also speed adjustable for either balancing or remote control.			☐Complies ☐Does Not ☐Not Observable ☐Not Applicable	Requirement will be met.
6.5.3.6 [ME72][2]	Motors for fans >= 1/12 hp and < 1 hp are electronically-commutated motors or have a minimum motor efficiency of 70%. These motors are also speed adjustable for either balancing or remote control.			☐Complies ☐Does Not ☐Not Observable ☐Not Applicable	Requirement will be met.
6.5.3.6 [ME72][2]	Motors for fans >= 1/12 hp and < 1 hp are electronically-commutated motors or have a minimum motor efficiency of 70%. These motors are also speed adjustable for either balancing or remote control.			☐Complies ☐Does Not ☐Not Observable ☐Not Applicable	Requirement will be met.
6.5.3.6 [ME72][2]	Motors for fans >= 1/12 hp and < 1 hp are electronically-commutated motors or have a minimum motor efficiency of 70%. These motors are also speed adjustable for either balancing or remote control.			☐Complies ☐Does Not ☐Not Observable ☐Not Applicable	Requirement will be met.
6.5.3.6 [ME72][2]	Motors for fans >= 1/12 hp and < 1 hp are electronically-commutated motors or have a minimum motor efficiency of 70%. These motors are also speed adjustable for either balancing or remote control.			☐Complies ☐Does Not ☐Not Observable ☐Not Applicable	Requirement will be met.
6.5.3.6 [ME72][2]	Motors for fans >= 1/12 hp and < 1 hp are electronically-commutated motors or have a minimum motor efficiency of 70%. These motors are also speed adjustable for either balancing or remote control.			☐Complies ☐Does Not ☐Not Observable ☐Not Applicable	Requirement will be met.
6.5.3.6 [ME72][2]	Motors for fans >= 1/12 hp and < 1 hp are electronically-commutated motors or have a minimum motor efficiency of 70%. These motors are also speed adjustable for either balancing or remote control.			☐Complies ☐Does Not ☐Not Observable ☐Not Applicable	Requirement will be met.
6.5.3.6 [ME72][2]	Motors for fans >= 1/12 hp and < 1 hp are electronically-commutated motors or have a minimum motor efficiency of 70%. These motors are also speed adjustable for either balancing or remote control.			☐Complies ☐Does Not ☐Not Observable ☐Not Applicable	Requirement will be met.

1 High Impact (Tier 1) | 2 Medium Impact (Tier 2) | 3 Low Impact (Tier 3)

Section # & Req.ID	Mechanical Rough-In Inspection	Plans Verified Value	Field Verified Value	Complies?	Comments/Assumptions
6.5.3.6 [ME72][2]	Motors for fans >= 1/12 hp and < 1 hp are electronically-commutated motors or have a minimum motor efficiency of 70%. These motors are also speed adjustable for either balancing or remote control.			☐Complies ☐Does Not ☐Not Observable ☐Not Applicable	Requirement will be met.
6.5.3.6 [ME72][2]	Motors for fans >= 1/12 hp and < 1 hp are electronically-commutated motors or have a minimum motor efficiency of 70%. These motors are also speed adjustable for either balancing or remote control.			☐Complies ☐Does Not ☐Not Observable ☐Not Applicable	Requirement will be met.
6.5.3.4 [ME108][2]	Parallel-flow fan-powered VAV air terminals have automatic controls to a) turn off the terminal fan except when space heating is required or if required for ventilation; b) turn on the terminal fan as the first stage of heating before the heating coil is activated; and c) during heating for warmup or setback temperature control, either operate the terminal fan and heating coil without primary air or reverse the terminal damper logic and provide heating from the central air handler through primary air.			☐Complies ☐Does Not ☐Not Observable ☐Not Applicable	**Exception:** Requirement does not apply.
6.5.3.4 [ME108][2]	Parallel-flow fan-powered VAV air terminals have automatic controls to a) turn off the terminal fan except when space heating is required or if required for ventilation; b) turn on the terminal fan as the first stage of heating before the heating coil is activated; and c) during heating for warmup or setback temperature control, either operate the terminal fan and heating coil without primary air or reverse the terminal damper logic and provide heating from the central air handler through primary air.			☐Complies ☐Does Not ☐Not Observable ☐Not Applicable	**Exception:** Requirement does not apply.
6.5.3.4 [ME108][2]	Parallel-flow fan-powered VAV air terminals have automatic controls to a) turn off the terminal fan except when space heating is required or if required for ventilation; b) turn on the terminal fan as the first stage of heating before the heating coil is activated; and c) during heating for warmup or setback temperature control, either operate the terminal fan and heating coil without primary air or reverse the terminal damper logic and provide heating from the central air handler through primary air.			☐Complies ☐Does Not ☐Not Observable ☐Not Applicable	**Exception:** Requirement does not apply.
6.5.3.4 [ME108][2]	Parallel-flow fan-powered VAV air terminals have automatic controls to a) turn off the terminal fan except when space heating is required or if required for ventilation; b) turn on the terminal fan as the first stage of heating before the heating coil is activated; and c) during heating for warmup or setback temperature control, either operate the terminal fan and heating coil without primary air or reverse the terminal damper logic and provide heating from the central air handler through primary air.			☐Complies ☐Does Not ☐Not Observable ☐Not Applicable	**Exception:** Requirement does not apply.

1 High Impact (Tier 1) | 2 Medium Impact (Tier 2) | 3 Low Impact (Tier 3)

Section # & Req.ID	Mechanical Rough-In Inspection	Plans Verified Value	Field Verified Value	Complies?	Comments/Assumptions
6.5.3.4 [ME108][2]	Parallel-flow fan-powered VAV air terminals have automatic controls to a) turn off the terminal fan except when space heating is required or if required for ventilation; b) turn on the terminal fan as the first stage of heating before the heating coil is activated; and c) during heating for warmup or setback temperature control, either operate the terminal fan and heating coil without primary air or reverse the terminal damper logic and provide heating from the central air handler through primary air.			☐Complies ☐Does Not ☐Not Observable ☐Not Applicable	**Exception:** Requirement does not apply.
6.5.3.4 [ME108][2]	Parallel-flow fan-powered VAV air terminals have automatic controls to a) turn off the terminal fan except when space heating is required or if required for ventilation; b) turn on the terminal fan as the first stage of heating before the heating coil is activated; and c) during heating for warmup or setback temperature control, either operate the terminal fan and heating coil without primary air or reverse the terminal damper logic and provide heating from the central air handler through primary air.			☐Complies ☐Does Not ☐Not Observable ☐Not Applicable	**Exception:** Requirement does not apply.
6.5.3.4 [ME108][2]	Parallel-flow fan-powered VAV air terminals have automatic controls to a) turn off the terminal fan except when space heating is required or if required for ventilation; b) turn on the terminal fan as the first stage of heating before the heating coil is activated; and c) during heating for warmup or setback temperature control, either operate the terminal fan and heating coil without primary air or reverse the terminal damper logic and provide heating from the central air handler through primary air.			☐Complies ☐Does Not ☐Not Observable ☐Not Applicable	**Exception:** Requirement does not apply.
6.5.3.4 [ME108][2]	Parallel-flow fan-powered VAV air terminals have automatic controls to a) turn off the terminal fan except when space heating is required or if required for ventilation; b) turn on the terminal fan as the first stage of heating before the heating coil is activated; and c) during heating for warmup or setback temperature control, either operate the terminal fan and heating coil without primary air or reverse the terminal damper logic and provide heating from the central air handler through primary air.			☐Complies ☐Does Not ☐Not Observable ☐Not Applicable	**Exception:** Requirement does not apply.

1 High Impact (Tier 1) | 2 Medium Impact (Tier 2) | 3 Low Impact (Tier 3)

Section # & Req.ID	Mechanical Rough-In Inspection	Plans Verified Value	Field Verified Value	Complies?	Comments/Assumptions
6.5.3.4 [ME108][2]	Parallel-flow fan-powered VAV air terminals have automatic controls to a) turn off the terminal fan except when space heating is required or if required for ventilation; b) turn on the terminal fan as the first stage of heating before the heating coil is activated; and c) during heating for warmup or setback temperature control, either operate the terminal fan and heating coil without primary air or reverse the terminal damper logic and provide heating from the central air handler through primary air.			☐Complies ☐Does Not ☐Not Observable ☐Not Applicable	**Exception:** Requirement does not apply.
6.5.3.4 [ME108][2]	Parallel-flow fan-powered VAV air terminals have automatic controls to a) turn off the terminal fan except when space heating is required or if required for ventilation; b) turn on the terminal fan as the first stage of heating before the heating coil is activated; and c) during heating for warmup or setback temperature control, either operate the terminal fan and heating coil without primary air or reverse the terminal damper logic and provide heating from the central air handler through primary air.			☐Complies ☐Does Not ☐Not Observable ☐Not Applicable	**Exception:** Requirement does not apply.
6.5.3.4 [ME108][2]	Parallel-flow fan-powered VAV air terminals have automatic controls to a) turn off the terminal fan except when space heating is required or if required for ventilation; b) turn on the terminal fan as the first stage of heating before the heating coil is activated; and c) during heating for warmup or setback temperature control, either operate the terminal fan and heating coil without primary air or reverse the terminal damper logic and provide heating from the central air handler through primary air.			☐Complies ☐Does Not ☐Not Observable ☐Not Applicable	**Exception:** Requirement does not apply.
6.5.3.4 [ME108][2]	Parallel-flow fan-powered VAV air terminals have automatic controls to a) turn off the terminal fan except when space heating is required or if required for ventilation; b) turn on the terminal fan as the first stage of heating before the heating coil is activated; and c) during heating for warmup or setback temperature control, either operate the terminal fan and heating coil without primary air or reverse the terminal damper logic and provide heating from the central air handler through primary air.			☐Complies ☐Does Not ☐Not Observable ☐Not Applicable	**Exception:** Requirement does not apply.

1 High Impact (Tier 1) | 2 Medium Impact (Tier 2) | 3 Low Impact (Tier 3)

Section # & Req.ID	Mechanical Rough-In Inspection	Plans Verified Value	Field Verified Value	Complies?	Comments/Assumptions
6.5.3.4 [ME108][2]	Parallel-flow fan-powered VAV air terminals have automatic controls to a) turn off the terminal fan except when space heating is required or if required for ventilation; b) turn on the terminal fan as the first stage of heating before the heating coil is activated; and c) during heating for warmup or setback temperature control, either operate the terminal fan and heating coil without primary air or reverse the terminal damper logic and provide heating from the central air handler through primary air.			☐Complies ☐Does Not ☐Not Observable ☐Not Applicable	**Exception:** Requirement does not apply.
6.5.3.4 [ME108][2]	Parallel-flow fan-powered VAV air terminals have automatic controls to a) turn off the terminal fan except when space heating is required or if required for ventilation; b) turn on the terminal fan as the first stage of heating before the heating coil is activated; and c) during heating for warmup or setback temperature control, either operate the terminal fan and heating coil without primary air or reverse the terminal damper logic and provide heating from the central air handler through primary air.			☐Complies ☐Does Not ☐Not Observable ☐Not Applicable	**Exception:** Requirement does not apply.
6.5.3.4 [ME108][2]	Parallel-flow fan-powered VAV air terminals have automatic controls to a) turn off the terminal fan except when space heating is required or if required for ventilation; b) turn on the terminal fan as the first stage of heating before the heating coil is activated; and c) during heating for warmup or setback temperature control, either operate the terminal fan and heating coil without primary air or reverse the terminal damper logic and provide heating from the central air handler through primary air.			☐Complies ☐Does Not ☐Not Observable ☐Not Applicable	**Exception:** Requirement does not apply.
6.5.3.4 [ME108][2]	Parallel-flow fan-powered VAV air terminals have automatic controls to a) turn off the terminal fan except when space heating is required or if required for ventilation; b) turn on the terminal fan as the first stage of heating before the heating coil is activated; and c) during heating for warmup or setback temperature control, either operate the terminal fan and heating coil without primary air or reverse the terminal damper logic and provide heating from the central air handler through primary air.			☐Complies ☐Does Not ☐Not Observable ☐Not Applicable	**Exception:** Requirement does not apply.

1 High Impact (Tier 1) | 2 Medium Impact (Tier 2) | 3 Low Impact (Tier 3)

Section # & Req.ID	Mechanical Rough-In Inspection	Plans Verified Value	Field Verified Value	Complies?	Comments/Assumptions
6.5.3.4 [ME108][2]	Parallel-flow fan-powered VAV air terminals have automatic controls to a) turn off the terminal fan except when space heating is required or if required for ventilation; b) turn on the terminal fan as the first stage of heating before the heating coil is activated; and c) during heating for warmup or setback temperature control, either operate the terminal fan and heating coil without primary air or reverse the terminal damper logic and provide heating from the central air handler through primary air.			☐Complies ☐Does Not ☐Not Observable ☐Not Applicable	**Exception:** Requirement does not apply.
6.5.3.4 [ME108][2]	Parallel-flow fan-powered VAV air terminals have automatic controls to a) turn off the terminal fan except when space heating is required or if required for ventilation; b) turn on the terminal fan as the first stage of heating before the heating coil is activated; and c) during heating for warmup or setback temperature control, either operate the terminal fan and heating coil without primary air or reverse the terminal damper logic and provide heating from the central air handler through primary air.			☐Complies ☐Does Not ☐Not Observable ☐Not Applicable	**Exception:** Requirement does not apply.
6.5.3.4 [ME108][2]	Parallel-flow fan-powered VAV air terminals have automatic controls to a) turn off the terminal fan except when space heating is required or if required for ventilation; b) turn on the terminal fan as the first stage of heating before the heating coil is activated; and c) during heating for warmup or setback temperature control, either operate the terminal fan and heating coil without primary air or reverse the terminal damper logic and provide heating from the central air handler through primary air.			☐Complies ☐Does Not ☐Not Observable ☐Not Applicable	**Exception:** Requirement does not apply.
6.5.3.4 [ME108][2]	Parallel-flow fan-powered VAV air terminals have automatic controls to a) turn off the terminal fan except when space heating is required or if required for ventilation; b) turn on the terminal fan as the first stage of heating before the heating coil is activated; and c) during heating for warmup or setback temperature control, either operate the terminal fan and heating coil without primary air or reverse the terminal damper logic and provide heating from the central air handler through primary air.			☐Complies ☐Does Not ☐Not Observable ☐Not Applicable	**Exception:** Requirement does not apply.

1 High Impact (Tier 1) | 2 Medium Impact (Tier 2) | 3 Low Impact (Tier 3)

tsk
314 South Water Street,
Suite 100
Henderson, NV 89015
phone: 702.456.3000
fax: 702.898.6209
www.tska.com

THESE DRAWINGS AND SPECIFICATIONS ARE THE PROPERTY OF TATE SNYDER KIMSEY ARCHITECTS AND MAY NOT BE REPRODUCED OR USED FOR ANY PURPOSE WITHOUT THE ARCHITECTS WRITTEN CONSENT. AS INSTRUMENTS OF SERVICE, THESE DOCUMENTS ARE NOT FINAL AND READY FOR USE, AND THEREFORE NOT VALID, UNLESS THEY ARE SEALED, SIGNED AND DATED.

Consultant

IMEG
www.imegcorp.com
4590 LONGLEY LANE
RENO, NV 89502
P: 775.828.4899
PROJECT #22007707.00

IMEG CORP. RESERVES PROPRIETARY RIGHTS, INCLUDING COPYRIGHTS, TO THIS DRAWING AND THE DATA SHOWN THEREON. SAID DRAWING AND/OR DATA ARE THE EXCLUSIVE PROPERTY OF IMEG CORP. AND SHALL NOT BE USED OR REPRODUCED FOR ANY OTHER PROJECT WITHOUT THE EXPRESS WRITTEN APPROVAL AND PARTICIPATION OF IMEG CORP. ©2022 IMEG CORP.

0 1 2 3
REF. SCALE IN INCHES PROJECT #22007707.00

PLEASE RECYCLE

Project
SPARKS FIRE STATION #6

**6963 WINGFIELD HILLS ROAD,
SPARKS, NV 89436**

Job No: 22-043

Owner
CITY OF SPARKS

PROFESSIONAL ENGINEER - STATE OF NEVADA
KATHY O. CALLENDER
Exp:12/31/2024
MECHANICAL
No. 026794
01/03/2024

BID SET

REVISIONS

REV	DATE	DESCRIPTION

Sheet Title
MECHANICAL IECC

Date: 01/04/2024
Sheet No:
M8.02

Section # & Req.ID	Mechanical Rough-In Inspection	Plans Verified Value	Field Verified Value	Complies?	Comments/Assumptions
6.5.3.7 [ME109][2]	Required minimum outdoor air rate is the larger of minimum outdoor air rate or minimum exhaust air rate required by Standard 62.1, Standard 170, or applicable codes or accreditation standards. Outdoor air ventilation systems shall comply with one of the following: a) design minimum system outdoor air provided < 135% of the required minimum outdoor air rate, b) dampers, ductwork, and controls allow the system to supply <= the required minimum outdoor air rate with a single set-point adjustment., or c) system includes exhaust air energy recovery complying with Section 6.5.6.1.			☐Complies ☐Does Not ☐Not Observable ☐Not Applicable	Requirement will be met.
6.5.3.7 [ME109][2]	Required minimum outdoor air rate is the larger of minimum outdoor air rate or minimum exhaust air rate required by Standard 62.1, Standard 170, or applicable codes or accreditation standards. Outdoor air ventilation systems shall comply with one of the following: a) design minimum system outdoor air provided < 135% of the required minimum outdoor air rate, b) dampers, ductwork, and controls allow the system to supply <= the required minimum outdoor air rate with a single set-point adjustment., or c) system includes exhaust air energy recovery complying with Section 6.5.6.1.			☐Complies ☐Does Not ☐Not Observable ☐Not Applicable	Requirement will be met.
6.5.3.7 [ME109][2]	Required minimum outdoor air rate is the larger of minimum outdoor air rate or minimum exhaust air rate required by Standard 62.1, Standard 170, or applicable codes or accreditation standards. Outdoor air ventilation systems shall comply with one of the following: a) design minimum system outdoor air provided < 135% of the required minimum outdoor air rate, b) dampers, ductwork, and controls allow the system to supply <= the required minimum outdoor air rate with a single set-point adjustment., or c) system includes exhaust air energy recovery complying with Section 6.5.6.1.			☐Complies ☐Does Not ☐Not Observable ☐Not Applicable	Requirement will be met.

1 High Impact (Tier 1) 2 Medium Impact (Tier 2) 3 Low Impact (Tier 3)

Section # & Req.ID	Mechanical Rough-In Inspection	Plans Verified Value	Field Verified Value	Complies?	Comments/Assumptions
6.5.3.7 [ME109][2]	Required minimum outdoor air rate is the larger of minimum outdoor air rate or minimum exhaust air rate required by Standard 62.1, Standard 170, or applicable codes or accreditation standards. Outdoor air ventilation systems shall comply with one of the following: a) design minimum system outdoor air provided < 135% of the required minimum outdoor air rate, b) dampers, ductwork, and controls allow the system to supply <= the required minimum outdoor air rate with a single set-point adjustment., or c) system includes exhaust air energy recovery complying with Section 6.5.6.1.			☐Complies ☐Does Not ☐Not Observable ☐Not Applicable	Requirement will be met.
6.5.3.7 [ME109][2]	Required minimum outdoor air rate is the larger of minimum outdoor air rate or minimum exhaust air rate required by Standard 62.1, Standard 170, or applicable codes or accreditation standards. Outdoor air ventilation systems shall comply with one of the following: a) design minimum system outdoor air provided < 135% of the required minimum outdoor air rate, b) dampers, ductwork, and controls allow the system to supply <= the required minimum outdoor air rate with a single set-point adjustment., or c) system includes exhaust air energy recovery complying with Section 6.5.6.1.			☐Complies ☐Does Not ☐Not Observable ☐Not Applicable	Requirement will be met.
6.5.3.7 [ME109][2]	Required minimum outdoor air rate is the larger of minimum outdoor air rate or minimum exhaust air rate required by Standard 62.1, Standard 170, or applicable codes or accreditation standards. Outdoor air ventilation systems shall comply with one of the following: a) design minimum system outdoor air provided < 135% of the required minimum outdoor air rate, b) dampers, ductwork, and controls allow the system to supply <= the required minimum outdoor air rate with a single set-point adjustment., or c) system includes exhaust air energy recovery complying with Section 6.5.6.1.			☐Complies ☐Does Not ☐Not Observable ☐Not Applicable	Requirement will be met.
6.5.3.3 [ME42][3]	Multiple zone VAV systems with DDC of individual zone boxes have static pressure setpoint reset controls.			☐Complies ☐Does Not ☐Not Observable ☐Not Applicable	**Exception:** Requirement does not apply. *See the Mechanical Systems list for values.*

1 High Impact (Tier 1) 2 Medium Impact (Tier 2) 3 Low Impact (Tier 3)

Section # & Req.ID	Mechanical Rough-In Inspection	Plans Verified Value	Field Verified Value	Complies?	Comments/Assumptions
6.5.3.3 [ME42][3]	Multiple zone VAV systems with DDC of individual zone boxes have static pressure setpoint reset controls.			☐Complies ☐Does Not ☐Not Observable ☐Not Applicable	**Exception:** Requirement does not apply. *See the Mechanical Systems list for values.*
6.5.3.3 [ME42][3]	Multiple zone VAV systems with DDC of individual zone boxes have static pressure setpoint reset controls.			☐Complies ☐Does Not ☐Not Observable ☐Not Applicable	**Exception:** Requirement does not apply. *See the Mechanical Systems list for values.*
6.5.3.3 [ME42][3]	Multiple zone VAV systems with DDC of individual zone boxes have static pressure setpoint reset controls.			☐Complies ☐Does Not ☐Not Observable ☐Not Applicable	**Exception:** Requirement does not apply. *See the Mechanical Systems list for values.*
6.5.3.3 [ME42][3]	Multiple zone VAV systems with DDC of individual zone boxes have static pressure setpoint reset controls.			☐Complies ☐Does Not ☐Not Observable ☐Not Applicable	**Exception:** Requirement does not apply. *See the Mechanical Systems list for values.*
6.5.3.3 [ME42][3]	Multiple zone VAV systems with DDC of individual zone boxes have static pressure setpoint reset controls.			☐Complies ☐Does Not ☐Not Observable ☐Not Applicable	**Exception:** Requirement does not apply. *See the Mechanical Systems list for values.*
6.5.3.3 [ME42][3]	Multiple zone VAV systems with DDC of individual zone boxes have static pressure setpoint reset controls.			☐Complies ☐Does Not ☐Not Observable ☐Not Applicable	**Exception:** Requirement does not apply. *See the Mechanical Systems list for values.*
6.5.3.3 [ME42][3]	Multiple zone VAV systems with DDC of individual zone boxes have static pressure setpoint reset controls.			☐Complies ☐Does Not ☐Not Observable ☐Not Applicable	**Exception:** Requirement does not apply. *See the Mechanical Systems list for values.*
6.5.3.3 [ME42][3]	Multiple zone VAV systems with DDC of individual zone boxes have static pressure setpoint reset controls.			☐Complies ☐Does Not ☐Not Observable ☐Not Applicable	**Exception:** Requirement does not apply. *See the Mechanical Systems list for values.*
6.5.3.3 [ME42][3]	Multiple zone VAV systems with DDC of individual zone boxes have static pressure setpoint reset controls.			☐Complies ☐Does Not ☐Not Observable ☐Not Applicable	**Exception:** Requirement does not apply. *See the Mechanical Systems list for values.*
6.5.3.3 [ME42][3]	Multiple zone VAV systems with DDC of individual zone boxes have static pressure setpoint reset controls.			☐Complies ☐Does Not ☐Not Observable ☐Not Applicable	**Exception:** Requirement does not apply. *See the Mechanical Systems list for values.*
6.5.3.3 [ME42][3]	Multiple zone VAV systems with DDC of individual zone boxes have static pressure setpoint reset controls.			☐Complies ☐Does Not ☐Not Observable ☐Not Applicable	**Exception:** Requirement does not apply. *See the Mechanical Systems list for values.*
6.5.3.3 [ME42][3]	Multiple zone VAV systems with DDC of individual zone boxes have static pressure setpoint reset controls.			☐Complies ☐Does Not ☐Not Observable ☐Not Applicable	**Exception:** Requirement does not apply. *See the Mechanical Systems list for values.*
6.5.3.3 [ME42][3]	Multiple zone VAV systems with DDC of individual zone boxes have static pressure setpoint reset controls.			☐Complies ☐Does Not ☐Not Observable ☐Not Applicable	**Exception:** Requirement does not apply. *See the Mechanical Systems list for values.*

1 High Impact (Tier 1) 2 Medium Impact (Tier 2) 3 Low Impact (Tier 3)

Section # & Req.ID	Mechanical Rough-In Inspection	Plans Verified Value	Field Verified Value	Complies?	Comments/Assumptions
6.5.4.2 [ME25][3]	HVAC pumping systems with >= 3 control values designed for variable fluid flow (see section details).			☐Complies ☐Does Not ☐Not Observable ☐Not Applicable	**Exception:** Requirement does not apply.
7.5.3 [ME78][2]	Gas-fired water-heating equipment installed in new buildings: where a singular piece of water-heating equipment >= 1,000 kBtu/h serves the entire building, thermal efficiency must be >= 90 Et. Where multiple pieces of water-heating equipment serve the building with combined rating is >= 1,000 kBtu/h, the combined input-capacity-weighted-average thermal efficiency , thermal efficiency must be >= 90 Et. Exclude input rating of equipment in individual dwelling units and equipment <= 100 kBtu/h.			☐Complies ☐Does Not ☐Not Observable ☐Not Applicable	Requirement will be met.
7.5.3 [ME78][2]	Gas-fired water-heating equipment installed in new buildings: where a singular piece of water-heating equipment >= 1,000 kBtu/h serves the entire building, thermal efficiency must be >= 90 Et. Where multiple pieces of water-heating equipment serve the building with combined rating is >= 1,000 kBtu/h, the combined input-capacity-weighted-average thermal efficiency , thermal efficiency must be >= 90 Et. Exclude input rating of equipment in individual dwelling units and equipment <= 100 kBtu/h.			☐Complies ☐Does Not ☐Not Observable ☐Not Applicable	Requirement will be met.
6.5.6.1 [ME56][1]	Exhaust air energy recovery on systems meeting Tables 6.5.6.1-1, and 6.5.6.1-2.			☐Complies ☐Does Not ☐Not Observable ☐Not Applicable	**Exception:** Requirement does not apply.
6.5.7.1 [ME100][2]	Conditioned supply air to space with mechanical exhaust <= the greater of criteria of supply flow, required ventilation rate, exhaust flow minu the available transffer air (see section details).			☐Complies ☐Does Not ☐Not Observable ☐Not Applicable	Requirement will be met.
6.5.7.1 [ME100][2]	Conditioned supply air to space with mechanical exhaust <= the greater of criteria of supply flow, required ventilation rate, exhaust flow minu the available transffer air (see section details).			☐Complies ☐Does Not ☐Not Observable ☐Not Applicable	Requirement will be met.
6.5.7.1 [ME100][2]	Conditioned supply air to space with mechanical exhaust <= the greater of criteria of supply flow, required ventilation rate, exhaust flow minu the available transffer air (see section details).			☐Complies ☐Does Not ☐Not Observable ☐Not Applicable	Requirement will be met.

1 High Impact (Tier 1) 2 Medium Impact (Tier 2) 3 Low Impact (Tier 3)

Section # & Req.ID	Mechanical Rough-In Inspection	Plans Verified Value	Field Verified Value	Complies?	Comments/Assumptions
6.5.7.1 [ME100][2]	Conditioned supply air to space with mechanical exhaust <= the greater of criteria of supply flow, required ventilation rate, exhaust flow minu the available transffer air (see section details).			☐Complies ☐Does Not ☐Not Observable ☐Not Applicable	Requirement will be met.
6.5.7.1 [ME100][2]	Conditioned supply air to space with mechanical exhaust <= the greater of criteria of supply flow, required ventilation rate, exhaust flow minu the available transffer air (see section details).			☐Complies ☐Does Not ☐Not Observable ☐Not Applicable	Requirement will be met.
6.5.7.1 [ME100][2]	Conditioned supply air to space with mechanical exhaust <= the greater of criteria of supply flow, required ventilation rate, exhaust flow minu the available transffer air (see section details).			☐Complies ☐Does Not ☐Not Observable ☐Not Applicable	Requirement will be met.
6.5.7.1 [ME100][2]	Conditioned supply air to space with mechanical exhaust <= the greater of criteria of supply flow, required ventilation rate, exhaust flow minu the available transffer air (see section details).			☐Complies ☐Does Not ☐Not Observable ☐Not Applicable	Requirement will be met.
6.5.7.1 [ME100][2]	Conditioned supply air to space with mechanical exhaust <= the greater of criteria of supply flow, required ventilation rate, exhaust flow minu the available transffer air (see section details).			☐Complies ☐Does Not ☐Not Observable ☐Not Applicable	Requirement will be met.
6.5.7.1 [ME100][2]	Conditioned supply air to space with mechanical exhaust <= the greater of criteria of supply flow, required ventilation rate, exhaust flow minu the available transffer air (see section details).			☐Complies ☐Does Not ☐Not Observable ☐Not Applicable	Requirement will be met.
6.5.7.1 [ME100][2]	Conditioned supply air to space with mechanical exhaust <= the greater of criteria of supply flow, required ventilation rate, exhaust flow minu the available transffer air (see section details).			☐Complies ☐Does Not ☐Not Observable ☐Not Applicable	Requirement will be met.
6.5.7.1 [ME100][2]	Conditioned supply air to space with mechanical exhaust <= the greater of criteria of supply flow, required ventilation rate, exhaust flow minu the available transffer air (see section details).			☐Complies ☐Does Not ☐Not Observable ☐Not Applicable	Requirement will be met.
6.5.7.1 [ME100][2]	Conditioned supply air to space with mechanical exhaust <= the greater of criteria of supply flow, required ventilation rate, exhaust flow minu the available transffer air (see section details).			☐Complies ☐Does Not ☐Not Observable ☐Not Applicable	Requirement will be met.
6.5.7.2.1 [ME32][2]	Kitchen hoods >5,000 cfm have make up air >=50% of exhaust air volume.			☐Complies ☐Does Not ☐Not Observable ☐Not Applicable	**Exception:** Requirement does not apply.
6.5.7.2.4 [ME49][3]	Approved field test used to evaluate design air flow rates and demonstrate proper capture and containment of kitchen exhaust systems.			☐Complies ☐Does Not ☐Not Observable ☐Not Applicable	**Exception:** Requirement does not apply.

1 High Impact (Tier 1) 2 Medium Impact (Tier 2) 3 Low Impact (Tier 3)

Section # & Req.ID	Mechanical Rough-In Inspection	Plans Verified Value	Field Verified Value	Complies?	Comments/Assumptions
6.5.8.1 [ME34][2]	Unenclosed spaces that are heated use only radiant heat.			☐Complies ☐Does Not ☐Not Observable ☐Not Applicable	**Exception:** Requirement does not apply.
6.5.9 [ME35][1]	Hot gas bypass limited to: <=240 kBtu/h - 15% >240 kBtu/h - 10%			☐Complies ☐Does Not ☐Not Observable ☐Not Applicable	Requirement will be met.
6.5.9 [ME35][1]	Hot gas bypass limited to: <=240 kBtu/h - 15% >240 kBtu/h - 10%			☐Complies ☐Does Not ☐Not Observable ☐Not Applicable	Requirement will be met.
6.5.9 [ME35][1]	Hot gas bypass limited to: <=240 kBtu/h - 15% >240 kBtu/h - 10%			☐Complies ☐Does Not ☐Not Observable ☐Not Applicable	Requirement will be met.
7.4.2 [ME36][2]	Service water heating equipment meets efficiency requirements.			☐Complies ☐Does Not ☐Not Observable ☐Not Applicable	
7.4.2 [ME36][2]	Service water heating equipment meets efficiency requirements.			☐Complies ☐Does Not ☐Not Observable ☐Not Applicable	
6.4.3.9 [ME63][2]	Heating for vestibules and air curtains with integral heating include automatic controls that shut off the heating system when outdoor air temperatures > 45F. Vestibule heating and cooling systems controlled by a thermostat in the vestibule with heating setpoint <= 60F and cooling setpoint >= 80F.			☐Complies ☐Does Not ☐Not Observable ☐Not Applicable	**Exception:** Requirement does not apply.
6.5.10 [ME73][3]	Doors separating conditioned space from the outdoors have controls that disable/reset heating and cooling system when open.			☐Complies ☐Does Not ☐Not Observable ☐Not Applicable	**Exception:** Building entrances have automatic closing devices.

Additional Comments/Assumptions:

1 High Impact (Tier 1) 2 Medium Impact (Tier 2) 3 Low Impact (Tier 3)

Section # & Req.ID	Rough-In Electrical Inspection	Complies?	Comments/Assumptions
8.4.2 [EL10][2]	At least 50% of all 125 volt 15- and 20-Amp receptacles are controlled by an automatic control device.	☐Complies ☐Does Not ☐Not Observable ☐Not Applicable	**Exception:** Requirement does not apply.
8.4.3 [EL11][2]	New buildings have electrical energy use measurement devices installed. Where tenant spaces exist, each tenant is monitored separately. In buildings with a digital control system the energy use is transmitted to to control system and displayed graphically.	☐Complies ☐Does Not ☐Not Observable ☐Not Applicable	Requirement will be met.
10.4.1 [EL9][2]	Electric motors meet requirements where applicable.	☐Complies ☐Does Not ☐Not Observable ☐Not Applicable	Requirement will be met.

Additional Comments/Assumptions:

1 High Impact (Tier 1) 2 Medium Impact (Tier 2) 3 Low Impact (Tier 3)

Section # & Req.ID	Final Inspection	Complies?	Comments/Assumptions
6.4.3.1.2 [FI3][3]	Thermostatic controls have a 5 °F deadband.	☐Complies ☐Does Not ☐Not Observable ☐Not Applicable	Requirement will be met.
6.4.3.2 [FI20][3]	Temperature controls have setpoint overlap restrictions.	☐Complies ☐Does Not ☐Not Observable ☐Not Applicable	Requirement will be met.
6.4.3.3.1 [FI21][3]	HVAC systems equipped with at least one automatic shutdown control.	☐Complies ☐Does Not ☐Not Observable ☐Not Applicable	Requirement will be met.
6.4.3.3.2 [FI22][3]	Setback controls allow automatic restart and temporary operation as required for maintenance.	☐Complies ☐Does Not ☐Not Observable ☐Not Applicable	Requirement will be met.
6.4.3.5 [FI5][3]	Heat pump controls prevent supplemental electric resistance heat from coming on when not needed.	☐Complies ☐Does Not ☐Not Observable ☐Not Applicable	Requirement will be met.
6.4.3.6 [FI6][3]	When humidification and dehumidification are provided to a zone, simultaneous operation is prohibited. Humidity control prohibits the use of fossil fuel or electricity to produce RH > 30% in the warmest zone humidified and RH < 60% in the coldest zone dehumidified.	☐Complies ☐Does Not ☐Not Observable ☐Not Applicable	Requirement will be met.
6.7.2.1 [FI7][3]	Furnished HVAC as-built drawings submitted within 90 days of system acceptance.	☐Complies ☐Does Not ☐Not Observable ☐Not Applicable	Requirement will be met.
6.7.2.2 [FI8][3]	Furnished O&M manuals for HVAC systems within 90 days of system acceptance.	☐Complies ☐Does Not ☐Not Observable ☐Not Applicable	Requirement will be met.
6.7.2.3 [FI9][1]	An air and/or hydronic system balancing report is provided for HVAC systems serving zones >5,000 ft2 of conditioned area.	☐Complies ☐Does Not ☐Not Observable ☐Not Applicable	Requirement will be met.
6.7.2.4 [FI10][1]	HVAC control systems have been tested to ensure proper operation, calibration and adjustment of controls.	☐Complies ☐Does Not ☐Not Observable ☐Not Applicable	Requirement will be met.
7.4.4.3 [FI11][3]	Public lavatory faucet water temperature <=110°F.	☐Complies ☐Does Not ☐Not Observable ☐Not Applicable	Requirement will be met.
7.4.4.3 [FI11][3]	Public lavatory faucet water temperature <=110°F.	☐Complies ☐Does Not ☐Not Observable ☐Not Applicable	Requirement will be met.

1 High Impact (Tier 1) 2 Medium Impact (Tier 2) 3 Low Impact (Tier 3)

Section # & Req.ID	Final Inspection	Complies?	Comments/Assumptions
7.4.4.4 [FI12][3]	Controls are installed that limit the operation of a recirculation pump installed to maintain temperature of a storage tank.	☐Complies ☐Does Not ☐Not Observable ☐Not Applicable	Requirement will be met.
7.4.4.4 [FI12][3]	Controls are installed that limit the operation of a recirculation pump installed to maintain temperature of a storage tank.	☐Complies ☐Does Not ☐Not Observable ☐Not Applicable	Requirement will be met.
10.4.3 [FI24][2]	Elevators are designed with the proper lighting, ventilation power, and standby mode.	☐Complies ☐Does Not ☐Not Observable ☐Not Applicable	**Exception:** Requirement does not apply.

Additional Comments/Assumptions:

tsk
314 South Water Street,
Suite 100
Henderson, NV 89015
phone: 702.456.3000
fax: 702.898.6209
www.tska.com

THESE DRAWINGS AND SPECIFICATIONS ARE THE PROPERTY OF TATE SNYDER KIMSEY ARCHITECTS AND MAY NOT BE REPRODUCED OR USED FOR ANY PURPOSE WITHOUT THE ARCHITECTS WRITTEN CONSENT.
AS INSTRUMENTS OF SERVICE, THESE DOCUMENTS ARE NOT FINAL AND READY FOR USE, AND THEREFORE NOT VALID, UNLESS THEY ARE SEALED, SIGNED AND DATED.

Consultant

IMEG
4599 LONGLEY LANE
RENO, NV 89502
P: 775.828.4889
PROJECT #22007707.00
www.imegcorp.com

IMEG CORP. RESERVES PROPRIETARY RIGHTS, INCLUDING COPYRIGHTS, TO THIS DRAWING AND THE DATA SHOWN THEREON. SAID DRAWING AND/OR DATA ARE THE EXCLUSIVE PROPERTY OF IMEG CORP. AND SHALL NOT BE USED OR REPRODUCED FOR ANY OTHER PROJECT WITHOUT THE EXPRESS WRITTEN APPROVAL AND PARTICIPATION OF IMEG CORP. ©2022 IMEG CORP.

0 1 2 3
REF. SCALE IN INCHES PROJECT #22007707.00

PLEASE RECYCLE

Project
SPARKS FIRE STATION #6

6963 WINGFIELD HILLS ROAD, SPARKS, NV 89436

Job No: 22-043

Owner
CITY OF SPARKS

PROFESSIONAL ENGINEER - STATE OF NEVADA
KATHRYN CALLENDER
Exp: 12/31/2024
MECHANICAL
No. 026794
01/03/2024

BID SET

REVISIONS		
REV	DATE	DESCRIPTION

Sheet Title
MECHANICAL IECC

Date: 01/04/2024
Sheet No:
M8.03

FOR QUESTIONS, CALL THE
Northern Nevada Mechanical
REGION 113
PHONE: (775) 236-5843
EMAIL: reg113@captiveaire.com

PATENT NUMBERS

EXHAUST HOODS ND-2/BD-2/SND-2 (CANADA) - CA PATENT 2520435 C.

HOOD INFORMATION – JOB#5921144

HOOD NO	TAG	MODEL	MANUFACTURER	LENGTH	MAX COOKING TEMP	TYPE	APPLIANCE DUTY	DESIGN CFM/FT	TOTAL EXH CFM	EXHAUST PLENUM RISER(S) WIDTH	LENG	HEIGHT	DIA	CFM	VEL	SP	HOOD CONSTRUCTION	HOOD CONFIG END TO END	ROW
1	KH-1	6024 ND-2	CAPTIVEAIRE	6' 0"	600 DEG	I	HEAVY	250	1500			4"	12"	1500	1910	-0.788"	430 SS WHERE EXPOSED	ALONE	ALONE

HOOD INFORMATION

HOOD NO	TAG	FILTER(S) TYPE	QTY	HEIGHT	LENGTH	EFFICIENCY @ 7 MICRONS	LIGHT(S) QTY	TYPE	WIRE GUARD	UTILITY CABINET(S) LOCATION	SIZE	FIRE SYSTEM TYPE	SIZE	ELECTRICAL MODEL #	SWITCHES QUANTITY	FIRE SYSTEM PIPING	HOOD HANGING WEIGHT
1	KH-1	CAPTRATE SOLO FILTER	4	20"	16"	85% SEE FILTER SPEC	4	RECESSED ROUND	NO	LEFT	12"x60"x24"	TANK FS	4.0/4.0	SC-110110MA	1 LIGHT 1 FAN	YES	724 LBS

HOOD OPTIONS

HOOD NO	TAG	OPTION
1	KH-1	FIELD WRAPPER 4.00" HIGH FRONT, LEFT, RIGHT.
		BACKSPLASH 80.00" HIGH X 84.00" LONG 430 SS VERTICAL.
		RIGHT QUARTER END PANEL 23" TOP WIDTH, 0" BOTTOM WIDTH, 23" HIGH 430 SS.
		LEFT QUARTER END PANEL 23" TOP WIDTH, 0" BOTTOM WIDTH, 23" HIGH 430 SS.
		INSULATION FOR TOP OF HOOD.
		INSULATION FOR BACK OF HOOD.
		RISER SENSOR INSTALL 6IN PLEN.

(S) GREASE DUCT & CHIMNEY SPECIFICATIONS:
PROVIDE GREASE DUCT EQUAL TO CAPTIVEAIRE SYSTEMS MODEL "DW" ROUND 20 GAUGE 430 STAINLESS STEEL DUCTWORK. MODEL "DW" IS LISTED TO UL-1978 AND IS INSTALLED USING "V" CLAMP LOCKING CONNECTIONS SEALED WITH 3M FIRE BARRIER 2000 PLUS. MODEL "DW" DOES NOT REQUIRE WELDING PROVIDING IT HAS BEEN INSTALLED PER THE MANUFACTURES INSTALLATION GUIDE.
PROVIDE RATED ACCESS DOORS AT EVERY CHANGE IN DIRECTION AND EVERY 12' ON CENTER. PER MANUFACTURES LISTING MODEL "DW" HORIZONTAL RUNS LESS THAN 75 FT. CAN BE SLOPED 1/16" PER 12", HORIZONTAL RUNS MORE THAN 75 FT. CAN BE SLOPED 3/16" PER 12". DUCT SHOULD BE SLOPED AS MUCH AS POSSIBLE TO REDUCE THE CHANCE OF GREASE ACCUMULATION IN HORIZONTAL RUNS.

IF THE DUCT OR CHIMNEY IS WITHIN 18 INCHES OF COMBUSTIBLE MATERIAL, PROVIDE UL-2221 OR UL-103 HT LISTED DOUBLE WALL GREASE DUCT OR DOUBLE WALL CHIMNEY EQUAL TO CAPTIVEAIRE SYSTEMS MODEL "DW- 2R, 2R TYPE HT, 3R, OR 3Z" ROUND 20 GAUGE 430 STAINLESS INNER DUCT INSULATED WITH A 24 GAUGE 430 STAINLESS OUTER SHELL.

CAPTIVEAIRE SYSTEMS RECOMMENDS THE USE OF LISTED, PRE-FABRICATED ROUND GREASE EXHAUST DUCT TO REDUCE STATIC PRESSURE IN THE SYSTEM, MINIMIZE INSTALLATION AND INSPECTION TIMES, AND ENSURE DUCT IS LIQUID TIGHT

HVAC DISTRIBUTION NOTE

HIGH VELOCITY DIFFUSERS OR HVAC RETURNS SHOULD NOT BE PLACED WITHIN TEN (10) FEET OF THE EXHAUST HOOD. PERFORATED DIFFUSERS ARE RECOMMENDED.

VERIFY CEILING HEIGHT

___' - ___"

HEIGHT REQUIRED TO VERIFY THAT HOOD FITS SPACE AND TO SIZE THE ENCLOSURE PANELS

CUSTOMER APPROVAL TO MANUFACTURE:

APPROVED AS NOTED ☐
APPROVED WITH NO EXCEPTION TAKEN ☐
REVISE AND RESUBMIT ☐
SIGNATURE _____
YOUR TITLE _____ DATE _____

SPECIFICATION: CAPTRATE• GREASE-STOP• SOLO FILTER

THE CAPTRATE GREASE-STOP SOLO FILTER IS A SINGLE-STAGE FILTER FEATURING A UNIQUE S-BAFFLE DESIGN IN CONJUNCTION WITH A SLOTTED REAR BAFFLE DESIGN, TO DELIVER EXCEPTIONAL FILTRATION EFFICIENCY.

FILTER IS STAINLESS STEEL CONSTRUCTION, AND SIZED TO FIT INTO STANDARD 2-INCH DEEP HOOD CHANNEL(S).

UNITS SHALL INCLUDE STAINLESS STEEL HANDLES AND A FASTENING DEVICE TO SECURE THE TWO COMPONENTS WHEN ASSEMBLED.

GREASE EXTRACTION EFFICIENCY PERFORMANCE SHALL REMOVE AT LEAST 75% OF GREASE PARTICLES FIVE MICRONS IN SIZE, AND 85% GREASE PARTICLES SEVEN MICRONS IN SIZE AND LARGER, WITH A CORRESPONDING PRESSURE DROP NOT TO EXCEED 1.0 INCHES OF WATER GAUGE.

THE CAPTRATE GREASE-STOP SOLO WAS TESTED TO ASTM STANDARD ASTM F2519-05.
MANUFACTURER APPROVED FOR USE IN SOLID FUEL APPLICATIONS AS A SPARK ARRESTER.

EFFICIENCY VS. PARTICLE DIAMETER

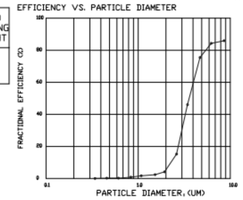

PRESSURE DROP VS. FLOW RATE

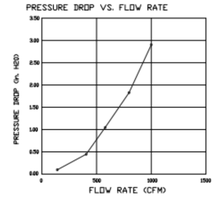

CAPTRATE FILTERS ARE BUILT IN COMPLIANCE WITH:
NFPA #96.
NSF STANDARD #2.
UL STANDARD #1046.
INT. MECH. CODE (IMC).
ULC-S649.

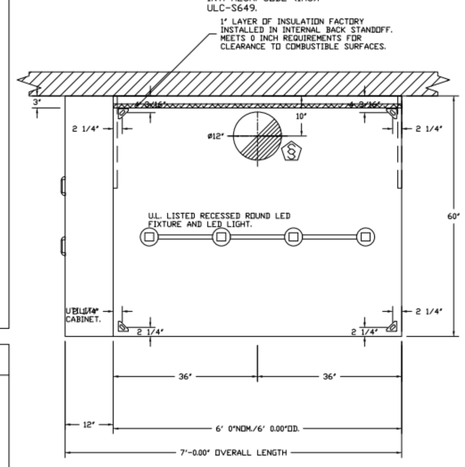

PLAN VIEW – HOOD #1 (KH-1)
6' 0.00" LONG 6024ND-2

HOOD CORNER HANGING ANGLE (HARDWARE BY INSTALLER)

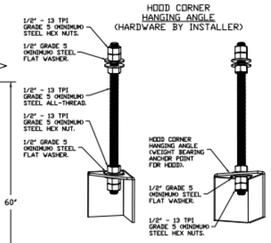

ASSEMBLY INSTRUCTIONS

HANGING ANGLE MUST BE SUPPORTED WITH 1/2" - 13 TPI GRADE 5 (MINIMUM) ALL-THREAD. SANDWICH HANGING ANGLES AND CEILING ANCHOR POINTS WITH 1/2" GRADE 5 (MINIMUM) STEEL FLAT WASHERS AND 1/2" - 13 TPI GRADE 5 (MINIMUM) HEX NUTS AS SHOWN. MUST USE DOUBLED HEX NUT CONFIGURATION BENEATH HOOD HANGING ANGLES AND ABOVE CEILING ANCHORS. MAINTAIN 1/4" OF EXPOSED THREADS BENEATH BOTTOM HEX NUT. TORQUE ALL HEX NUTS TO 57 FT-LBS.

FULL LENGTH HANGING ANGLE (HARDWARE BY INSTALLER)

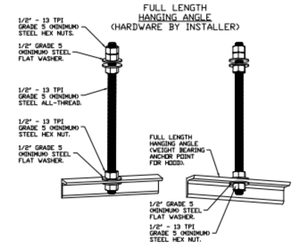

ASSEMBLY INSTRUCTIONS

HANGING ANGLE MUST BE SUPPORTED WITH 1/2" - 13 TPI GRADE 5 (MINIMUM) ALL-THREAD. SANDWICH HANGING ANGLES AND CEILING ANCHOR POINTS WITH 1/2" GRADE 5 (MINIMUM) STEEL FLAT WASHERS AND 1/2" - 13 TPI GRADE 5 (MINIMUM) HEX NUTS AS SHOWN. MUST USE DOUBLED HEX NUT CONFIGURATION ABOVE CEILING ANCHORS. SINGLE HEX NUT BENEATH HANGING ANGLE IS ACCEPTABLE FOR FULL LENGTH HANGING ANGLES. MAINTAIN 1/4" OF EXPOSED THREADS BENEATH BOTTOM HEX NUT. TORQUE ALL HEX NUTS TO 57 FT-LBS.

REVISIONS
DESCRIPTION | DATE:

CAPTIVEAIRE
www.captiveaire.com
Northern Nevada Mechanical
P.O. Box 17489, Reno, NV, 89511 PHONE: (775) 236-5843 FAX: (919) 516-8720 EMAIL: reg113@captiveaire.com

Sparks Fire Station #6 R1
SPARKS, NV, 89431

DATE: 3/24/2023
DWG.#: 5921144
DRAWN BY: Region 113
SCALE: 3/4" = 1'-0"
MASTER DRAWING
SHEET NO. 1

tsk
314 South Water Street,
Suite 100
Henderson, NV 89015
phone: 702.456.3000
fax: 702.898.6209
www.tska.com

THESE DRAWINGS AND SPECIFICATIONS ARE THE PROPERTY OF TATE SNYDER KIMSEY ARCHITECTS AND MAY NOT BE REPRODUCED OR USED FOR ANY PURPOSE WITHOUT THE ARCHITECTS WRITTEN CONSENT. AS INSTRUMENTS OF SERVICE, THESE DOCUMENTS ARE NOT FINAL AND READY FOR USE, AND THEREFORE NOT VALID, UNLESS THEY ARE SEALED, SIGNED AND DATED.

Consultant

IMEG
4590 LONGLEY LANE
RENO, NV 89502
P: 775.826.4899
PROJECT #22007707.00
www.imegcorp.com

IMEG CORP. RESERVES PROPRIETARY RIGHTS, INCLUDING COPYRIGHTS, TO THIS DRAWING AND THE DATA SHOWN THEREON. SAID DRAWING AND/OR DATA ARE THE EXCLUSIVE PROPERTY OF IMEG CORP. AND SHALL NOT BE USED OR REPRODUCED FOR ANY OTHER PROJECT WITHOUT THE EXPRESS WRITTEN APPROVAL AND PARTICIPATION OF IMEG CORP. ©2022 IMEG CORP.

REF. SCALE IN INCHES 0 1 2 3 PROJECT #22007707.00

PLEASE RECYCLE

Project
SPARKS FIRE STATION #6

6963 WINGFIELD HILLS ROAD, SPARKS, NV 89436

Job No: 22-043
Owner
CITY OF SPARKS

PROFESSIONAL ENGINEER - STATE OF NEVADA
KATHRYN J. DALLENDER
Exp:12/31/2024
MECHANICAL
No. 026794
01/03/2024

BID SET

REVISIONS

REV	DATE	DESCRIPTION

Sheet Title
HOOD SHOP DRAWINGS

Date: 01/04/2024
Sheet No:
M9.01

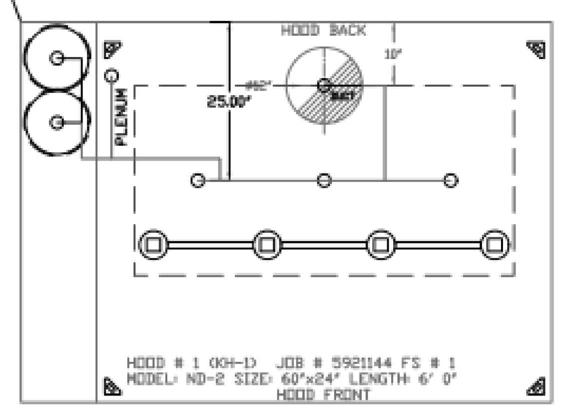

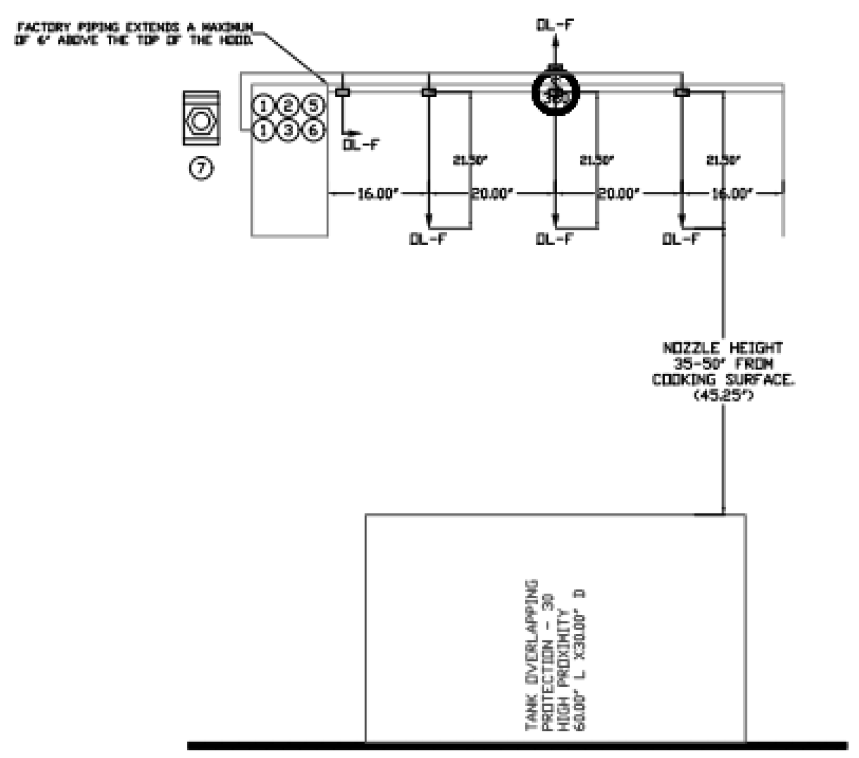

NOTES
- FIELD PIPE DROPS AS SHOWN
  PIPING, ELBOWS, TEES, AND NOZZLES SUPPLIED BY CAS.
- FIELD INSTALLED DROP: FACTORY WILL PROVIDE QTY 2 60IN LONG PIECES OF CHROME PLATED PIPING SHIPPED LOOSE TO BE FIELD-INSTALLED.
- SHIP LOOSE DROP: FACTORY WILL PROVIDE THE EXACT CHROME PIPE LENGTH NEEDED SHIPPED LOOSE TO BE FIELD-INSTALLED.
- RELOCATE NOZZLES IF FLOW PATTERN IS BLOCKED BY SHELVING, SALAMANDERS, ETC.
- OVERLAPPING COVERAGE SHALL NOT BE USED ON ANY APPLIANCE WITH AN OBSTRUCTION.
- IF APPLICABLE, EXTENDED PRE-PIPED DROPS ARE SHIPPED LOOSE.
- FACTORY PIPING EXTENDS A MAXIMUM OF 6" ABOVE THE TOP OF THE HOOD.

- APPLIANCE DIMENSIONS LISTED REPRESENT THE COOKING SURFACE SIZE, NOT THE OVERALL APPLIANCE SIZE.

- THIS FIRE SYSTEM COMPLIES WITH U.L. 300 REQUIREMENTS.

- DL-F NOZZLE PART NUMBER REPLACES 3070-3/8H-10-SS

JOB #: 5921144.
JOB NAME: SPARKS FIRE STATION #6 R1.

SYSTEM SIZE: TANK-SP-2 TOTAL FP REQUIRED: 23.
HOOD # 1 6' 0.00" LONG x 60" WIDE x 24" HIGH.
RISER # 1 SIZE: 12" DIA.
HOOD # 1 METAL BLOW-OFF CAPS INCLUDED.

- HEAVY-DUTY APPLIANCES (RATED 600°F) WILL REQUIRE AN ADDITIONAL DOWNSTREAM FIRESTAT IN THE EVENT THAT THE DUCTWORK CONTAINS ANY HORIZONTAL RUNS OVER 25 FT IN LENGTH.
- MEDIUM TO LIGHT-DUTY APPLIANCES (RATED 450°F) WILL NOT REQUIRE ANY ADDITIONAL DOWNSTREAM DETECTION.

LEGEND - FIRE CABINET TANK SYSTEM

1 4 GALLON TANK.
2 PRIMARY ACTUATOR RELEASE.
3 SECONDARY ACTUATOR RELEASE.
4 PRESSURE SUPERVISION SWITCH.
5 PRIMARY HOSE ASSEMBLY.
6 SECONDARY HOSE ASSEMBLY.
7 REMOTE MANUAL ACTUATION DEVICE.

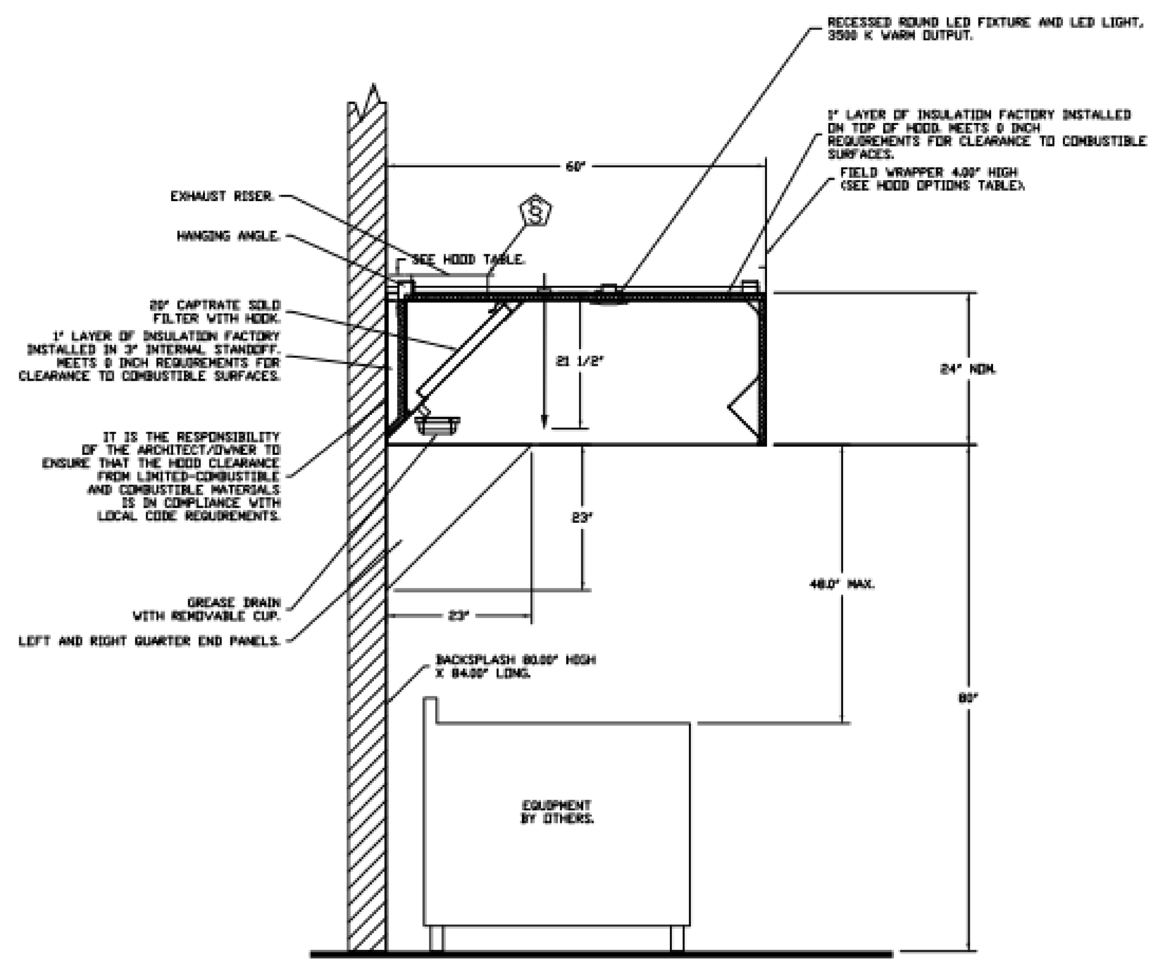

SECTION VIEW - MODEL 6024ND-2
HOOD - #1

INCLUDES: FIELD INSTALLATION AND HOOKUP DURING NORMAL BUSINESS HOURS BY CERTIFIED INSTALLERS ONLY IN THE LOCATION NOTED ABOVE, TWO SITE VISITS ONLY (ONE VISIT TO SET PULL STATION & SYSTEM HOOKUP AND ONE VISIT FOR ONE TEST; ADDITIONAL VISITS WILL RESULT IN ADDITIONAL CHARGES), ONE MECHANICAL OR ELECTRICAL GAS VALVE PER SYSTEM AT A MAXIMUM SIZE OF 2", PERMIT, AND SYSTEM TEST.
EXCLUDES: UNION LABOR & PREVAILING WAGE (LABOR & WAGES WILL BE ADDED IF APPLICABLE), GAS VALVE INSTALLATION, ELECTRICAL HOOKUP AND CONNECTIONS, HANGING OF FIRE CABINET, SHUNT TRIP, HANDHELD EXTINGUISHER(S), ON-SITE RE-PIPING DUE TO EQUIPMENT LAYOUT CHANGES.

GAS VALVES AND STRAINERS

	GAS VALVE SIZING							GAS VALVE DIMENSIONS						INSTALLATION	PART NUMBERS		
	TYPE	SIZE	VOLTAGE	MIN. INLET PRESSURE	MAX. INLET PRESSURE	FLOW AT 1 IN.W.C. DROP NATURAL GAS	FLOW AT 1 IN.W.C. DROP PROPANE	DIM "A"	DIM "B"	DIM "C"	DIM "D"	DIM "F"	DIM "G"	MOUNTING ORIENTATION	GAS VALVE PART NUMBER	STRAINER PART NUMBER	GAS VALVE/STRAINER KIT
GAS VALVE FOR FS#1 →	ELECTRICAL	1"	120 VAC	0 PSI (0 IN.W.C.)	5 PSI (138 IN.W.C.)	1,132,300 BTU/HR	734,733 BTU/HR	6-15/16"	5-15/16"	4-7/8"	5-3/16"	12-13/16"	10-11/16"	HORIZONTAL/ VERTICAL	8214250	4417K65	(SC)EGVA1

ALL GAS VALVES/STRAINERS
PROPER CLEARANCE MUST BE PROVIDED IN ORDER TO SERVICE THE STRAINERS A MINIMUM OF 4" CLEARANCE DISTANCE MUST BE PROVIDED AT THE BASE OF THE STRAINER CUSTOMER MUST VERIFY BTU CONSUMPTION AS WELL AS PRESSURE RATING SPECIFIC GRAVITY OF NATURAL GAS = 0.64, SPECIFIC GRAVITY OF LP = 1.52.

CALCULATIONS
TO CALCULATE GAS FLOW FOR OTHER THAN 1 IN.W.C. PRESSURE DROP
NEW BTU/HR = (BTU/HR AT 1 IN.W.C. PRESSURE DROP) X NEW PRESSURE DROP$^{0.5}$
TO CALCULATE GAS FLOW FOR OTHER THAN 0.64 SPECIFIC GRAVITY
NEW BTU/HR = (BTU/HR AT 0.64) X (0.64 / NEW SPECIFIC GRAVITY)$^{0.5}$.

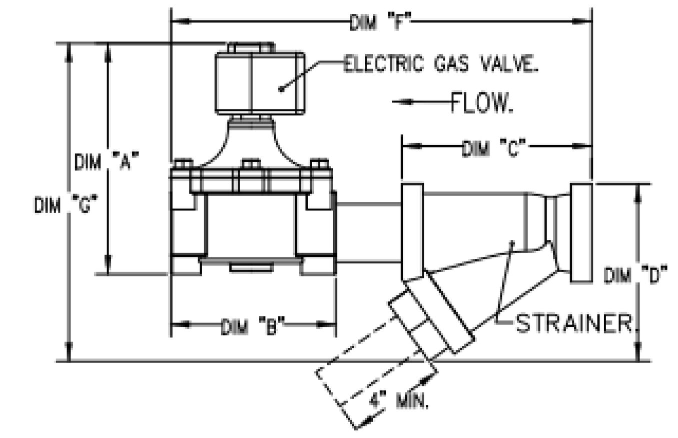

FIRE SYSTEM INFORMATION - JOB#5921144

FIRE SYSTEM NO	TAG	TYPE	SIZE	FLOW POINTS	INSTALLATION	
					SYSTEM	LOCATION ON HOOD
1	FSS-1	TANK FS	4.0/4.0	23	FIRE CABINET LEFT	LEFT, HOOD 1

GAS VALVE(S)

FIRE SYSTEM NO	TAG	TYPE	SIZE	SUPPLIED BY
1	FSS-1	SC ELECTRICAL	1.000	CAPTIVEAIRE SYSTEMS

FIRE SYSTEM PARTS LIST KEY

FIRE SYSTEM NO	TAG	KEY NUMBER - PART DESCRIPTION	QTY BY FACTORY	QTY BY DIST
1	FSS-1	0 - 0 - TANK FIRE SUPPRESSION POST-DISCHARGE PROCEDURE UTILITY CABINET LABEL SHEET.	1	0
		0 - 0 - TANK FIRE SUPPRESSION MAINTENANCE GUIDE UTILITY CABINET LABEL SHEET.	1	0
		0 - 0 - 12-F28021-32144-DT-360 DUCT FIRE THERMOSTAT WITH 12 FOOT WIRE LEADS. NO, CLOSE ON TEMP RISE AT 360°F.	1	0
		0 - 0 - 4429K153 1/2" MALE NPT TO 1/2" FEMALE NPT ELBOW, BRASS.	2	0
		0 - 0 - 4429K422 1/2" X 1/4" BRASS REDUCING BUSHING.	1	0
		0 - 0 - 79525 1/2" 90 PRO-PRESS ELBOW WITH 1/2" NPT FEMALE CONNECTION, VIEGA.	1	0
		0 - 0 - 79580 1/2" X 1/2" PRO-PRESS TEE X 1/2" NPT FEMALE CONNECTION, VIEGA.	2	0
		0 - 0 - 87-120042-001 SECONDARY ACTUATOR VALVE (SVA) - SINGLE ACTUATOR, REQUIRES PRIMARY RELEASE ACTUATOR, TANK FIRE SUPPRESSION.	1	0
		0 - 0 - 87-120045-001 HOSE, SECONDARY ACTUATOR HOSE, 7.5" BRAIDED STAINLESS STEEL, TANK FIRE SUPPRESSION.	1	0
		0 - 0 - 87-300001-001 TANK - PRESSURIZED TANK USED FOR TANK FIRE SUPPRESSION.	2	0
		0 - 0 - 87-300030-001 PRIMARY ACTUATOR KIT (PAK) - ACTUATOR AND RELEASE SOLENOID ASSEMBLY, ONE NEEDED PER FIRE SYSTEM, SUPERVISED, TANK FIRE SUPPRESSION.	1	0
		0 - 0 - 87-300152-001 HARDWARE, SVA BOLTS, TANK FIRE SUPPRESSION.	8	0
		0 - 0 - 9055455PC PRO PRESS 1/2 PRESS X PRESS 90 ELBOW LD.	6	0
		0 - 0 - 9097200PC PRO PRESS PC611 1/2 PRESS TEE LD.	4	0
		0 - 0 - 98694A115 HARDWARE, DATANKLOCK LOCKING BRACKET SQUARE NUTS 5/16" ZINC, TANK FIRE SUPPRESSION.	4	0
		0 - 0 - A0034332 JUNCTION BOX FOR MANUAL PULL STATION. 1.5" DEEP BACK BOX, RED COLOR.	1	0
		0 - 0 - A31484 1/4" NPT SCHRADER VALVE AND CAP, JB INDUSTRIES. 1/4" FLARE X 1/4" MPT HALF UNION. USED ON TANK SERVICE PORT.	1	0
		0 - 0 - BI145 3/8" BLACK IRON 90 ELL.	2	0
		0 - 0 - DATANKLOCK DISCHARGE ADAPTER TANK LOCKING PLATE FOR FIRE SYSTEM TANK INSTALLATION IN UTILITY CABINETS, TANK FIRE SUPPRESSION.	2	0
		0 - 0 - TANK STRAP TANK STRAP - USED FOR TANK FIRE SUPPRESSION.	6	0
		0 - 0 - TFS-UCTANKBRACKET TANK BRACKET FOR FIRE SYSTEM TANK INSTALLATION IN UTILITY CABINETS, TANK FIRE SUPPRESSION.	2	0
		0 - 0 - WK-283952-000 DISCHARGE ADAPTER, TANK FIRE SUPPRESSION.	2	0
		16 - 16 - 79210 1/2" X 3/8" NPT MALE ADAPTER, VIEGA.	5	0
		16 - 16 - DL-F NOZZLE - TANK PROTECTION APPLIANCE COVERAGE NOZZLE (INCLUDES METAL BLOW OFF CAP, LANYARD, USED WITH CHROME-PLATED PIPE)- 4 FLOW POINTS.	5	0
		26 - 26 - QSA-3/8 QUIK SEAL - 3/8" (UL).	5	0
		34 - 34 - A0034331 24VDC SINGLE ACTION MANUAL ACTUATION DEVICE (PUSH/PULL STATION) WITH PROTECTIVE COVER, ONE (1) NORMALLY OPEN CONTACT. RED COLOR.	1	0

tsk
314 South Water Street,
Suite 100
Henderson, NV 89015
phone: 702.456.3000
fax: 702.898.6209
www.tska.com

THESE DRAWINGS AND SPECIFICATIONS ARE THE PROPERTY OF TATE SNYDER KIMSEY ARCHITECTS AND MAY NOT BE REPRODUCED OR USED FOR ANY PURPOSE WITHOUT THE ARCHITECTS WRITTEN CONSENT.
AS INSTRUMENTS OF SERVICE, THESE DOCUMENTS ARE NOT FINAL AND READY FOR USE, AND THEREFORE NOT VALID, UNLESS THEY ARE SEALED, SIGNED AND DATED.

Consultant

IMEG
4599 LONGLEY LANE
RENO, NV 89502
P: 775.828.4889
PROJECT #22007707.00
www.imegcorp.com

IMEG CORP. RESERVES PROPRIETARY RIGHTS, INCLUDING COPYRIGHTS, TO THIS DRAWING AND THE DATA SHOWN THEREON. SAID DRAWING AND/OR DATA ARE THE EXCLUSIVE PROPERTY OF IMEG CORP. AND SHALL NOT BE USED OR REPRODUCED FOR ANY OTHER PROJECT WITHOUT THE EXPRESS WRITTEN APPROVAL AND PARTICIPATION OF IMEG CORP. ©2022 IMEG CORP.

0 1 2 3
REF. SCALE IN INCHES PROJECT #22007707.00

PLEASE RECYCLE

Project
SPARKS FIRE STATION #6

6963 WINGFIELD HILLS ROAD,
SPARKS, NV 89436

Job No: 22-043

Owner
CITY OF SPARKS

CITY OF SPARKS FIRE DEPARTMENT Est. 1905

PROFESSIONAL ENGINEER - STATE OF NEVADA
KATHRYN CALLENDER
Exp: 12/31/2024
MECHANICAL
No. 026794
01/03/2024

BID SET

REVISIONS		
REV	DATE	DESCRIPTION

Sheet Title
HOOD SHOP DRAWINGS

Date: 01/04/2024
Sheet No:

M9.02

ELECTRICAL PACKAGE – JOB#5921144

NO	TAG	PACKAGE #	LOCATION	SWITCHES		OPTION	FANS CONTROLLED					
				LOCATION	QUANTITY		FAN TAG	TYPE	ϕ	HP	VOLT	FLA
1	ECP-1	SC-110110MA	UTILITY CABINET LEFT	UTILITY CABINET LEFT	1 LIGHT	SMART CONTROLS THERMOSTATIC CONTROL W/ RELAY ON/OFF WITH SUPPLY	KEF-1	EXHAUST	1	0.750	115	8.9
				HOOD # 1	1 FAN							

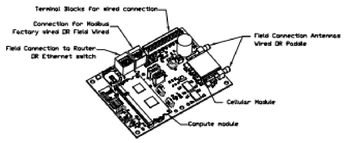

CASlink Monitor and Control

- Hood control panel to support communications to cloud-based Building Management System.
- Hood Control Panel to allow cloud-based Building Management System to monitor real time parameters outlined as MONITOR in the points list.
- Hood Control Panel to allow cloud-based Building Management System to control parameters outlined as CONTROL in the points list.
- Hood Control Panel to allow cloud-based Building Management System to implement SYSTEM ECONOMIZER control strategies for fully integrated Building Management.

MONITORING AND CONTROL POINTS LIST

DCV Packages	Function
Room Temperature	MONITOR
Duct Temperature(s)	MONITOR
MUA Discharge Temperature	MONITOR
Kitchen RTU Discharge Temperature	MONITOR
Fan Speed	MONITOR
Fan Amperage	MONITOR
Fan Power	MONITOR
VFD Faults	MONITOR
Controller Faults	MONITOR
Fan Faults	MONITOR
Fan Status	MONITOR
PCU Faults	MONITOR
PCU Filter Clog Percentages	MONITOR
Fire Condition	MONITOR
CORE Fire System	MONITOR
Building Pressure	MONITOR
Prep Time Button	MONITOR & CONTROL
Fans Button	MONITOR & CONTROL
Lights Button	MONITOR & CONTROL
Wash Button	MONITOR & CONTROL

DC Packages	Function
Room Temperature(s)	MONITOR
Duct Temperature(s)	MONITOR
MUA Discharge Temperature	MONITOR
Kitchen RTU Discharge Temperature	MONITOR
Controller Faults	MONITOR
Fan Faults	MONITOR
Fan Status	MONITOR
PCU Faults	MONITOR
PCU Filter Clog Percentages	MONITOR
Fire Condition	MONITOR
CORE Fire System	MONITOR
Building Pressure	MONITOR
Fans Button(s)	MONITOR & CONTROL
Lights Button(s)	MONITOR & CONTROL
Wash Button	MONITOR & CONTROL

JOB NO 5921144 | MODEL NUMBER SC-110110MA | JOB NAME Sparks Fire Station #6 R1 | DRAWN BY | DATE 3/24/2023 | SCHEMATIC TYPE INSTALL | DWG NO ECP #1-1

DESCRIPTION OF OPERATION: 120V 1 Phase w/ control for 1 Exhaust Fan, Exhaust on in Fire, Lights out in Fire, Relay On/Off with Supply Fan. Fantal On/Off Thermostatically Controlled. Room temperature sensor shipped loose for field installation.

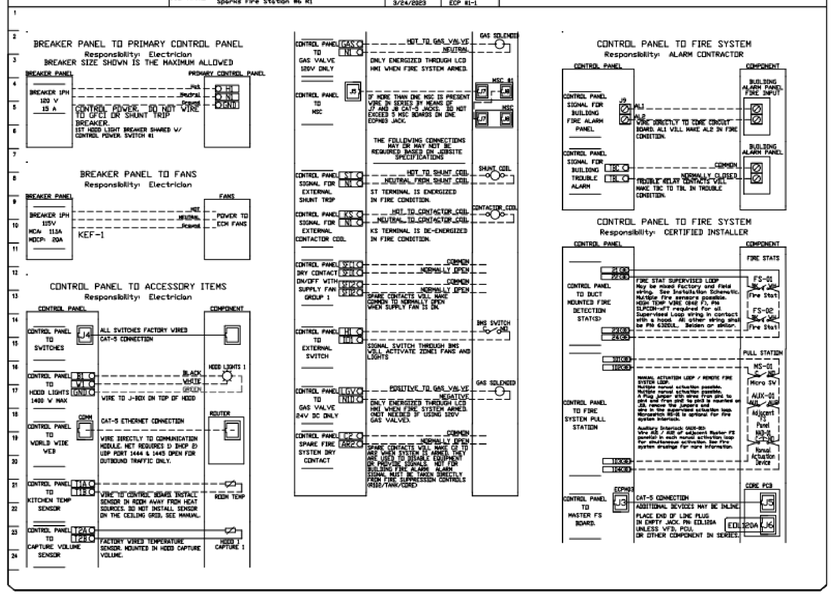

JOB NO 5921144 | MODEL NUMBER SC-110110MA | JOB NAME Sparks Fire Station #6 R1 | DRAWN BY | DATE 3/24/2023 | SCHEMATIC TYPE INSTALL | DWG NO ECP #1-2

DESCRIPTION OF OPERATION: 120V 1 Phase w/ control for 1 Exhaust Fan, Exhaust on in Fire, Lights out in Fire, Relay On/Off with Supply Fan. Fantal On/Off Thermostatically Controlled. Room temperature sensor shipped loose for field installation.

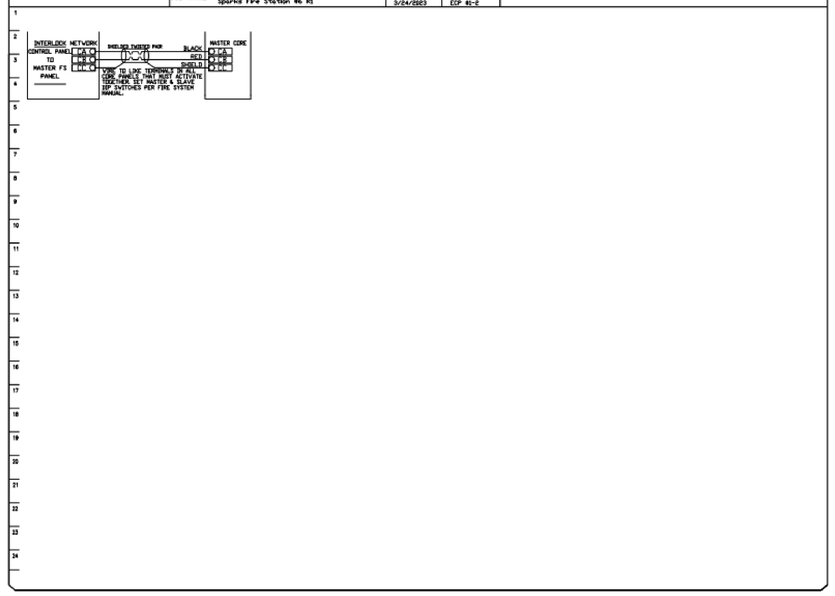

JOB NO 5921144 | MODEL NUMBER SC-110110MA | JOB NAME Sparks Fire Station #6 R1 | DRAWN BY | DATE 3/24/2023 | SCHEMATIC TYPE INSTALL | DWG NO ECP #1-3

DESCRIPTION OF OPERATION: Fire System #1 TANK FS - 48/48 (FS2-1).

TANK PROTECTION ELECTRICAL DETAIL

02/10/2021 Rev. 2

FS-1: MASTER

ELECTRICIAN:
1. WIRE MAIN CONTROL PANEL PER INCLUDED SCHEMATIC
2. WIRE ALL FANS PER INCLUDED SCHEMATIC
3. WIRE SHUNT TRIP BREAKER (OPTIONAL)
4. WIRE UDS APPLIANCE KILL SWITCH, IF EQUIPPED (OPTIONAL)
5. WIRE GAS VALVE

ELECTRICAL CONTRACTOR REQUIREMENT

ITEM	CONNECTION IN PANEL	CONNECTION IN DEVICE	VOLTAGE	AMPERAGE	COMMENTS
SHUNT TRIP BREAKER (OPTIONAL)	ST & N1	BREAKER COIL (X1 & X2)	120 VAC	< 4 AMPS	ST TO A1 ON SHUNT BREAKER COIL, AND NEUTRAL TO A2 ON SHUNT TRIP BREAKER COIL
CONTROL PANEL POWER	H1 & N1 + GROUND	CIRCUIT BREAKER	120 VAC	15 AMPS	CONTROL PANEL POWER MUST NOT BE RUN THROUGH SHUNT TRIP BREAKER
UDS APPLIANCE KILL SWITCH (OPTIONAL)	KTS & N1	KTS & N1	120 VAC	< 4 AMPS	KILL SWITCH TERMINALS MUST BE IN SERIES WITH OTHER KILL SWITCHES
REMOTE 120VAC ANSUL AUTOMAN (OPTIONAL)	AU1, AU2	SOLENOID	120 VAC	< 6 AMPS	120V TO AU1, AU2 TO ANSUL ELECTRIC AUTOMAN, ANSUL SOLENOID TO NEUTRAL
GAS VALVE	LGV & N13 (IF 24 VDC) GAS & N1 (IF 120 VAC)	RED/RED/GREEN	24 VDC OR 120 VAC	< 1.0 AMPS	IF 24 VDC - 2 WIRES & GROUND, N13 TO RED, LGV TO RED, AND GREEN TO GROUND IF 120 VAC - 2 WIRES & GROUND GAS TO RED, N1 TO RED, AND GREEN TO GROUND

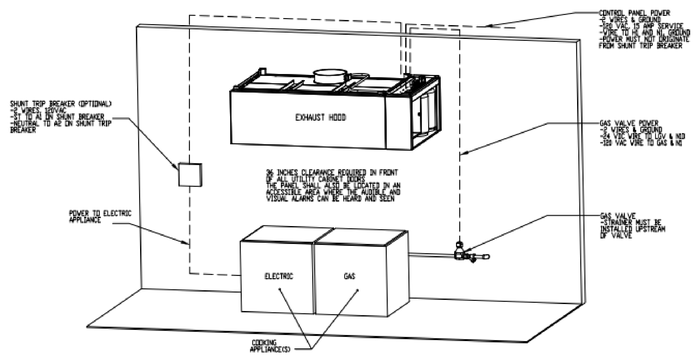

NOTE: SEE INSTALLATION, OPERATION, AND MAINTENANCE MANUAL FOR FURTHER INSTRUCTIONS

JOB NO 5921144 | MODEL NUMBER SC-110110MA | JOB NAME Sparks Fire Station #6 R1 | DRAWN BY | DATE 3/24/2023 | SCHEMATIC TYPE INSTALL | DWG NO ECP #1-4

DESCRIPTION OF OPERATION: Fire System #1 TANK FS - 48/48 (FS2-1).

TANK PROTECTION LOW-VOLTAGE DETAIL

02/10/2021 Rev. 2

FS-1: MASTER

ALARM CONTRACTOR:
1. WIRE MANUAL ACTUATION DEVICE(S), REMOTE FIRESTAT(S), CORE INTERLOCK(S), FIRE SENSOR(S) AND FIRE ALARM CONTACTS
2. COMPLETE FINAL HOOKUP OF SYSTEM
3. VERIFY FINAL FIRE SYSTEM TEST

ALARM CONTRACTOR REQUIREMENT

ITEM	CONNECTION IN PANEL	CONNECTION ON DEVICE	VOLTAGE	AMPERAGE	COMMENTS
MANUAL ACTUATION DEVICE(S)	101 AND 102 102 AND 103	1 & 2	24 VDC	< 1.0 AMPS	WIRE MANUAL ACTUATION DEVICE TERMINAL 1 BETWEEN CORE PANEL TERMINALS 102 AND 103 WIRE MANUAL ACTUATION DEVICE TERMINAL 2 BETWEEN CORE PANEL TERMINALS 103 AND 104 JUMPER 101 TO 104 AND 102 TO 103 IF NO MANUAL ACTUATION DEVICE IS INSTALLED
MANUAL ACTUATION DEVICE COVER	N/A	N/A	N/A	N/A	MANUAL ACTUATION DEVICE COVER MUST BE INSTALLED IF SIMPLEX MODELS, USE COVER EXTENDER STI-6018
REMOTE FIRESTAT SENSOR(S)	23 AND 24 22 AND 23	BLACK AND WHITE	24 VDC	< 1.0 AMPS	WIRE FIRE SENSOR WHITE WIRE BETWEEN HOOD CORE PANEL TERMINALS 22 AND 23 WIRE FIRE SENSOR BLACK WIRE BETWEEN HOOD CORE PANEL TERMINALS 23 AND 24 HIGH TEMP (#4GPC) #CV04427 (WHT) & #CV04428 (BLK)WIRE OR SIMILAR ONLY IF RAN OVER TOP OF HOOD. OTHERWISE 30-36 #6GOUL OR SIMILAR PLENUM RATED WIRE. SEE FIGURE 1
FIRE ALARM CONTACT	ALI, ALZ	VARIES	50V MAX (AC/DC)	UP TO 1 AMP	FIRE ALARM RELAY CONTACTS FOR BUILDING FIRE ALARM LOCATED IN THE CORE ELECTRICAL CONTROL PANEL
CORE INTERLOCK(S)	ILA, ILB, ILC	ILA, ILB, ILC	RS-485 COMMUNICATIONS SIGNAL		CORE SYSTEM (1) ILA, TO CORE SYSTEM (2) ILA CORE SYSTEM (1) ILB, TO CORE SYSTEM (2) ILB CORE SYSTEM (1) ILC, TO CORE SYSTEM (2) ILC USE BELDEN 88760 OR SIMILAR WIRE
TROUBLE CONTACT	TBC, TBL, TOK	VARIES	MAX 120 VAC	UP TO 6 AMPS	WIRE TO TBL & TBC NORMALLY OPEN CONTACT, CLOSES IN TROUBLE CONDITION
CORE COMMUNICATIONS CABLE	RJ-45 Jack	INTERNET CONNECTION	SIGNAL	<1.0 AMPS	TYPICAL CONNECTION CAT5 CABLE TO LOCAL AREA NETWORK VIA ETHERNET SWITCH OR WIRELESS ROUTER WITH VALID INTERNET CONNECTION

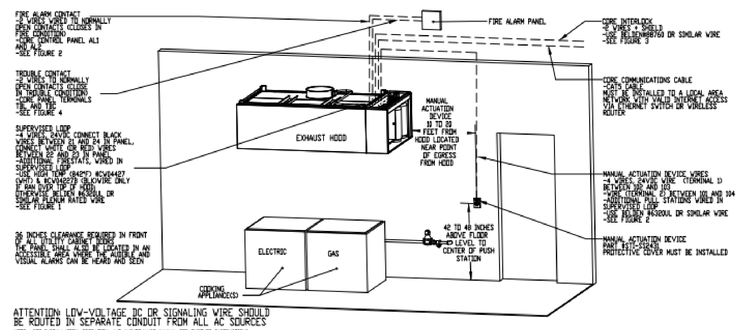

ATTENTION: LOW-VOLTAGE DC OR SIGNALING WIRE SHOULD BE ROUTED IN SEPARATE CONDUIT FROM ALL AC SOURCES

NOTE: SEE INSTALLATION, OPERATION, AND MAINTENANCE MANUAL FOR FURTHER INSTRUCTIONS

tsk
314 South Water Street,
Suite 100
Henderson, NV 89015
phone: 702.456.3000
fax: 702.898.6209
www.tska.com

THESE DRAWINGS AND SPECIFICATIONS ARE THE PROPERTY OF TATE SNYDER KIMSEY ARCHITECTS AND MAY NOT BE REPRODUCED OR USED FOR ANY PURPOSE WITHOUT THE ARCHITECTS WRITTEN CONSENT. AS INSTRUMENTS OF SERVICE, THESE DOCUMENTS ARE NOT FINAL AND READY FOR USE, AND THEREFORE NOT VALID, UNLESS THEY ARE SEALED, SIGNED AND DATED.

Consultant

IMEG
4599 LONGLEY LANE
RENO, NV 89502
P: 775.826.4599
PROJECT #22007707.00
www.imegcorp.com

IMEG CORP. RESERVES PROPRIETARY RIGHTS, INCLUDING COPYRIGHTS, TO THIS DRAWING AND THE DATA SHOWN THEREON. SAID DRAWING AND/OR DATA ARE THE EXCLUSIVE PROPERTY OF IMEG CORP. AND SHALL NOT BE USED OR REPRODUCED FOR ANY OTHER PROJECT WITHOUT THE EXPRESS WRITTEN APPROVAL AND PARTICIPATION OF IMEG CORP. ©2022 IMEG CORP.

REF. SCALE IN INCHES 0 1 2 3 | PROJECT #22007707.00

PLEASE RECYCLE

Project
SPARKS FIRE STATION #6

6963 WINGFIELD HILLS ROAD, SPARKS, NV 89436

Job No: 22-043

Owner
CITY OF SPARKS

PROFESSIONAL ENGINEER-STATE OF NEVADA
KATHY L. CALLENDER
Exp:12/31/2024
MECHANICAL
No. 026794
01/03/2024

BID SET

REVISIONS

REV	DATE	DESCRIPTION

Sheet Title
HOOD SHOP DRAWINGS

Date: 01/04/2024
Sheet No:
M9.03

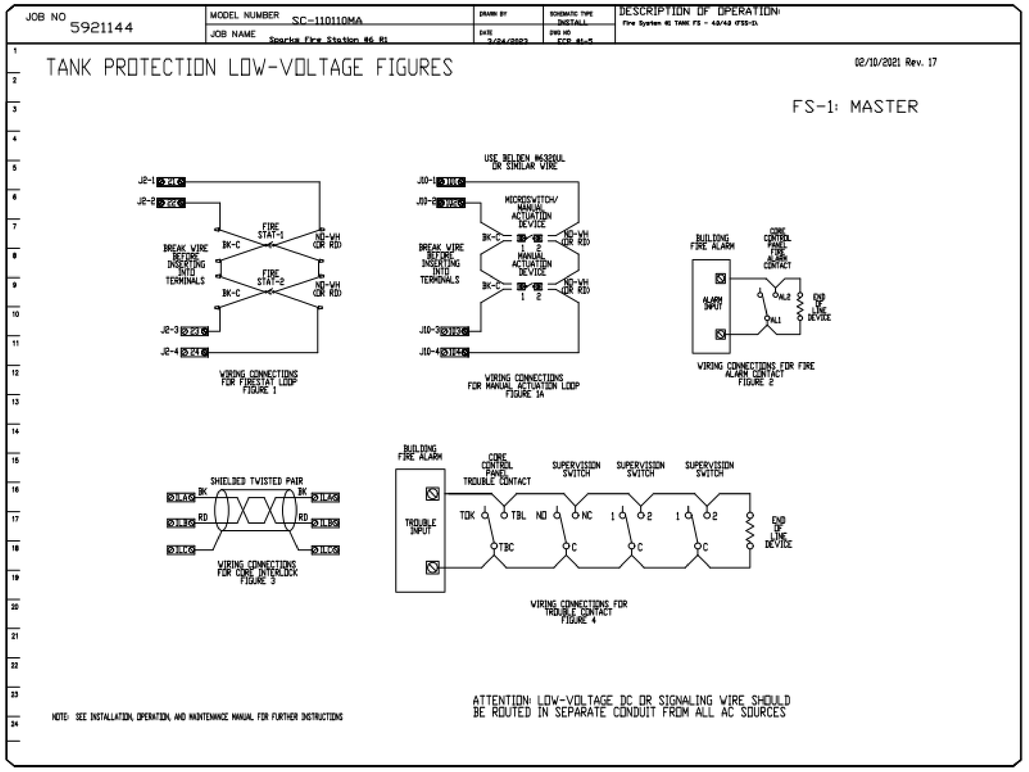

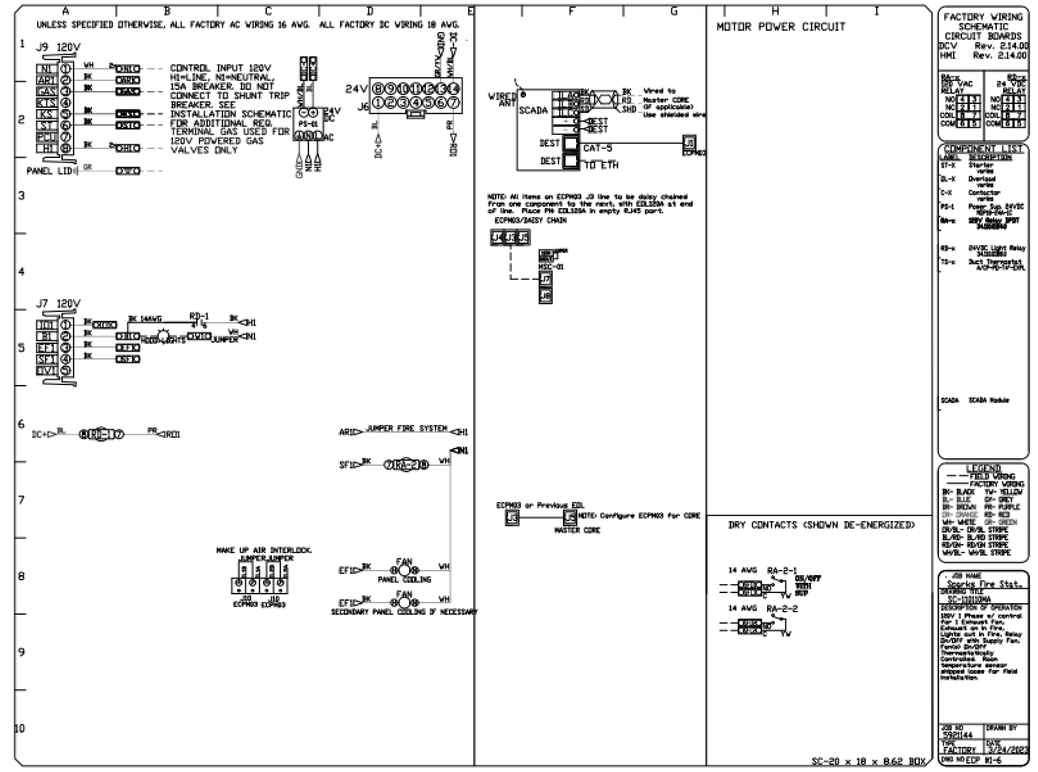

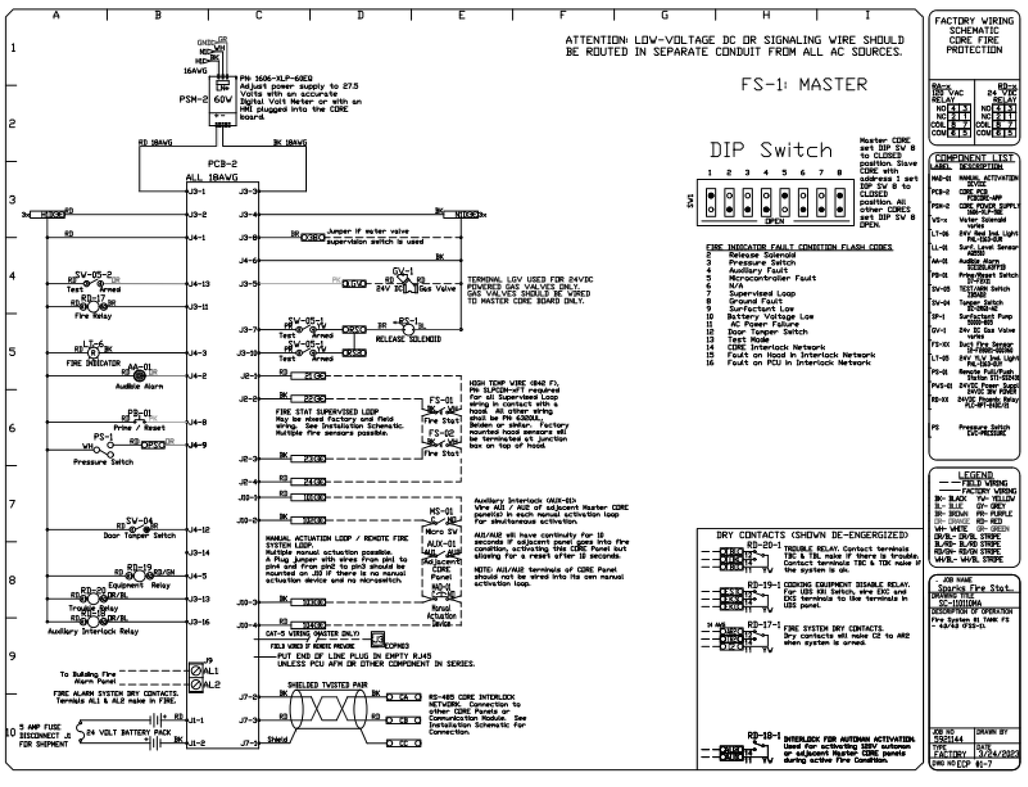

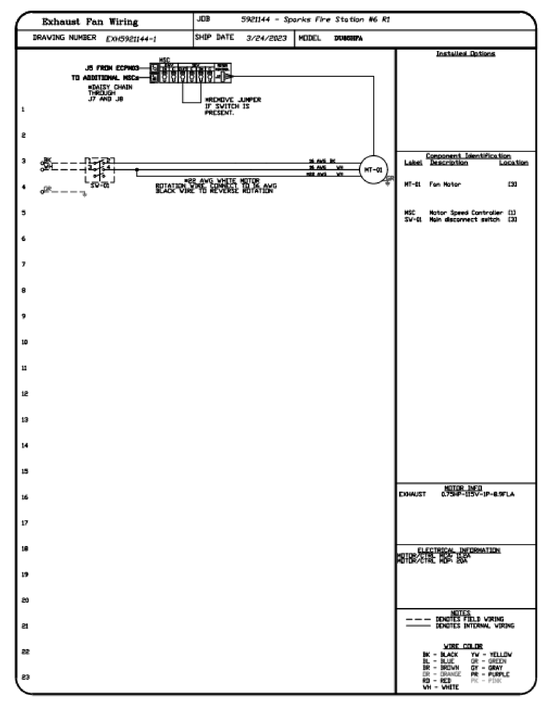

tsk
314 South Water Street,
Suite 100
Henderson, NV 89015
phone: 702.456.3000
fax: 702.898.6209
www.tska.com

THESE DRAWINGS AND SPECIFICATIONS ARE THE PROPERTY OF TATE SNYDER KIMSEY ARCHITECTS AND MAY NOT BE REPRODUCED OR USED FOR ANY PURPOSE WITHOUT THE ARCHITECTS WRITTEN CONSENT. AS INSTRUMENTS OF SERVICE, THESE DOCUMENTS ARE NOT FINAL AND READY FOR USE, AND THEREFORE NOT VALID, UNLESS THEY ARE SEALED, SIGNED AND DATED.

Consultant

IMEG
4599 LONGLEY LANE
RENO, NV 89502
P: 775.826.4599
PROJECT #22007707.00
www.imeg.com

IMEG CORP. RESERVES PROPRIETARY RIGHTS, INCLUDING COPYRIGHTS, TO THIS DRAWING AND THE DATA SHOWN THEREON. SAID DRAWING AND/OR DATA ARE THE EXCLUSIVE PROPERTY OF IMEG CORP. AND SHALL NOT BE USED OR REPRODUCED FOR ANY OTHER PROJECT WITHOUT THE EXPRESS WRITTEN APPROVAL AND PARTICIPATION OF IMEG CORP. ©2022 IMEG CORP.

REF. SCALE IN INCHES 0 1 2 3 — PROJECT #22007707.00

PLEASE RECYCLE

Project

SPARKS FIRE STATION #6

6963 WINGFIELD HILLS ROAD, SPARKS, NV 89436

Job No: 22-043

Owner

CITY OF SPARKS

CITY OF SPARKS FIRE DEPARTMENT Est. 1905

PROFESSIONAL ENGINEER - STATE OF NEVADA
KATHRYN BALLENDER
Exp: 12/31/2024
MECHANICAL
No. 026794
01/03/2024

BID SET

REVISIONS		
REV	DATE	DESCRIPTION

Sheet Title

HOOD SHOP DRAWINGS

Date: 01/04/2024

Sheet No:

M9.04

VIEW KEY

NAME — LEVEL NAME
10'-0" — HEIGHT ABOVE PROJECT 0'-0"

(1) — INDICATES NOTE USED TO DESCRIBE ADDITIONAL INFORMATION ABOUT WORK REQUIRED, SPECIFIC TO THE SHEET AND/OR DETAIL

INDICATES DIRECTION OF TRUE NORTH
PLAN OR DETAIL NUMBER
PLAN OR DETAIL NAME

NORTH (1) **VIEW NAME**
1/8" = 1'-0"
PLAN OR DETAIL SCALE

SIM — INDICATES SIMILAR DETAIL REFERENCED IN MULTIPLE LOCATIONS — SIM
1 — DETAIL REFERRED TO BY SECTION CUT — 1 2 3 4
M101 — SHEET DETAIL IS LOCATED ON — T101

LINE TYPE AND TAG KEY:

NEW WORK BY THIS CONTRACTOR (WIDE LINE)
NEW
EXISTING TO BE REMOVED (SHORT DASHED PATTERN)
NEW UNDERFLOOR OR UNDERGROUND (LONG DASHED PATTERN)

EXISTING TO REMAIN OR WORK BY OTHERS (NARROW LINE)
EXISTING
EXISTING TO BE REMOVED BY OTHERS (SHORT DASHED PATTERN)
EXISTING UNDERFLOOR OR UNDERGROUND (LONG DASHED PATTERN)

HALFTONING DOES NOT MODIFY SCOPE.

'TAG'-E — TAGS WITH DASH 'E' INDICATES THE REFERENCED OBJECT IS EXISTING

TAG — UNDERLINED TAG INDICATES OBJECT IS IN-SCOPE. IF NEW, ADDITIONAL INFORMATION IS AVAILABLE IN A SCHEDULE, MATERIAL LIST, OR SYMBOL LIST

INDICATES AN EXISTING SYSTEM'S POINT OF CONNECTION/REMOVAL

FIRE / SMOKE BARRIER DESIGNATIONS

THE CONTRACTOR SHALL VERIFY RATINGS WITH THE LATEST SET OF ARCHITECTURAL PLANS AND FURNISH ALL MATERIALS REQUIRED TO COMPLY WITH THOSE RATINGS WHETHER SHOWN OR NOT.

APPLICABLE CODES

CONTRACTOR SHALL COMPLY WITH APPLICABLE CODES AND LOCAL AMENDMENTS.

BUILDING CODE:	IBC 2018 EDITION
FIRE CODE:	IFC 2018 EDITION
PLUMBING CODE:	UPC 2018 EDITION
MECHANICAL CODE:	UMC 2018 EDITION
ELECTRICAL CODE:	NFPA 70 (NEC) 2017 EDITION
LIFE SAFETY CODE:	NFPA 101 2017 EDITION
ENERGY CONSERVATION CODE:	IECC 2018
HEALTH DEPARTMENT CODE:	CURRENT EDITION
LOCAL BUILDING CODE:	CURRENT EDITION

PLUMBING SYMBOL LIST

NOT ALL SYMBOLS MAY APPLY.

SYMBOL:	DESCRIPTION:
AV	ACID VENT
AW	ACID WASTE
CA	COMPRESSED AIR
CW	COLD WATER - POTABLE
D	DRAIN
DI	DEIONIZED WATER
DT	DRAIN TILE
FOR	FUEL OIL RETURN
FOS	FUEL OIL SUPPLY
G	NATURAL GAS
GRV	GAS REGULATOR VENT
GSAN	SANITARY DRAINAGE (GREASE SANITARY DRAINAGE)
GV	GREASE VENT
HW	HOT WATER - POTABLE
HWC	HOT WATER CIRCULATING - POTABLE
HW140	HOT WATER - POTABLE NUMBER INDICATES TEMP
HWC140	HOT WATER CIRC. - POTABLE NUMBER INDICATES TEMP
IA	INSTRUMENT AIR
MA	MEDICAL AIR
MPG	MEDIUM PRESSURE GAS
MV	MEDICAL VACUUM
N	NITROGEN
NCW	NON-POTABLE COLD WATER
NHW	NON-POTABLE HOT WATER
NO	NITROUS OXIDE
O	OXYGEN
P	PROPANE GAS
PD	PUMPED DISCHARGE
PW	PURE WATER
RO	REVERSE OSMOSIS WATER
SAN	SANITARY DRAINAGE
SCW	SOFT COLD WATER
SHW	SOFT HOT WATER
ST(1,000)	STORM DRAINAGE (ROOF SQUARE FOOTAGE)
STS	STORM DRAINAGE (SECONDARY)
STW	SOFT TEMPERED WATER
TW	TEMPERED WATER
V	VENT
VAC	LAB VACUUM
W	SERVICE WATER - POTABLE
WAGD	WASTE ANETHESIA GAS DISPOSAL
	PIPE CONTINUATION
	PIPE CAP
	PIPE DOWN
	PIPE UP OR UP/DOWN
FD	PIPE SERVING FIXTURE ON FLOOR ABOVE (EXAMPLE: FD = FLOOR DRAIN)
	PITCH PIPE IN DIRECTION
	DIRECTION OF FLOW IN PIPE
	ROUTE TO DRAIN
RD-1 6"(1000)	ROOF DRAIN PROPERTIES SYMBOL / SIZE (ROOF SQ. FT.)
	DIELECTRIC CONNECTION
	UNION/FLANGE
	SHUTOFF VALVE NORMALLY OPEN
	SHUTOFF VALVE NORMALLY CLOSED
GPM	BALANCING VALVE (NUMBER INDICATES GPM)
	CHECK VALVE
	BACKFLOW PREVENTER
	SOLENOID VALVE
	SAFETY/RELIEF VALVE
	VACUUM BREAKER
P	PRESSURE GAUGE (FURNISHED WITH BALL VALVE)
P	PRESSURE SENSOR (FURNISHED WITH BALL VALVE)
T	TEMPERATURE SENSOR WITH WELL
T	THERMOMETER WITH WELL (DIAL TYPE)
	THERMOMETER WITH WELL (FILLED TYPE)
	REDUCER - REFERENCE SPECIFICATION FOR CONCENTRIC/ECCENTRIC AND FOT/FOB
	PRESSURE REDUCING VALVE (LIQUID/GAS)
	PUMP
M	METER
	ALIGNMENT GUIDE
	PIPE ANCHOR
EJ-# (#.#")	EXPANSION JOINT #.#" IS THE EXPANSION TRAVEL INCHES
	AIR ADMITTANCE VALVE

PLUMBING ABBREVIATION KEY

ABBR:	DESCRIPTION:
AD	ACCESS DOOR
AFF	ABOVE FINISHED FLOOR
BFP	BACKFLOW PREVENTER
BT	BATHTUB
CB	CATCH BASIN
CI	CAST IRON
CO	CLEANOUT
CS	CLINICAL SINK
DB	DIALYSIS BOX
DF	DRINKING FOUNTAIN
DI	DUCTILE IRON
E	EXISTING
EE	EMERGENCY EYEWASH
ES	EMERGENCY SHOWER
ESE	EMERGENCY SHOWER/EYEWASH
EWC	ELECTRIC WATER COOLER
FCO	FLOOR CLEANOUT
FD	FLOOR DRAIN
FM	FLOW METER
FS	FLOOR SINK
GD	GARBAGE DISPOSER
GI	GREASE INTERCEPTOR
HB	HOSE BIBB
I.E.	INVERT ELEVATION (FOR REFERENCE ONLY)
LAV	LAVATORY
MB	MOP BASIN
MH	MANHOLE
MV	MIXING VALVE
NIC	NOT IN CONTRACT
NT	NEUTRALIZATION TANK
OS	OIL SEPARATOR
RD	ROOF DRAIN
SCCR	SHORT CIRCUIT CURRENT RATING
SH	SHOWER
SK	SINK
SS	SERVICE SINK
TD	TRENCH DRAIN
TP	TRAP PRIMER
TYP	TYPICAL
UR	URINAL
VTR	VENT THROUGH ROOF
WC	WATER CLOSET
WCO	WALL CLEANOUT
WF	WASH FOUNTAIN
WH	WATER HEATER
WMF	WASHING MACHINE FIXTURE
WM	WATER METER
WS	WATER SOFTENER
UB	UTILITY BOX
UON	UNLESS OTHERWISE NOTES
YCO	YARD CLEANOUT

PLUMBING GENERAL NOTES:

1. THE SYMBOLS AND THE MATERIAL LIST ARE FOR THE CONVENIENCE OF THE CONTRACTOR. CONTRACTOR SHALL VERIFY QUANTITIES AND FURNISH ALL MATERIALS REQUIRED FOR FULLY OPERATIONAL SYSTEMS, WHETHER SPECIFIED OR NOT.
2. CATALOG NUMBERS SHALL NOT BE CONSIDERED COMPLETE, BUT ARE GIVEN AS AN AID TO THE CONTRACTOR AND TO INDICATE THE QUALITY REQUIRED. CONTRACTOR IS RESPONSIBLE FOR A COMPLETE DESCRIPTION OF MATERIAL ON THESE DRAWINGS AND IN THE SPECIFICATIONS BEFORE ORDERING. THE DESCRIPTION OF THE MATERIAL TAKES PRECEDENCE OVER THE CATALOG NUMBER. THE FIRST MANUFACTURER LISTED IS THE BASIS OF DESIGN.
3. CONTRACTOR SHALL VERIFY THAT FIXTURES SUPPLIED ARE APPROVED PER ALL APPLICABLE STATE, LOCAL AND GOVERNING AUTHORITIES.
4. ALL FIXTURES SHALL CONFORM TO FEDERAL ACT S.3874
5. INVERT ELEVATIONS ARE FROM EXISTING DRAWINGS AND MAY NOT BE ACCURATE. VERIFY ALL ELEVATIONS BEFORE BEGINNING WORK.
6. VERIFY UNDERGROUND PIPE SIZES, INVERT ELEVATIONS, AND LOCATIONS PRIOR TO BEGINNING ANY WORK.
7. REFER TO THE PLUMBING ROUGH-IN SCHEDULE FOR THE SIZES OF BRANCH PIPES TO PLUMBING FIXTURES.
8. FOR CLARITY, NOT ALL VALVES HAVE BEEN SHOWN. PROVIDE SHUTOFF VALVES IN DOMESTIC WATER PIPING SERVING EACH ROOM WITH FIXTURES. ANGLE STOPS SHALL NOT BE CONSIDERED SHUTOFF VALVES.
9. PIPE ALL CONDENSATE DRAIN LINES FROM EQUIPMENT TO NEAREST APPROVED SANITARY FIXTURE. CONDENSATE DRAIN PIPE SIZE TO MATCH EQUIPMENT DRAIN CONNECTION SIZE. CONDENSATE DRAINS TO SLOPE DOWN TORWARD THE APPROVED SANITARY FIXTURE AT MINIMUM 1/4" PER FOOT.
10. ALL CLEANOUTS TO BE INSTALLED PER 2018 UPC, SECTION 707.4.

1

MECHANICAL GENERAL NOTES:

THESE NOTES APPLY TO ALL MECHANICAL SHEETS AND TRADES, INCLUDING BUT NOT LIMITED TO, FIRE PROTECTION, PLUMBING, MEDICAL GAS, VENTILATION, PIPING AND TEMPERATURE CONTROL.

1. DRAWINGS SHOWING LOCATIONS OF EQUIPMENT, DUCTWORK, PIPING, ETC. ARE DIAGRAMMATIC AND MAY NOT ALWAYS REFLECT EXACT INSTALLATION CONDITIONS. DRAWINGS SHOW THE GENERAL ARRANGEMENT OF DUCTWORK, PIPING, EQUIPMENT, ETC., AND MAY NOT INCLUDE ALL OFFSETS AND FITTINGS REQUIRED FOR COMPLETE INSTALLATION. THE DRAWINGS SHALL BE FOLLOWED AS CLOSELY AS ACTUAL BUILDING CONSTRUCTION AND THE WORK OF OTHERS WILL PERMIT.
2. DO NOT SCALE DRAWINGS. VERIFY ALL DIMENSIONS AND CLEARANCES FROM ARCHITECTURAL, STRUCTURAL, SUBMITTALS, AND OTHER APPROPRIATE DRAWINGS OR PHYSICALLY AT SITE. REVIEW ALL DRAWINGS, INCLUDING THOSE OF OTHER TRADES.
3. COORDINATE ALL WORK WITH ALL OTHER TRADES PRIOR TO INSTALLATION TO PROVIDE CLEARANCES REQUIRED FOR OPERATION, MAINTENANCE, CODE COMPLIANCE, AND TO VERIFY NON-INTERFERENCE WITH OTHER WORK. DO NOT FABRICATE PRIOR TO VERIFICATION OF NECESSARY CLEARANCES FOR ALL TRADES. BRING ANY INTERFERENCES OR CONFLICTS TO THE ATTENTION OF THE ARCHITECT/ENGINEER BEFORE PROCEEDING WITH FABRICATION OR EQUIPMENT ORDERS.
4. REVIEW SPACE REQUIREMENTS OF EQUIPMENT SPECIFIED OR SUBSTITUTED AND MAKE REASONABLE ACCOMMODATIONS IN LAYOUT AND POSITIONING TO PROVIDE PROPER ACCESS.
5. ANY CHANGES REQUIRED TO ELIMINATE CONFLICTS OR THAT RESULT FROM A FAILURE TO COORDINATE SHALL BE MADE BY THE CONTRACTOR WITHOUT ADDITIONAL COST OR EXPENSE TO OTHERS.
6. EACH CONTRACTOR IS RESPONSIBLE FOR ALL COSTS ASSOCIATED WITH ELECTRICAL CHANGES REQUIRED FOR EQUIPMENT PROPOSED THAT DIFFERS FROM THE BASIS OF DESIGN.
7. REFER TO ARCHITECTURAL REFLECTED CEILING PLAN, ELECTRICAL, TECHNOLOGY AUDIO/VISUAL, AND OTHER MECHANICAL PLANS FOR EXACT LOCATIONS OF ALL CEILING MOUNTED DEVICES, OTHER THAN SPRINKLERS.
8. EACH CONTRACTOR IS RESPONSIBLE FOR DAMAGE CAUSED BY THEIR ACTIONS TO WALLS, FLOORS, CEILINGS, AND ROOFS. THE CONTRACTOR WHOSE WORK CAUSES DAMAGE IS RESPONSIBLE FOR PATCHING TO MATCH ORIGINAL CONSTRUCTION, FIRE RATING, AND FINISH. IN AREAS WITH DRYWALL CEILINGS COORDINATE LOCATIONS OF ACCESS PANELS WITH THE GC FOR ACCESS TO VALVES, DUCTWORK ACCESSORIES, DAMPERS, ETC. COORDINATE PANEL TYPE AND COLOR WITH ARCHITECT. NOTIFY THE GC OF THE REQUIRED ACCESS PANELS PRIOR TO BIDDING.
9. SEAL ALL FLOOR, WALL, AND ROOF PENETRATIONS AIRTIGHT WHERE CONDUITS, PIPING, AND DUCTS PENETRATE. PENETRATIONS THROUGH EXTERIOR WALLS AND ROOF SHALL BE SEALED AIRTIGHT WITH WATERPROOFING MATERIALS RECOMMENDED BY MANUFACTURER FOR OUTDOOR USE.
10. CAULK ALL PIPE AND DUCT PENETRATIONS OF FULL HEIGHT NON-FIRE RATED WALL, PARTITION, FLOOR, AND ROOF ASSEMBLIES. THIS IS ESSENTIAL TO PREVENT NOISE TRANSMISSION FROM ONE ROOM TO ANOTHER AND TO PROVIDE THE DESIRED NC LEVELS WITHIN ROOMS.
11. WHERE PIPES AND DUCTS ARE SHOWN TO PENETRATE FLOORS, PROVIDE SLEEVED OPENINGS WITH THE TOP EDGE RAISED ABOVE FLOOR SURFACE IN ACCORDANCE WITH ALL RELEVANT SPEC SECTIONS. SEAL SLEEVE PERIMETER TO BE WATERTIGHT.
12. EQUIPMENT SIZES AND SERVICE CLEARANCE REQUIREMENTS VARY AMONG DIFFERENT MANUFACTURERS. CONSULT APPROVED SHOP DRAWINGS FOR EQUIPMENT SIZES AND REQUIRED SERVICE CLEARANCES. COORDINATE WITH LAYOUT OF EQUIPMENT PADS, PIPING, DUCTWORK, ETC.
13. DO NOT BLOCK TUBE PULL OR EQUIPMENT SERVICE CLEARANCES.
14. MAINTAIN A MINIMUM WORKING CLEARANCE OF 3'-6" IN FRONT OF ALL ELECTRICAL EQUIPMENT REQUIRING MAINTENANCE, INSPECTION, AND TESTING INCLUDING BUT NOT LIMITED TO PANELS, DISTRIBUTION PANELS, SWITCHBOARDS, MOTOR CONTROL CENTERS, TRANSFORMERS, EQUIPMENT DISCONNECTS AND STARTERS.
15. MAINTAIN THE DEDICATED ELECTRICAL EQUIPMENT SPACE DEFINED BY THE WIDTH / DEPTH OF ELECTRICAL EQUIPMENT MEASURED FROM THE FLOOR TO A HEIGHT 6'-0" ABOVE THE EQUIPMENT OR THE STRUCTURAL CEILING, WHICHEVER IS LOWER. SYSTEMS FOREIGN TO THE ELECTRICAL DISTRIBUTION SYSTEM ARE NOT ALLOWED IN THE DEDICATED ELECTRICAL SPACE INCLUDING; DUCTWORK, PIPING, ETC.
16. PROVIDE CONCRETE EQUIPMENT PAD FOR ALL FLOOR MOUNTED EQUIPMENT. PAD SHALL EXTEND MINIMUM 6" BEYOND ALL SIDES OF EQUIPMENT.
17. DO NOT SUPPORT EQUIPMENT, PIPING, OR DUCTWORK FROM METAL DECKING OR OTHER NON-STRUCTURAL BUILDING ELEMENTS. ANCHORS EMBEDDED IN CONCRETE SHALL BE CRACKED CONCRETE APPROVED IN ACCORDANCE WITH SPECIFICATIONS.

1

PROJECT ALTITUDE:	5,000.00 FT. ABOVE SEA LEVEL

PLUMBING SLOPE REQUIREMENTS:

BASED ON PLUMBING CODE: UPC-2018

INTERIOR:	
SANITARY WASTE:	1/4" PER FOOT
GREASE WASTE:	1/4" PER FOOT
STORM (GRAVITY):	1/8" PER FOOT
CONDENSATE AND INDIRECT DRAINAGE:	1/8" PER FOOT
SANITARY AND GREASE VENT:	NO SPECIFIC PITCH, PITCH TO FIXTURES
DOMESTIC WATER:	NO SPECIFIC PITCH, PITCH TO FIXTURES

PLUMBING SHEET INDEX

P0.00	PLUMBING COVERSHEET
P0.10	PLUMBING DIAGRAMS
P0.11	PLUMBING DIAGRAMS
P0.12	PLUMBING DIAGRAMS
P0.20	PLUMBING SCHEDULES
P2.00	OVERALL FLOOR PLAN - WASTE & VENT
P2.10	OVERALL FLOOR PLAN - WATER & GAS
P3.00	OVERALL ROOF PLAN - PLUMBING
GRAND TOTAL: 8	

tsk

314 South Water Street,
Suite 100
Henderson, NV 89015
phone: 702.456.3000
fax: 702.898.6209
www.tska.com

THESE DRAWINGS AND SPECIFICATIONS ARE THE PROPERTY OF TATE SNYDER KIMSEY ARCHITECTS AND MAY NOT BE REPRODUCED OR USED FOR ANY PURPOSE WITHOUT THE ARCHITECTS WRITTEN CONSENT.
AS INSTRUMENTS OF SERVICE, THESE DOCUMENTS ARE NOT FINAL AND READY FOR USE, AND THEREFORE NOT VALID, UNLESS THEY ARE SEALED, SIGNED AND DATED.

Consultant

IMEG
4599 LONGLEY LANE
RENO, NV 89502
P: 775.828.4889
PROJECT #22007707.00
www.imegcorp.com

IMEG CORP. RESERVES PROPRIETARY RIGHTS, INCLUDING COPYRIGHTS, TO THIS DRAWING AND THE DATA SHOWN THEREON. SAID DRAWING AND/OR DATA ARE THE EXCLUSIVE PROPERTY OF IMEG CORP. AND SHALL NOT BE USED OR REPRODUCED FOR ANY OTHER PROJECT WITHOUT THE EXPRESS WRITTEN APPROVAL AND PARTICIPATION OF IMEG CORP. ©2022 IMEG CORP.

0 1 2 3
REF. SCALE IN INCHES — PROJECT #22007707.00

PLEASE RECYCLE

Project
SPARKS FIRE STATION #6

6963 WINGFIELD HILLS ROAD, SPARKS, NV 89436

Job No: 22-043

Owner
CITY OF SPARKS

CITY OF SPARKS FIRE DEPARTMENT Est. 1905

PROFESSIONAL ENGINEER - STATE OF NEVADA
KATHRYN CALLENDER
Exp: 12/31/2024
MECHANICAL
No. 026794
01/03/2024

BID SET

REVISIONS		
REV	DATE	DESCRIPTION
1	05/31/23	Plan Check Responses

Sheet Title
PLUMBING COVERSHEET

Date: 01/04/2024
Sheet No:

P0.00

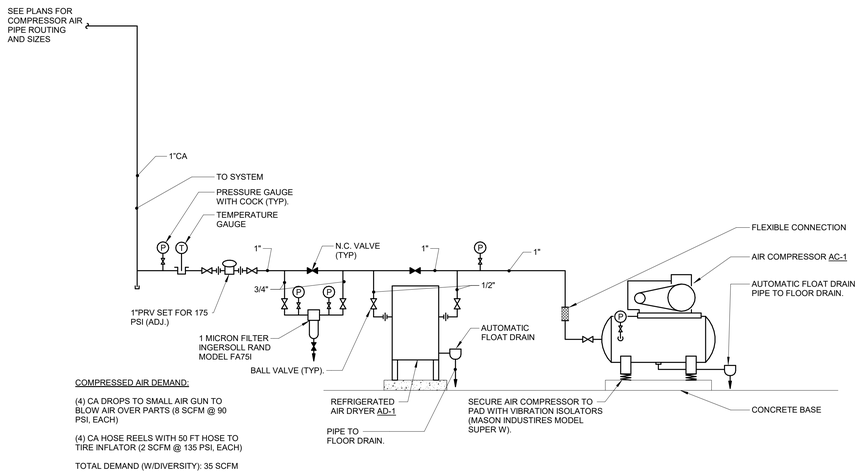

1 COMPRESSED AIR - FLOW DIAGRAM
NO SCALE

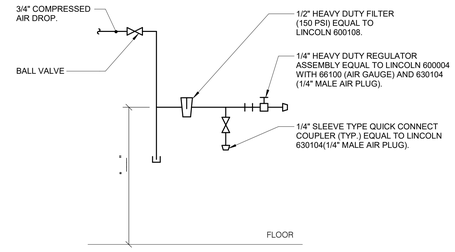

2 COMPRESSED AIR - TERMINAL
NO SCALE

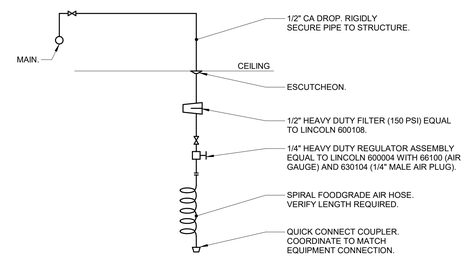

3 COMPRESSED AIR - TERMINAL AT CEILING
NO SCALE

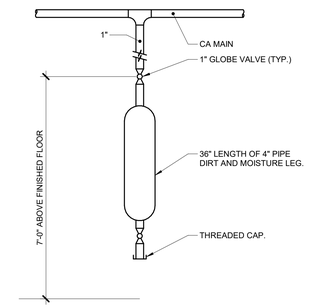

4 COMPRESSOR AIR - MAIN DRAIN
NO SCALE

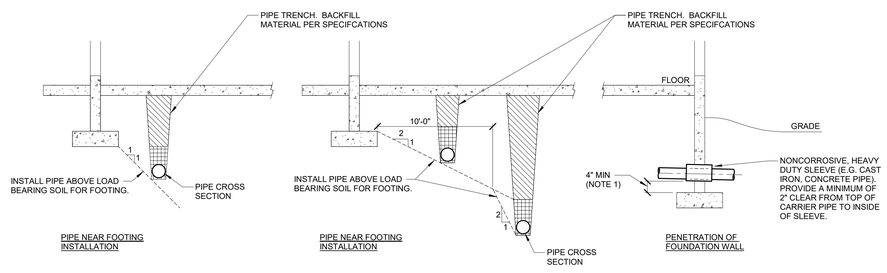

NOTES:

1. STEP FOOTING DOWN AS REQUIRED TO MAINTAIN MINIMUM DIMENSION.

5 PIPE UNDERFLOOR TRENCH AND EXCAVATION/BACKFILL DETAIL
NO SCALE

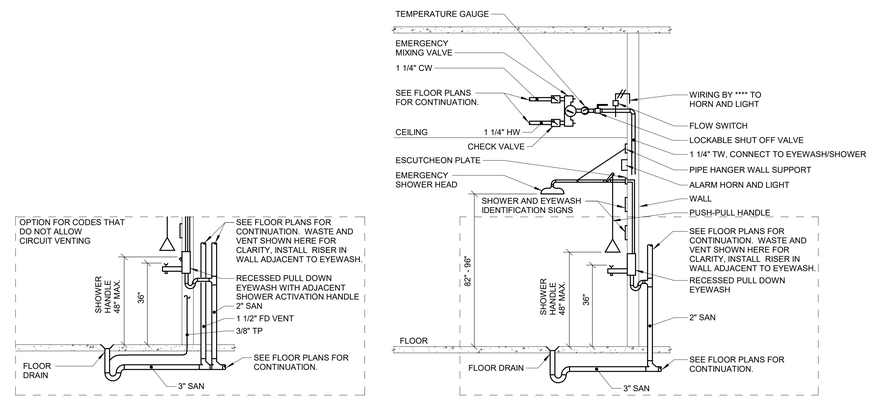

NOTES:

1. EYEWASH AND SHOWER PERFORMANCE AND ROUGH-IN SHALL MEET THE CURRENT VERSION OF ANSI Z358.1.

6 EMERGENCY SHOWER & EYEWASH - RECESSED WALL
NO SCALE

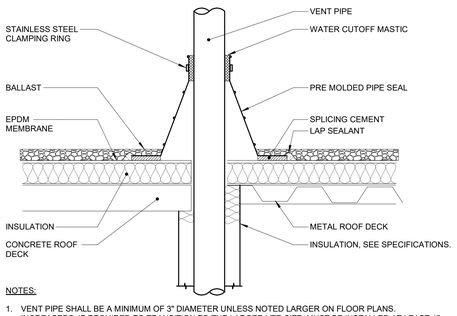

NOTES:

1. VENT PIPE SHALL BE A MINIMUM OF 3" DIAMETER UNLESS NOTED LARGER ON FLOOR PLANS. INCREASERS, IF REQUIRED TO TRANSITION TO THE LARGER VTR SIZE, MUST BE INSTALLED AT LEAST 12 INCHES BELOW THE THERMAL ENVELOPE OF THE BUILDING.
2. EXTEND VENT PIPE AT LEAST 7 FEET ABOVE ROOF LEVEL WHEN ROOF AREA IS INTENDED TO BE USED BY THE GENERAL PUBLIC. THIS INCLUDES PROMENADES, OBSERVATION DECKS, ETC. THIS IS NOT REQUIRED FOR ROOFS THAT ARE ACCESSIBLE BY MAINTENANCE PERSONEL ONLY.

7 VENT PIPE FLASHING
NO SCALE

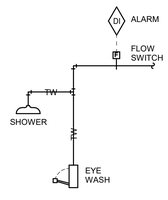

ALARMS, INTERLOCKS & SAFETIES:
FMCS SHALL INDICATE AN ALARM TO THE FMCS OPERATOR WORKSTATION IN THE EVENT THE FLOW SWITCH DETECTS FLOW.

FMCS SHALL MONITOR AND RECORD EACH OPERATION.

8 EMERGENCY SHOWER/EYEWASH MONITORING
NO SCALE

tsk
314 South Water Street,
Suite 100
Henderson, NV 89015
phone: 702.456.3000
fax: 702.898.6209
www.tska.com

THESE DRAWINGS AND SPECIFICATIONS ARE THE PROPERTY OF TATE SNYDER KIMSEY ARCHITECTS AND MAY NOT BE REPRODUCED OR USED FOR ANY PURPOSE WITHOUT THE ARCHITECTS WRITTEN CONSENT. AS INSTRUMENTS OF SERVICE, THESE DOCUMENTS ARE NOT FINAL AND READY FOR USE, AND THEREFORE NOT VALID, UNLESS THEY ARE SEALED, SIGNED AND DATED.

Consultant

IMEG
4599 LONGLEY LANE
RENO, NV 89502
P: 775.828.4899
PROJECT #22007707.00
www.imegcorp.com

IMEG CORP. RESERVES PROPRIETARY RIGHTS, INCLUDING COPYRIGHTS, TO THIS DRAWING AND THE DATA SHOWN THEREON. SAID DRAWING AND/OR DATA ARE THE EXCLUSIVE PROPERTY OF IMEG CORP. AND SHALL NOT BE USED OR REPRODUCED FOR ANY OTHER PROJECT WITHOUT THE EXPRESS WRITTEN APPROVAL AND PARTICIPATION OF IMEG CORP. ©2022 IMEG CORP.

0 1 2 3
REF. SCALE IN INCHES PROJECT #22007707.00

PLEASE RECYCLE

Project
SPARKS FIRE STATION #6

6963 WINGFIELD HILLS ROAD, SPARKS, NV 89436

Job No: 22-043

Owner
CITY OF SPARKS

PROFESSIONAL ENGINEER - STATE OF NEVADA
KATHRYN DALLENDER
Exp:12/31/2024
MECHANICAL
No. 026794
01/03/2024

BID SET

REVISIONS		
REV	DATE	DESCRIPTION

Sheet Title
PLUMBING DIAGRAMS

Date: 01/04/2024
Sheet No:
P0.10

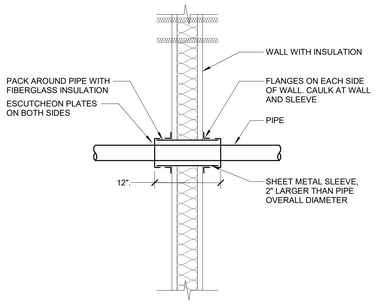

NOTES:

1. THIS DETAIL APPLIES TO ALL PIPES. THE INTENTIONS ARE TO CONTINUE THE INSULATION AND VAPOR BARRIER THROUGH ALL PENETRATIONS, PERMIT THERMAL EXPANSION WITHOUT DAMAGING THE INSULATION, AND SEAL AIRTIGHT AROUND INSULATED AND UNINSULATED PIPES FOR NOISE TRANSMISSION CONTROL.
2. METHODS THAT ARE LISTED FOR THE REQUIRED HOURLY RATINGS MUST BE USED FOR FIRE RATED WALLS. SEE (SECTION 21 05 03 - FIRE PROTECTION. SECTION 22 05 03 - PLUMBING, SECTION 23 05 03 - HVAC). ALL OF THE INTENTIONS IN NOTE 1 MUST BE MET BY THE SYSTEM SELECTED.
3. SEE ALSO (SECTION 22 05 29 - PLUMBING, SECTION 23 05 29 - HVAC) FOR MORE INFORMATION.
4. FLOOR OPENINGS ARE SIMILAR. SEE (SECTION 22 05 29 - PLUMBING, SECTION 23 05 29 - HVAC FOR DIFFERENCES BETWEEN FLOOR AND WALL PENETRATIONS.

1 WALL PENETRATION - NOISE CONTROL FRAMED WALL
NO SCALE

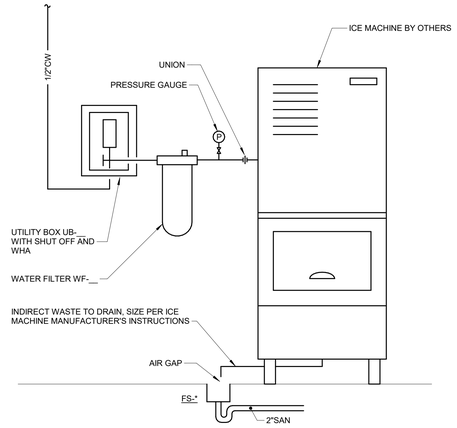

2 UTILITY BOX - ICE MACHINE
NO SCALE

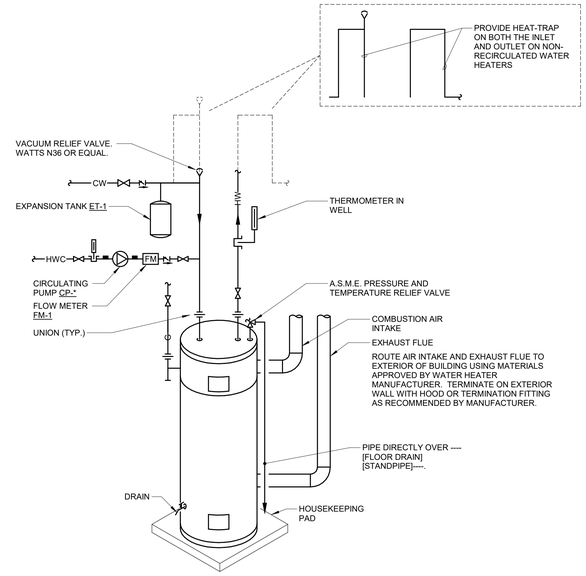

3 WATER HEATER - GAS TANK W/HWC
NO SCALE

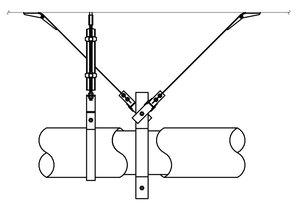

LONGITUDINAL BRACE

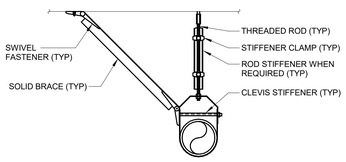

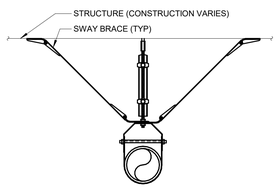

UNIVERSE CABLE BRACE

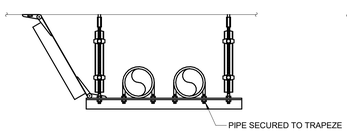

TRANSVERSE SOLID BRACE

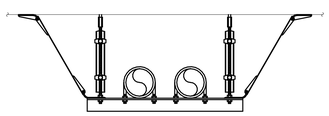

TRANSVERSE CABLE BRACE

NOTES:

1. GENERAL REQUIREMENTS FOR TRANSVERSE AND LONGITUDINAL BRACING OF PIPES ARE SHOWN. SPECIFIC REQUIREMENTS, INCLUDING ATTACHMENT TO BUILDING STRUCTURE, SHALL BE DETERMINED BY THE SEISMIC RESTRAINT DESIGNER. REFER TO SPECIFICATION SECTION (SECTION 21 05 50 - FIRE SUPPRESSION, SECTION 22 05 50 - PLUMBING, SECTION 23 05 50 - HVAC) FOR REQUIREMENTS.
2. REFER TO GENERAL PIPE SUPPORT DETAIL AND SPECIFICATION SECTION (SECTION 22 05 29 - PLUMBING, SECTION 23 05 29 - HVAC) FOR INSULATED PIPING CONSIDERATIONS.

4 SEISMIC SUPPORT - PIPING BRACING
NO SCALE

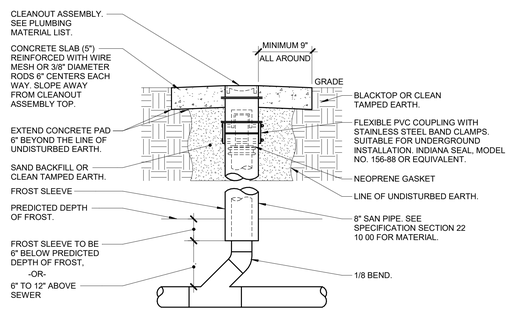

5 YARD CLEANOUT
NO SCALE

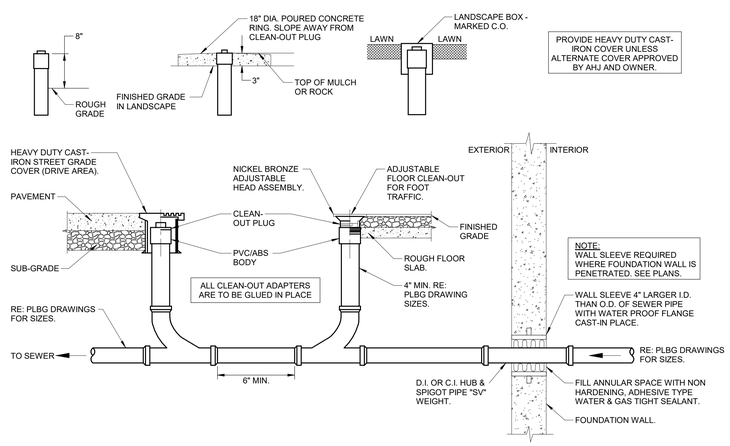

6 YARD CLEANOUT - TWO-WAY
NO SCALE

tsk
314 South Water Street,
Suite 100
Henderson, NV 89015
phone: 702.456.3000
fax: 702.898.6209
www.tska.com

THESE DRAWINGS AND SPECIFICATIONS ARE THE PROPERTY OF TATE SNYDER KIMSEY ARCHITECTS AND MAY NOT BE REPRODUCED OR USED FOR ANY PURPOSE WITHOUT THE ARCHITECTS WRITTEN CONSENT. AS INSTRUMENTS OF SERVICE, THESE DOCUMENTS ARE NOT FINAL AND READY FOR USE, AND THEREFORE NOT VALID, UNLESS THEY ARE SEALED, SIGNED AND DATED.

Consultant

IMEG
www.imegcorp.com
4590 LONGLEY LANE
RENO, NV 89502
P: 775.828.4889
PROJECT #22007707.00

IMEG CORP. RESERVES PROPRIETARY RIGHTS, INCLUDING COPYRIGHTS, TO THIS DRAWING AND THE DATA SHOWN THEREON. SAID DRAWING AND/OR DATA ARE THE EXCLUSIVE PROPERTY OF IMEG CORP. AND SHALL NOT BE USED OR REPRODUCED FOR ANY OTHER PROJECT WITHOUT THE EXPRESS WRITTEN APPROVAL AND PARTICIPATION OF IMEG CORP. ©2022 IMEG CORP.

0 1 2 3
REF. SCALE IN INCHES PROJECT #22007707.00

PLEASE RECYCLE

Project
SPARKS FIRE STATION #6

6963 WINGFIELD HILLS ROAD, SPARKS, NV 89436

Job No: 22-043

Owner
CITY OF SPARKS

PROFESSIONAL ENGINEER - STATE OF NEVADA
KATHY L. CALLENDER
Exp:12/31/2024
MECHANICAL
No. 026794
01/03/2024

BID SET

REVISIONS		
REV	DATE	DESCRIPTION

Sheet Title
PLUMBING DIAGRAMS

Date: 01/04/2024
Sheet No:
P0.11

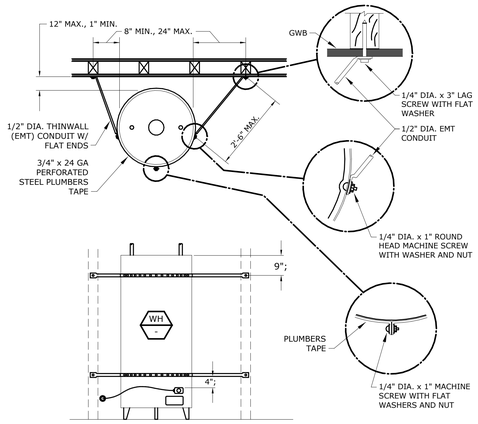

1 WATER HEATER SIESMIC BRACING

12" = 1'-0"

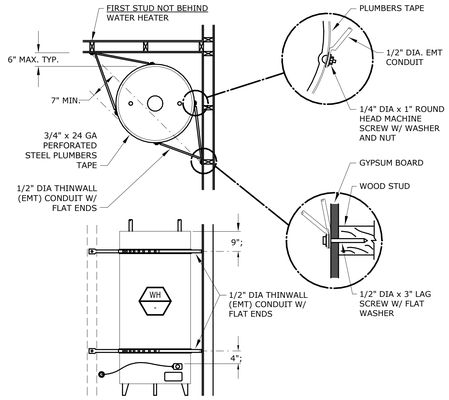

2 WATER HEATER SIESMIC BRACING AT CORNER

12" = 1'-0"

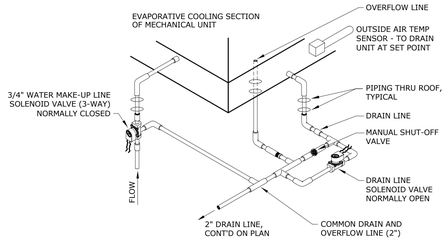

3 EVAPORATIVE COOLER PIPING

12" = 1'-0"

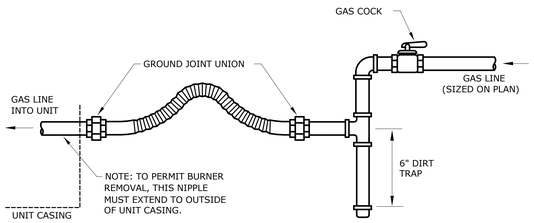

4 TYPICAL DIRT LEG DIAGRAM

12" = 1'-0"

tsk

314 South Water Street,
Suite 100
Henderson, NV 89015
phone: 702.456.3000
fax: 702.898.6209
www.tska.com

THESE DRAWINGS AND SPECIFICATIONS ARE THE PROPERTY OF TATE SNYDER KIMSEY ARCHITECTS AND MAY NOT BE REPRODUCED OR USED FOR ANY PURPOSE WITHOUT THE ARCHITECTS WRITTEN CONSENT. AS INSTRUMENTS OF SERVICE, THESE DOCUMENTS ARE NOT FINAL AND READY FOR USE, AND THEREFORE NOT VALID, UNLESS THEY ARE SEALED, SIGNED AND DATED.

Consultant

IMEG
4599 LONGLEY LANE
RENO, NV 89502
P: 775.826.4899
PROJECT #22007707.00
www.imegcorp.com

IMEG CORP. RESERVES PROPRIETARY RIGHTS, INCLUDING COPYRIGHTS, TO THIS DRAWING AND THE DATA SHOWN THEREON. SAID DRAWING AND/OR DATA ARE THE EXCLUSIVE PROPERTY OF IMEG CORP. AND SHALL NOT BE USED OR REPRODUCED FOR ANY OTHER PROJECT WITHOUT THE EXPRESS WRITTEN APPROVAL AND PARTICIPATION OF IMEG CORP. ©2022 IMEG CORP.

0 1 2 3
REF. SCALE IN INCHES PROJECT #22007707.00

PLEASE RECYCLE

Project

SPARKS FIRE STATION #6

6963 WINGFIELD HILLS ROAD, SPARKS, NV 89436

Job No: 22-043

Owner

CITY OF SPARKS

PROFESSIONAL ENGINEER - STATE OF NEVADA
KATHRYN DALLENDER
Exp:12/31/2024
MECHANICAL
No. 026794

01/03/2024

BID SET

REVISIONS		
REV	DATE	DESCRIPTION

Sheet Title

PLUMBING DIAGRAMS

Date: 01/04/2024

Sheet No:

P0.12

DOMESTIC WATER BRANCH PIPE SIZING CALC

PROJECT: SPARKS FIRE STATION #6 DATE: 01/24/2023
PROJECT NO.: 22007707.01 BY: IMEG CHECKED BY: PE

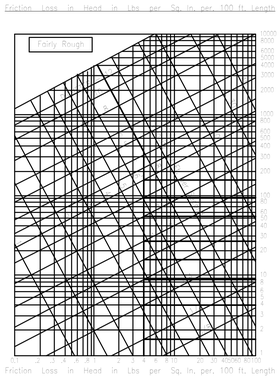

STATIC HEAD =	30	FT. x	0.43	=	12.90	PSI							
PRESSURE AVAIL. =		60	(SERVICE PRESS.) - (		12.90	+	25	(REQ. PRESS.) +		15	(METER)) =	7.10	
LONGEST RUN =		120	FT.										
35 % FITTING LENGTH =		42	FT.										
TOTAL LENGTH =		162	FT.										
ALLOWABLE FRICTION LOSS/100 FT. =				(7.10) *	100	PSI	=	4.38					
					162								

COLD WATER	MAX. FLOW (GPM)	FLUSH TANK F.U.	FLUSH VALVE F.U.	VELOCITY (FPS)
1/2"	2.0	1	-	2.2
3/4"	4.0	4	-	2.7
1"	7.0	8	-	3.2
1 1/4"	14.0	20	5	3.6
1 1/2"	22.0	34	8	4.2
2"	45.0	107	37	4.8
2 1/2"	78.0	95	220	5.3
3"	140.0	585	490	5.9
HOT WATER	MAX. FLOW (GPM)	FLUSH TANK F.U.	FLUSH VALVE F.U.	VELOCITY (FPS)
1/2"	2.3	1.7	-	-
3/4"	5.3	6.0	-	-
1"	9.4	12.2	-	-
1 1/4"	20.4	31.4	-	5.1
1 1/2"	27.4	46.2	-	5.2
2"	34.9	67.1	-	-

AIR COMPRESSOR SCHEDULE

MARK	MANUFACTURER MODEL	SCFM AT 175 PSIG	GALLON RECEIVER	RPM	MOTOR HP	MOTOR AMPS	MOTOR V/PH/HZ	WEIGHT (LBS)	REMARKS
AC 1	INGERSOLL RAND 2545K10	35	120	1775	10	28	230/3/60	1104	1, 2

1. "E" SERIES STARTER MOUNTED AND WIRED, AUTOMATIC START AND STOP OPERATION WITH NEMA 1 PRESSURE SWITCH AND CONSTANT SPEED CONTROL, S.S. FLEX CONNECTOR
2. INCLUDE AUTO CONDENSATE DRAIN VALVE

AIR DRYER SCHEDULE

MARK	MANUFACTURER MODEL	SCFM AT 100 PSIG	INLET AIR TEMP.	DEWPOINT RANGE	MOTOR HP	MOTOR AMPS	MOTOR V/PH/HZ	WEIGHT (LBS)	REFRIG	REMARKS
AD 1	INGERSOLL RAND MODEL D72IN	35	140	<50 DEG F	0.25	6	115/1/60	61.7	R-134A	1, 2

1. PROVIDE ELECTRIC TIMER SOLENOID
2. PROVIDE INGERSOLL RAND F-SERIES FILTER, MODEL FA75I

GAS FIRED WATER HEATER SCHEDULE

MARK	MANUFACTURER MODEL	LOCATION	GENERAL DATA: STORAGE CAPACITY (GAL)	GAS INPUT (MBH)	GAS CONNECTION (IN)	MINIMUM EFFICIENCY (%)	RECOVERY (GPH)	TEMP RISE (ºF)	ELECTRICAL V/PH/HZ, AMPS	OPERATING WEIGHT (LBS)	REMARKS
WH 1	BRADFORD WHITE EF-100T-300E-3N(A)	STORAGE ROOM 152	100	300	0.75	92	335	100	120/1/60, 1.8	900	1, 2, 3, 6, 7
WH 2	BRADFORD WHITE EF-100T-199E-3N(A)	MECHANICAL ROOM 127	60	199	0.75	98.5	239	100	120/1/60, 1.8	900	1, 2, 3, 4, 5, 7

1. SEISMIC RESTRAINT STRAPS.
2. T&PR VALVE.
3. 12" HIGH METAL STAND.
4. 3" PVC CONCENTRIC VENT KIT.
5. STORAGE TEMPERATURE: 120 DEG. F.
6. STORAGE TEMPERATURE: 140 DEG F.
7. PROVIDE NEUTRALIZER KIT

FIRE SPRINKLER NOTES

NOTE: FIRE SPRINKLER SYSTEM SHALL BE SUBMITTED AND REVIEWED UNDER A SEPARATE PERMIT.

1. SPRINKLER CONTRACTOR SHALL PROVIDE SYSTEM DESIGN, LABOR, MATERIALS, EQUIPMENT AND SERVICES NECESSARY FOR A COMPLETE DESIGN BUILD FIRE SPRINKLER SYSTEM.
2. THE DESIGN AND INSTALLATION SHALL CONFORM TO ALL REQUIREMENTS OF THE NATIONAL FIRE PROTECTION ASSOCIATION (NFPA 13) AND THE GENERAL REQUIREMENTS OF APPLICABLE SECTIONS OF THE INTERNATIONAL BUILDING CODE, THE SPECIFIC REQUIREMENTS OF THE LOCAL FIRE PREVENTION BUREAU, AND THE OWNER'S INSURANCE UNDERWRITER.
3. THE SYSTEM SHALL INCLUDE, BUT IS NOT LIMITED TO, SPRINKLER HEADS, VALVES, ESCUTCHEONS, PIPING, FITTINGS, HANGERS, DRAINS, WET TEST CONNECTIONS, SIGNS AND OTHER IDENTIFICATION MARKINGS AS REQUIRED.
4. ALL MATERIALS AND EQUIPMENT USED IN THE INSTALLATION OF FIRE PROTECTION SYSTEMS SHALL BE LISTED AS APPROVED BY UNDERWRITERS LABORATORIES, INC., "LIST OF INSPECTED FIRE PROTECTION EQUIPMENT AND MATERIALS," OR APPROVED BY OTHER APPROPRIATE, NATIONALLY RECOGNIZED TESTING LABORATORIES FOR USE IN SPRINKLER SYSTEMS, AND SHALL BE THE LATEST DESIGN OF THE MANUFACTURER.
5. SPRINKLER HEADS SHALL BE PROVIDED AS REQUIRED AND CONFORM TO THE LATEST EDITION OF NFPA 13.
6. PIPING, PIPE HANGERS AND SUPPORTS SHALL CONFORM TO THE LATEST EDITION OF NFPA 13.
7. INSTALL HEADS AT FINISHED HEIGHT WITH ESCUTCHEON, OR DIRECTLY IN REDUCER OF EXTRA LENGTH DROPS RATHER THAN PLUGGING. IF EXTRA LENGTH DROPS ARE INSTALLED, CUT BACK HEADS AFTER CEILING INSTALLATION IN THE CUSTOMARY MANNER.
8. SPRINKLER DROPS ARE TO BE INSTALLED PRIOR TO INSTALLATION OF CEILING SYSTEM THEN REMOVED AND REINSTALLED AFTER INSTALLATION OF CEILING SYSTEM, WITH DROPS MODIFIED, AS REQUIRED. PROVIDE ESCUTCHEONS AT EACH SPRINKLER HEAD.
9. COORDINATE WITH OTHER WORK, INCLUDING DUCTWORK, DIFFUSERS, GRILLES, ELECTRICAL AND PLUMBING PIPING, AS NECESSARY TO INTERFACE COMPONENTS OF FIRE SPRINKLER PIPING PROPERLY WITH OTHER WORK.
10. AFTER SYSTEM IS COMPLETELY INSTALLED, IT SHALL BE FILLED AND TESTED IN ACCORDANCE WITH LOCAL REQUIREMENTS, AND THE REQUIREMENTS OF THE APPLICABLE NFPA BULLETINS.
11. FINAL SHOP DRAWINGS SHALL FIRST BE SUBMITTED TO THE STATE FIRE MARSHAL. FOLLOWING THEIR REVIEW AND APPROVAL, SUBMIT TO THE OWNER'S INSURANCE COMPANY. FOLLOWING THEIR SIGNATURED APPROVAL, THE SHOP DRAWINGS SHALL BE SENT TO THE ARCHITECT FOR CEILING DESIGN COORDINATION ONLY. IF REQUIRED BY ANY REVIEWING AGENT, OR IF REVIEW COMMENTS REQUIRE EXTENSIVE REVISIONS, THE SUBMITTAL SHALL BE REVISED AS REQUIRED AND RESUBMITTED FOR APPROVAL BEFORE SUBMISSION TO THE ARCHITECT'S OFFICE.
12. THE CONTRACTOR GUARANTEES THAT ALL WORK INSTALLED SHALL BE FREE OF ALL DEFECTS IN WORKMANSHIP AND MATERIAL FOR A PERIOD OF ONE YEAR FROM THE DATE OF THE CERTIFICATION OF COMPLETION AND ACCEPTANCE OF THE WORK.
13. ADDITIONAL SPRINKLER HEADS SHALL BE PROVIDED AS REQUIRED AND CONFORM TO THE LATEST EDITION OF NFPA 13.
14. ADDITIONAL PIPING, PIPE HANGERS AND SUPPORTS SHALL CONFORM TO THE LATEST EDITION OF NFPA 13.
15. ACTIVATE THE SPRINKLER SYSTEM FOR PROTECTION PURPOSES AS SOON AS DROPS HAVE BEEN COMPLETE IN ANY ONE SECTION OF THE SPRINKLER.
16. ALL SPRINKLER HEADS AND ESCUTCHEONS SHALL HAVE MOUNTING TYPE (FLUSH OR SEMI-RECESSED), FINISH AND COLOR AS SELECTED BY ARCHITECT.
17. ALL SPRINKLERS SHALL BE CENTERED WITHIN THE CEILING GRID, COORDINATE EXACT LOCATION WITH ARCHITECT PRIOR TO SUBMITTAL OF DRAWINGS TO FIRE DEPARTMENT.

TEMPERING VALVE SCHEDULE

MARK	MANUFACTURER MODEL	dP (PSIG)	GPM	COLD WATER INLET TEMP	HOT WATER INLET TEMP	OUTLET TEMPERATURE	INLET SIZE	OUTLET SIZE	REMARKS
TMV 1	POWERS LFMM433-1	45	110	40	140	120	1.25"	1.25"	

WATER HAMMER ARRESTORS

P.D.I. SYMBOL	FIXTURE UNITS
A	1-11
B	12-32
C	33-60
D	61-113
E	114-154
F	155-330

NOTE: INSTALL AS PER MANUFACTURER MODEL'S RECOMMENDATIONS (P.D.I. = PLUMBING DRAINAGE INSTITUTE STANDARDS.)

RECIRCULATING PUMP SCHEDULE

MARK	MANUFACTURER MODEL	SERVICE	FLOW GPM	HEAD FT	MOTOR AMP	MOTOR V/PH/HZ	REMARKS
CP 1	GRUNDFOS UP 10-16 B5/ATLC	HWR FOR WH-1	0.5	5	0.23	115/1/60	1, 2
CP 2	GRUNDFOS UP 10-16 B5/ATLC	HWR FOR WH-2	0.5	5	0.23	115/1/60	1, 2

1. PUMP SHALL OPERATE PER PIPE MOUNTED AQUASTAT AND TIMECLOCK.
2. SET AQUASTAT TO PUMP "ON" AT 115° F AND "OFF" AT 120° F.

PLUMBING FIXTURE ROUGH-IN SCHEDULE

MARK	FIXTURE	ROUGH-IN (INCHES) C.W.	TW	HW	V	S/W	TRAP	REMARKS
WC-1	WATER CLOSET	1 1/4"	-	-	2	4	-	WALL MOUNT - ACCESSIBLE
WC-2	WATER CLOSET	1 1/4"	-	-	2	4	-	FLOOR MOUNT - ACCESSIBLE
L-1	LAVATORY	1/2	-	1/2	2	2	1 1/4 x 1 1/2	COUNTER MOUNT - ACCESSIBLE
L-2	LAVATORY	1/2	-	1/2	2	2	1 1/4 x 1 1/2	WALL HUNG - ACCESSIBLE
SH-1	SHOWER	1/2	-	1/2	2	2	2	
SH-2	SHOWER	1/2	-	1/2	2	2	2	ACCESSIBLE
S-1	SINK	1/2	-	1/2	2	2	1 1/4 x 1 1/2	COUNTER MOUNT
S-2	SINK	1/2	-	1/2	2	2	1 1/4 x 1 1/2	COUNTER MOUNT
S-3	SINK	1/2	-	1/2	2	2	1 1/4 x 1 1/2	COUNTER MOUNT
S-4	SINK	1/2	-	1/2	2	2	1 1/4 x 1 1/2	WALL MOUNT
EWC-1	WATER COOLER	1/2	-	-	2	2	-	WALL RECESSED MOUNT - ACCESSIBLE
HB-1	HOSE BIB	3/4	-	-	-	-	-	WALL MOUNT
HB-2	HOSE BIB	3/4	-	-	-	-	-	WALL MOUNT
MS-1	MOP SINK	1/2	-	1/2	2	3	-	FLOOR MOUNT
WB-1	WASHER BOX	1/2	-	1/2	2	2	-	WALL MOUNT
FS-1	FLOOR SINK	-	-	-	2	4	-	SIZE AS SHOWN UNLESS NOTED OTHERWISE
FS-2	FLOOR SINK	-	-	-	2	3	-	SIZE AS SHOWN UNLESS NOTED OTHERWISE
FD-1	FLOOR DRAIN	-	-	-	2	4	-	SIZE AS SHOWN UNLESS NOTED OTHERWISE
FD-2	FLOOR DRAIN	-	-	-	2	3	-	SIZE AS SHOWN UNLESS NOTED OTHERWISE
FD-3	FLOOR DRAIN	-	-	-	2	2	-	SIZE AS SHOWN UNLESS NOTED OTHERWISE
TD-1	TRENCH DRAIN	-	-	-	2	4	-	SIZE AS SHOWN UNLESS NOTED OTHERWISE
WB-1	WASHING MACHINE BOX	3/4	3/4	-	2	2	-	WALL RECESSED MOUNT
IMB-1	ICE MAKER BOX	3/4	-	-	-	-	-	WALL RECESSED MOUNT
EWSS-1	EYEWASH/SHOWER	1	1	1	2	2	-	WALL RECESSED MOUNT
HR-1	HOSE REEL - CA	-	-	-	-	-	-	3/8" INLET, WALL MOUNT

PROVIDE STOPS ON ALL FIXTURES NOT FURNISHED WITH INTEGRAL STOPS.

PLUMBING DRAINAGE FIXTURE UNIT SCHEDULE

MARK	DESCRIPTION	DRAINAGE FIXTURE UNITS (DFU)
WC-1, 2	WATER CLOSET	3
L-1, 2	LAVATORY	1 **
SH-1, 2	SHOWER	2
S-1, 2	SINK	2
S-3, 4	SINK	2
EWC-1	WATER COOLER	0.5
MS-1	MOP SINK	3
WB-1	WASHER BOX	4
FS-1&2	FLOOR SINK	8
FS-2	FLOOR SINK	6
FD-1	FLOOR DRAIN	8
FD-2	FLOOR DRAIN	6
FD-3	FLOOR DRAIN	4
TD-1	TRENCH DRAIN	4
EWSS-1	EYEWASH/SHOWER	2
-	RED ZONE LAUNDRY CLOTHES WASHERS	6

** - FOR LAVATORIES IN GROUPS OF 2 OR 3, THE GROUP OF LAVATORIES SHALL BE WORTH 2 DFU.

PLUMBING FIXTURE SPECIFICATIONS

MARK	DESCRIPTION
WC-1	WATER CLOSET (ACCESSIBLE) - AMERICAN STANDARD AFWALL MODEL #2257.101, WALL MOUNTED, VITREOUS CHINA, 2 1/8" TRAPWAY, ELONGATED BOWL, SIPHON JET, 1.28 GPF, 1 1/2" TOP SPUD. CARRIER: ZURN #Z1202-N1.4, FLUSH VALVE: ZURN AQUAFLUSH MODEL #Z6000-AV, MANUAL, 1.28 GPF. SEAT: AMERICAN STANDARD MODEL #5901.100, OPEN FRONT, LESS COVER. COORDINATE WITH ARCHITECTURAL DRAWINGS FOR MOUNTING HEIGHTS PRIOR TO ROUGH-IN.
WC-2	WATER CLOSET (ACCESSIBLE) - AMERICAN STANDARD MADERA MODEL #3043.001, FLOOR MOUNTED, VITREOUS CHINA, 2 1/8" TRAPWAY, ELONGATED BOWL, SIPHON JET, 1.28 GPF, 1 1/2" TOP SPUD. FLUSH VALVE: ZURN AQUAFLUSH MODEL #Z6000-AV, MANUAL, 1.28 GPF. SEAT: AMERICAN STANDARD MODEL #5901.100, OPEN FRONT, LESS COVER. MOUNT TO ADA REQUIREMENTS.
L-1	LAVATORY (ACCESSIBLE) - AMERICAN STANDARD 0491.019, DROP-IN, WITH FRONT OVERFLOW AND FAUCET LEDGE AT 4" OC. FAUCET: SLOAN EBF-85-4-BAT-BDM, SENSOR OPERATED/BATTERY POWERED, BELOW DECK MIXING VALVE (SET OUTLET TEMP TO 105ºF). TRAP: 1 1/4" X 1 1/2" ADJUSTABLE P-TRAP. STAINLESS STEEL BRAIDED RISERS WITH LOOSE KEY STOPS. PROVIDE PIPE PROTECTION PER ADA REQUIREMENTS.
L-2	LAVATORY (ACCESSIBLE) - AMERICAN STANDARD #0355.012, LUCERNE VITREOUS CHINA, WALL MOUNT WITH FRONT OVERFLOW AND FAUCET LEDGE AT 4" OC, WITH SELF SUPPORTING CARRIER. FAUCET: SLOAN EBF-85-4-BAT-BDM, SENSOR OPERATED/BATTERY POWERED, BELOW DECK MIXING VALVE (SET OUTLET TEMP TO 105ºF). TRAP: 1 1/4" X 1 1/2" ADJUSTABLE P-TRAP. STAINLESS STEEL BRAIDED RISERS WITH LOOSE KEY STOPS. MOUNT TO ADA REQUIREMENTS. PROVIDE PIPE PROTECTION PER ADA REQUIREMENTS.
SH-1	SHOWER: FLORESTONE #42-3W, 42"x35"x73H FIBERGLASS, 1-PIECE SHOWER STALL, WITH SYMMONS #S-9601-PLR SHOWER SYSTEM WITH INTEGRAL VOLUME CONTROL & TEMPTROL PRESSURE BALANCING SHOWER VALVE, ONE (1) FIXED SHOWER HEAD, 2" BRASS DRAIN.
SH-2	SHOWER (ACCESSIBLE) - FLORESTONE #3PC-30-60H, 60"x30"x81.5"H FIBERGLASS, 3-PIECE SHOWER STALL. UNIT TO INCLUDE STAINLESS STEEL CURTAIN ROD; SYMMONS® PRESSURE BALANCE MIXING VALVE WITH CONCEALED CHECK STOPS; MOEN HAND-HELD SHOWER HEAD WITH HOSE AND STAINLESS STEEL SLIDE BAR/GRAB BAR; STAINLESS STEEL WRAP-AROUND GRAB BAR; STAINLESS STEEL RECESSED SOAP DISH. SUPPLIED WITH 2" BRASS DRAIN.
S-1	SINK - ELKAY MODEL CS45BPK, 45.5"X20.5"X10" DEEP, UNDERCOUNTER MOUNT, 1-BOWL, 16 GAUGE TYPE 304 STAINLESS STEEL. FAUCET: ELKAY MODEL #LKAV2061 WITH LEVER HANDLE. PROVIDE REMOVABLE STRAINER, 1 1/2" ADJUSTABLE P-TRAP. SUPPLIES: FLEXIBLE RISERS WITH STOPS. INCLUDE (2) AIR GAPS FOR DISHWASHERS.
S-2	SINK (ACCESSIBLE) - ELKAY MODEL ELUHAD141455PD, 16.5"X16.5"X5.38" DEEP, UNDERCOUNTER MOUNT, SINGLE BOWL, 18 GAUGE TYPE 304 STAINLESS STEEL. FAUCET: ELKAY MODEL #LKD2432BH, BLADE TYPE HANDLES, GOOSENECK, REMOVABLE STRAINER, 1 1/2" ADJUSTABLE P-TRAP. SUPPLIES: FLEXIBLE RISERS WITH STOPS.
S-3	SINK (ACCESSIBLE) - ELKAY MODEL LRAD3322, 33"x22"x6" DEEP, DROP-IN, SINGLE BOWL, 4-HOLE AT 4" CENTERS, 18 GAUGE TYPE 304 STAINLESS STEEL, SELF RIMMING, FAUCET: ELKAY MODEL #LKD2433, SIDE SPRAY, BLADE TYPE HANDLES, GOOSENECK, REMOVABLE STRAINER, 1 1/2" ADJUSTABLE P-TRAP. SUPPLIES: FLEXIBLE RISERS WITH STOPS.
S-4	SERVICE SINK - ELKAY MODEL ESS4924R2, 49.5""X24"X10" DEEP, SINGLE BOWL, 2-HOLE AT 8" CENTERS, 14 GAUGE TYPE 304 STAINLESS STEEL, 30" DRAIN BOARD, WALL HUNG, FAUCET: ELKAY MODEL #LK9408P03T4H, WALL MOUNT, 4" WRIST BLADES, AND PALE HOOK, REMOVABLE STRAINER, 1 1/2" ADJUSTABLE P-TRAP. SUPPLIES: FLEXIBLE RISERS WITH STOPS.
GD-1	GARBAGE DISPOSER: IN-SINK-ERATOR "BADGER 5" GARBAGE DISPOSER, STAINLESS STEEL GRIND CHAMBER, FULLY INSULATED; 120V/1/Ph/60 Hz, 1/2 HP, 6.9 AMP ELECTRICAL SERVICE.
MS-1	MOP SINK - FLORESTONE MODEL MSR2424, 24"X24"X10" DEEP WITH 3" CAST IRON OUTLET. FAUCET: MOEN MODEL 8230, INTEGRAL STOPS, WITH 3/4" HOSE THREAD OUTLET, BUCKET/PAIL HOOK AND INTEGRAL VACUUM BREAKER.
FS-1	FLOOR SINK - JAY R SMITH MODEL 320-Y04, 12"X12"X6" DEEP, 4" OUTLET, CAST IRON BODY WITH ACID RESISTING ENAMELING, DOME STRAINER. 1/2 GRATE. PROVIDE TRAP SEAL: RECTOR SEAL MODEL SS3000V (OR EQUAL).
FS-2	FLOOR SINK - JAY R SMITH MODEL 320-Y04, 6"X6"X6" DEEP, 3" OUTLET, CAST IRON BODY WITH ACID RESISTING ENAMELING, DOME STRAINER. 1/2 GRATE. PROVIDE TRAP SEAL: RECTOR SEAL MODEL SS3000V (OR EQUAL).
FD-1	FLOOR DRAIN - JAY R SMITH MODEL 2050T, 4" OUTLET (NO-HUB), CAST IRON BODY, ADJUSTABLE ROUND STRAINER. PROVIDE TRAP SEAL: RECTOR SEAL MODEL SS2009V (OR EQUAL).
FD-2	FLOOR DRAIN - JAY R SMITH MODEL 2050T, 3" OUTLET (NO-HUB), CAST IRON BODY, ADJUSTABLE ROUND STRAINER. PROVIDE TRAP SEAL: RECTOR SEAL MODEL SS2009V (OR EQUAL).
FD-3	FLOOR DRAIN - JAY R SMITH MODEL 2050T, 2" OUTLET (NO-HUB), CAST IRON BODY, ADJUSTABLE ROUND STRAINER. PROVIDE TRAP SEAL: RECTOR SEAL MODEL SS2009V (OR EQUAL).
TD-1	TRENCH DRAIN - JAY R SMITH POLYPROPYLENE DRAIN SYSTEM, (6) 3.28' SECTIONS, 6" WIDE ENVIRO-FLO II TRENCH DRAINS WITH EXTRA HEAVY DUTY FRAME SYSTEM FOR EXTRA HEAVY DUTY APPLICATIONS - FIGURE 9931, 0.6% BUILT-IN SLOPE, 4" NO-HUB DRAIN OUTLET & END CAPS. GRATE TO BE CLASS E RATED.
HB-1	HOSE BIBB - WOODFORD MODEL RB65 AUTOMATIC DRAINING FREEZELESS WALL HYDRANT IN BOX WITH VACUUM BREAKER AND LOOSE TEE KEY.
HB-2	HOSE BIBB - WOODFORD MODEL V26-MH ANTI-SIPHON HOSE BIBB WITH VACUUM BREAKER. BRASS CONSTRUCTION WITH METAL HANDLE.
WB-1	WASHING MACHINE CONNECTION BOX - GUY GRAY MODEL FRM12PHA, RECESSED. 1/4 TURN BALL VALVES WITH INTEGRAL WATER HAMMER ARRESTORS.
RD-1	ROOF DRAIN - JAY R. SMITH #1010Y, 4" CAST IRON BODY, UNDERDECK CLAMP.
RD-2	ROOF DRAIN - JAY R. SMITH #1010Y, 3" CAST IRON BODY, UNDERDECK CLAMP.
OD-1	OVERFLOW ROOF DRAIN - JAY R. SMITH #1070Y, 4" CAST IRON BODY, UNDERDECK CLAMP WITH STANDPIPE.
OD-2	OVERFLOW ROOF DRAIN - JAY R. SMITH #1070Y, 3" CAST IRON BODY, UNDERDECK CLAMP WITH STANDPIPE.
LT-1	OVERFLOW DRAIN DOWNSPOUT NOZZLE - JAY R. SMITH #1770Y, 3" CAST BRONZE BODY AND FLANGE.
IMB-1	ICE MAKER BOX - GUY GRAY MODEL #BIM875, RECESSED, GALVANIZED STEEL. SEE ARCHITECTURAL DRAWINGS FOR MOUNTING HEIGHT.
EWSS-1	EMERGENCY EYEWASH/SHOWER - HAWS MODEL 8356WCW BARRIER FREE WALL RECESSED. INCLUDE THERMOSTATIC MIXING VALVE (MODEL 9201E) AND ALARM SYSTEM (MODEL 9001).
HR-1	HOSE REEL - COXREELS EZ-COIL MODEL EZ-SH-450, 1/2" X 50 FT, 300 PSI SINGLE PEDESTAL WITH CONTROLLED RETRACTION COMPRESSED AIR HOSE REEL. WT=54 LBS. INCLUDE COXREEL WALL MOUNTED SWING BRACKET, MODEL 15720.
EWC-1	ELECTRIC WATER COOLER - (ACCESSIBLE) ELKAY MODEL LZWS-LRPBM28K, WALL RECESSED MOUNT, BARRIER FREE ACCESS, DUAL LEVEL WITH BOTTLE FILLING STATION. 8.0 GPH OF 50 DEG F WATER BASED ON 80 DEG F INLET / 80 DEG F AMBIENT. 370 WATTS, 1.0 FLA. MOUNT TO ADA REQUIREMENTS. REFRIGERANT SHALL BE NON-CFH/NON-HCFC.
PRV-1	COMPRESSED AIR PRESSURE REGULATOR - SPEEDAIRE MODEL 4ZM23, 3/4" INLET, 300 PSI MAXIMUM OPERATING PRESSURE, 220 MAXIMUM FLOW RATE. SET OUTLET PRESSURE TO 90 PSIG.
PRV-2	COMPRESSED AIR PRESSURE REGULATOR - SPEEDAIRE MODEL 4ZM23, 3/4" INLET, 300 PSI MAXIMUM OPERATING PRESSURE, 220 MAXIMUM FLOW RATE. SET OUTLET PRESSURE TO 135 PSIG.
PRV-3	DOMESTIC WATER PRESSURE REGULATOR - ZURN MODEL ZW209BP, 3" INLET, FLANGED, 150 PSI.

NOTE TO SUPPLIER: ALL FAUCETS, FLUSHVALVES, EYEWASH/SHOWER, SHOWER TRIM/VALVES, SINKS AND DRINKING FOUNTAINS TO HAVE ANTI-MICROBIAL COATING

tsk
314 South Water Street,
Suite 100
Henderson, NV 89015
phone: 702.456.3000
fax: 702.898.6209
www.tska.com

THESE DRAWINGS AND SPECIFICATIONS ARE THE PROPERTY OF TATE SNYDER KIMSEY ARCHITECTS AND MAY NOT BE REPRODUCED OR USED FOR ANY PURPOSE WITHOUT THE ARCHITECTS WRITTEN CONSENT. AS INSTRUMENTS OF SERVICE, THESE DOCUMENTS ARE NOT FINAL AND READY FOR USE, AND THEREFORE NOT VALID, UNLESS THEY ARE SEALED, SIGNED AND DATED.

Consultant

IMEG
www.imegcorp.com
6595 LONGLEY LANE
RENO, NV 89502
P: 775.826.4899
PROJECT #22007707.00

IMEG CORP. RESERVES PROPRIETARY RIGHTS, INCLUDING COPYRIGHTS, TO THIS DRAWING AND THE DATA SHOWN THEREON. SAID DRAWING AND/OR DATA ARE THE EXCLUSIVE PROPERTY OF IMEG CORP. AND SHALL NOT BE USED OR REPRODUCED FOR ANY OTHER PROJECT WITHOUT THE EXPRESS WRITTEN APPROVAL AND PARTICIPATION OF IMEG CORP. ©2022 IMEG CORP.

0 1 2 3
REF. SCALE IN INCHES PROJECT #22007707.00

PLEASE RECYCLE

Project
SPARKS FIRE STATION #6

6963 WINGFIELD HILLS ROAD, SPARKS, NV 89436

Job No: 22-043

Owner
CITY OF SPARKS

PROFESSIONAL ENGINEER - STATE OF NEVADA
KATHRYN E. HALLENDER
Exp:12/31/2024
MECHANICAL
No. 026794
01/03/2024

BID SET

REVISIONS		
REV	DATE	DESCRIPTION
1	05/31/23	Plan Check Responses

Sheet Title
PLUMBING SCHEDULES

Date: 01/04/2024
Sheet No:
P0.20

KEYNOTES: (#)

1. REFER TO CIVIL DRAWINGS FOR CONTINUATION.
2. TERMINATE ROOF OR OVERFLOW DRAIN 12" AFG, END WITH LAMBS TONGUE (LT-1).
3. 3"RD/OD FROM ROOF RECEPTORS ABOVE.
4. 2" VTR.
5. 3" VTR
6. INSTALL 3" SAN FROM CLOTHES WASHERS. RUN PIPE TO WALL, ADD P-TRAP IN WALL, CONNECT TO 4" SAN MAIN. ROUTE 2" VENT OVERHEAD. INCLUDE 4" VENT AT CLOTHES WASHER. INSTALL PER CLOTHES WASHERS MANUFACTURERS INSTALLATION INSTRUCTIONS.
7. CONNECT 2" SAN FROM S-4 AND ROUTE TO FLOOR SINK. LEAVE 1" AIRGAP OVER FLOOR SINK.
8. ROUTE 3"RD DOWN WALL, TERMINATE 12" AFF THROUGH CMU WALL, END WITH LAMBS TONGUE (LT-1).
9. CONNECT 2" SAN TO WASHING MACHINE BOX (WB-1).
10. 4" WASTE AND 2" VENT FROM/TO SAND OIL INTERCEPTOR. REFER TO CIVIL DRAWINGS.
11. 2 1/2" VTR.
12. TERMINATE DRAIN 1" ABOVE FLOOR SINK.

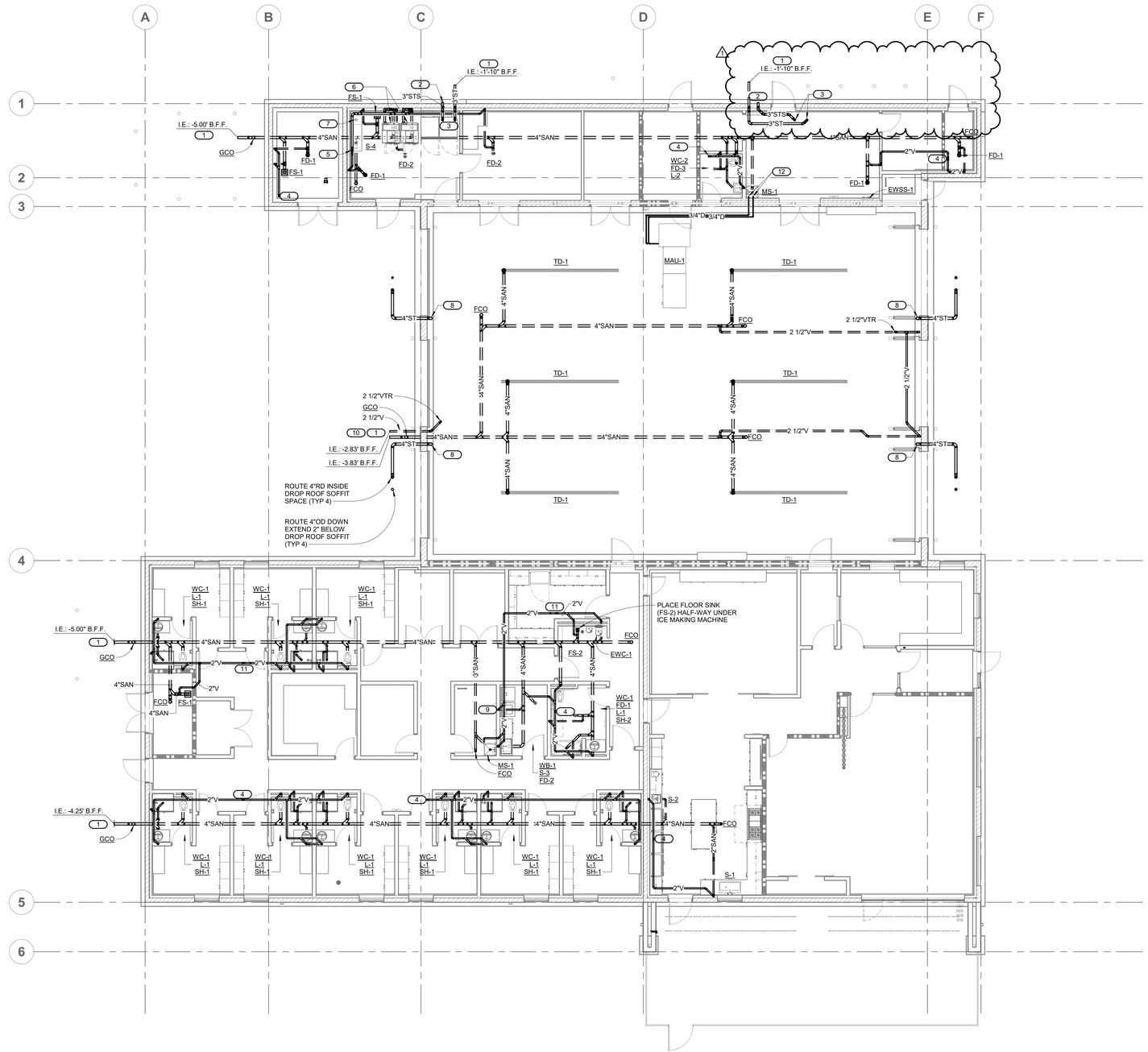

1 OVERALL FLOOR PLAN - WASTE & VENT

1/8" = 1'-0"

NORTH

tsk

314 South Water Street,
Suite 100
Henderson, NV 89015
phone: 702.456.3000
fax: 702.898.6209
www.tska.com

THESE DRAWINGS AND SPECIFICATIONS ARE THE PROPERTY OF TATE SNYDER KIMSEY ARCHITECTS AND MAY NOT BE REPRODUCED OR USED FOR ANY PURPOSE WITHOUT THE ARCHITECTS WRITTEN CONSENT. AS INSTRUMENTS OF SERVICE, THESE DOCUMENTS ARE NOT FINAL AND READY FOR USE, AND THEREFORE NOT VALID, UNLESS THEY ARE SEALED, SIGNED AND DATED.

Consultant

IMEG
www.imegcorp.com
4599 LONGLEY LANE
RENO, NV 89502
P: 775.826.4899
PROJECT #22007707.00

IMEG CORP. RESERVES PROPRIETARY RIGHTS, INCLUDING COPYRIGHTS, TO THIS DRAWING AND THE DATA SHOWN THEREON. SAID DRAWING AND/OR DATA ARE THE EXCLUSIVE PROPERTY OF IMEG CORP. AND SHALL NOT BE USED OR REPRODUCED FOR ANY OTHER PROJECT WITHOUT THE EXPRESS WRITTEN APPROVAL AND PARTICIPATION OF IMEG CORP. ©2022 IMEG CORP.

0 1 2 3
REF. SCALE IN INCHES PROJECT #22007707.00

PLEASE RECYCLE

Project

SPARKS FIRE STATION #6

6963 WINGFIELD HILLS ROAD,
SPARKS, NV 89436

Job No: 22-043

Owner

CITY OF SPARKS

PROFESSIONAL ENGINEER - STATE OF NEVADA
KATHRYN BALLENDER
Exp:12/31/2024
MECHANICAL
No. 026794

01/03/2024

BID SET

REVISIONS		
REV	DATE	DESCRIPTION
1	05/31/23	Plan Check Responses

Sheet Title

OVERALL FLOOR PLAN - WASTE & VENT

Date: 01/04/2024

Sheet No:

P2.00

SHEET NOTES:

A. ROUTE ALL CONDENSATE FROM FAN COILS, MAKE-UP AIR UNITS, AND CONDENSING WATER HEATERS TO NEAREST APPROVED SANITARY FIXTURE. CONDENSATE PIPE TO MATCH DRAIN SIZE AT EQUIPMENT. CONDENSATE PIPE TO BE SLOPED DOWN TO SANITARY FIXTURE AT 1/8" PER FOOT.
B. ALL WATER CLOSETS MUST HAVE AN ACCESSIBLE WATER HAMMER ARRESTER.

KEYNOTES: (#)

1. REFER TO CIVIL DRAWINGS FOR CONTINUATION.
2. SET MIXING VALVE (TMV-1) 7'-0" AFF. MOUNT ON WALL.
3. MOUNT WATER HEATER ON 12" STAND. SEISMICALLY RESTRAIN WATER HEATER TO WALL.
4. 2" HW/CW, CONNECT TO WATER HEATER
5. INSTALL (2) 3/4" HW/CW PIPING TO EACH CLOTHES WASHERS PER MANUFACTURERS INSTALLATION INSTRUCTIONS.
6. INSTALL GAS PIPING TO CLOTHES DRYERS PER MANUFACTURERS INSTALLATION INSTRUCTIONS.
7. INSTALL COMPRESSED AIR HOSE REEL ON WALL. CONNECT COMPRESSED AIR PIPING TO HOSE REEL. REGULATOR TO BE SET TO 135 PSIG OUTLET PRESSURE.
8. ADD TEMPERING VALVE BELOW LAVATORY. TEMPERING VALVE BY WATTS, MODEL ES-LFFMMV, 1/2" INLET/OUTLET
9. TEMPERING VALVE PROVIDED BY EYEWASH/SAFETY SHOWER (EWSS-1). SET DISCHARGE TEMPERATURE TO 70 DEG F

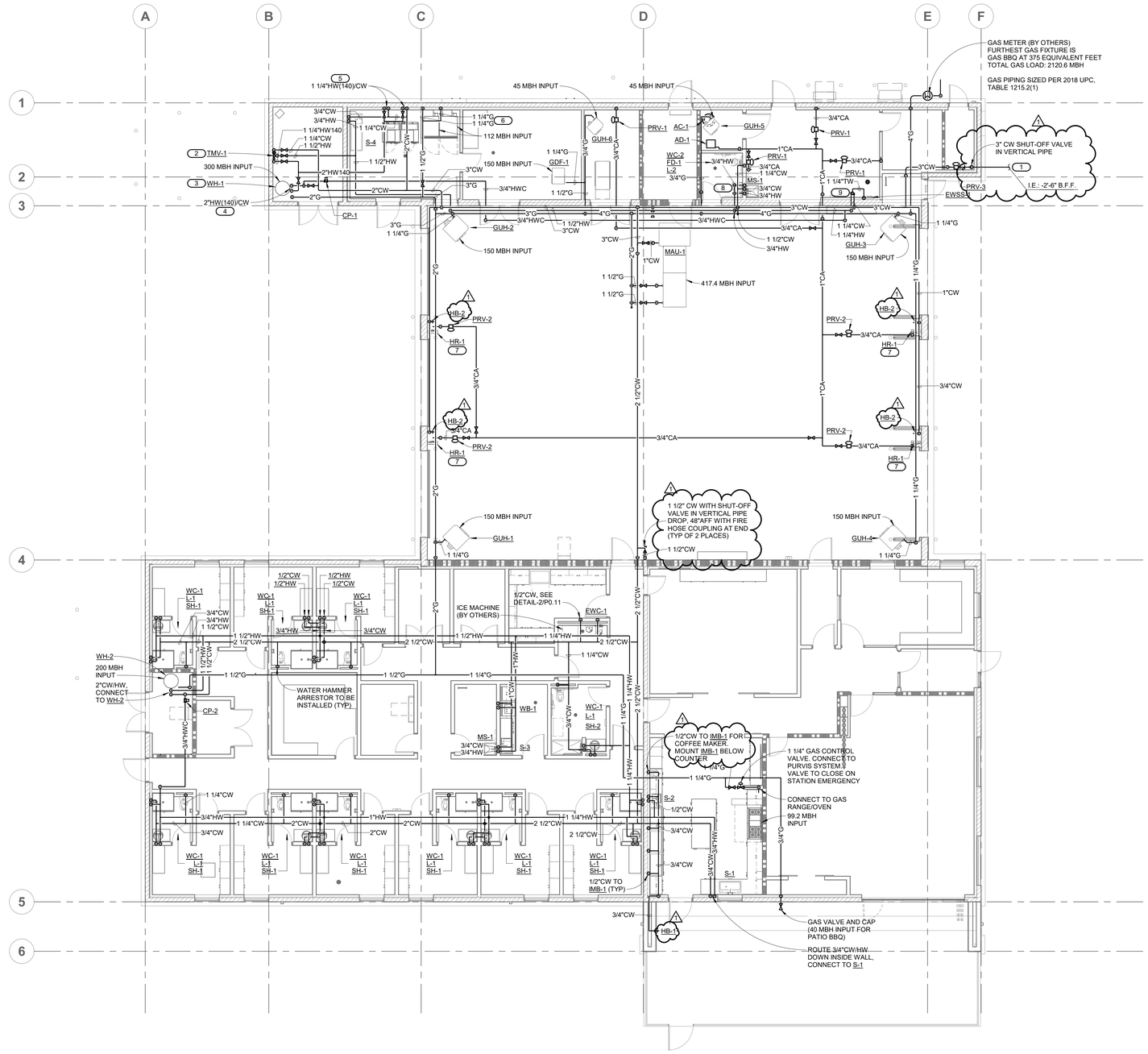

NORTH

1 OVERALL FLOOR PLAN - WATER & GAS

1/8" = 1'-0"

tsk

314 South Water Street,
Suite 100
Henderson, NV 89015
phone: 702.456.3000
fax: 702.898.6209
www.tska.com

THESE DRAWINGS AND SPECIFICATIONS ARE THE PROPERTY OF TATE SNYDER KIMSEY ARCHITECTS AND MAY NOT BE REPRODUCED OR USED FOR ANY PURPOSE WITHOUT THE ARCHITECTS WRITTEN CONSENT. AS INSTRUMENTS OF SERVICE, THESE DOCUMENTS ARE NOT FINAL AND READY FOR USE, AND THEREFORE NOT VALID, UNLESS THEY ARE SEALED, SIGNED AND DATED.

Consultant

IMEG
www.imegcorp.com
4599 LONGLEY LANE
RENO, NV 89502
P: 775.826.4899
PROJECT #22007707.00

IMEG CORP. RESERVES PROPRIETARY RIGHTS, INCLUDING COPYRIGHTS, TO THIS DRAWING AND THE DATA SHOWN THEREON. SAID DRAWING AND/OR DATA ARE THE EXCLUSIVE PROPERTY OF IMEG CORP. AND SHALL NOT BE USED OR REPRODUCED FOR ANY OTHER PROJECT WITHOUT THE EXPRESS WRITTEN APPROVAL AND PARTICIPATION OF IMEG CORP. ©2022 IMEG CORP.

0 1 2 3
REF. SCALE IN INCHES PROJECT #22007707.00

PLEASE RECYCLE

Project
SPARKS FIRE STATION #6

6963 WINGFIELD HILLS ROAD, SPARKS, NV 89436

Job No: 22-043

Owner
CITY OF SPARKS

PROFESSIONAL ENGINEER – STATE OF NEVADA
KATHY L. DALLENDER
Exp:12/31/2024
MECHANICAL
No. 026794
01/03/2024

BID SET

REVISIONS		
REV	DATE	DESCRIPTION
1	05/31/23	Plan Check Responses

Sheet Title
OVERALL FLOOR PLAN - WATER & GAS

Date: 01/04/2024
Sheet No:
P2.10

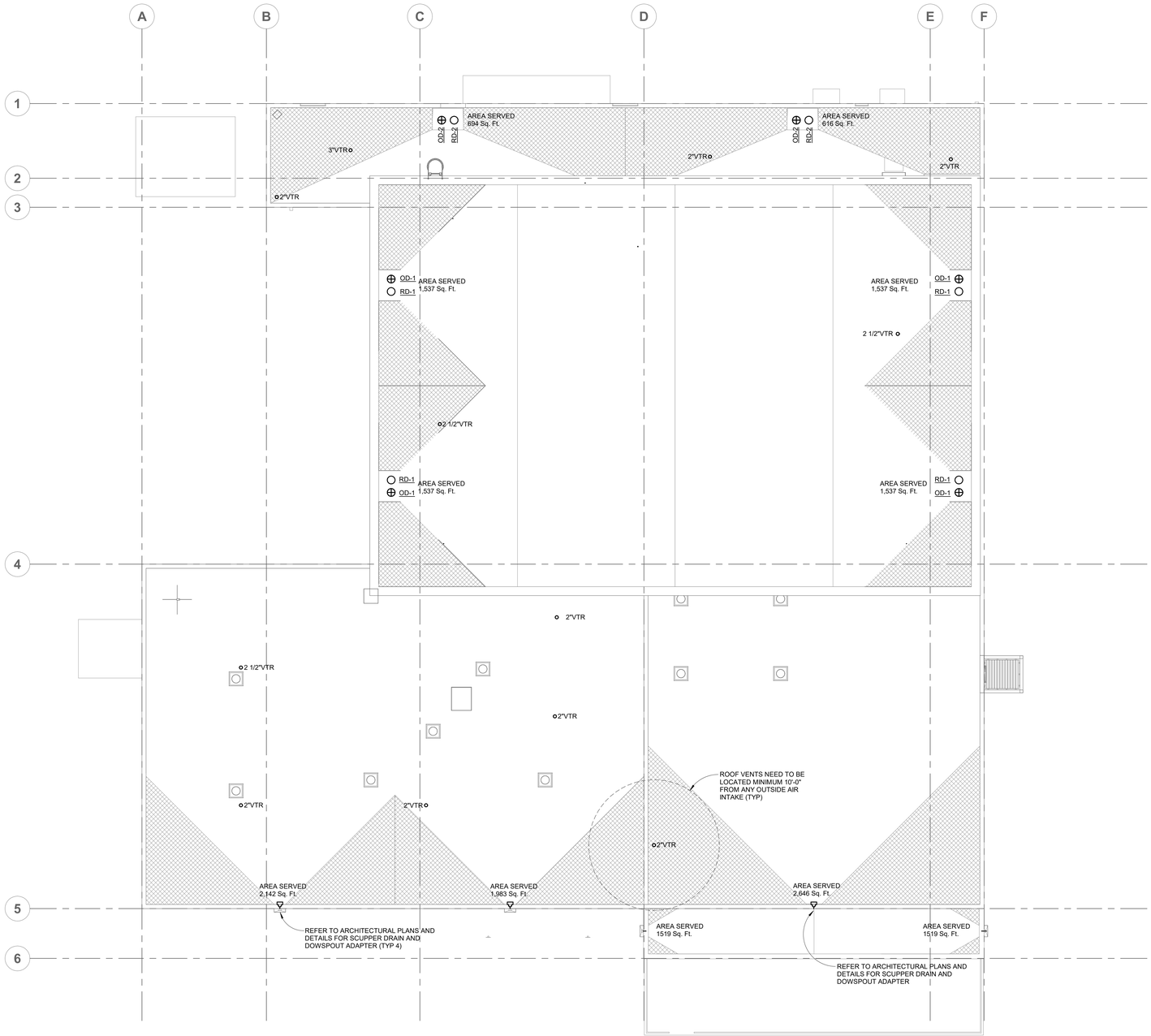

NORTH

1 OVERALL ROOF PLAN - PLUMBING

1/8" = 1'-0"

tsk

314 South Water Street,
Suite 100
Henderson, NV 89015
phone: 702.456.3000
fax: 702.898.6209
www.tska.com

THESE DRAWINGS AND SPECIFICATIONS ARE THE PROPERTY OF TATE SNYDER KIMSEY ARCHITECTS AND MAY NOT BE REPRODUCED OR USED FOR ANY PURPOSE WITHOUT THE ARCHITECTS WRITTEN CONSENT. AS INSTRUMENTS OF SERVICE, THESE DOCUMENTS ARE NOT FINAL AND READY FOR USE, AND THEREFORE NOT VALID, UNLESS THEY ARE SEALED, SIGNED AND DATED.

Consultant

IMEG
www.imegcorp.com
4599 LONGLEY LANE
RENO, NV 89502
P: 775.828.4599
PROJECT #22007707.00

IMEG CORP. RESERVES PROPRIETARY RIGHTS, INCLUDING COPYRIGHTS, TO THIS DRAWING AND THE DATA SHOWN THEREON. SAID DRAWING AND/OR DATA ARE THE EXCLUSIVE PROPERTY OF IMEG CORP. AND SHALL NOT BE USED OR REPRODUCED FOR ANY OTHER PROJECT WITHOUT THE EXPRESS WRITTEN APPROVAL AND PARTICIPATION OF IMEG CORP. ©2022 IMEG CORP.

0 1 2 3
REF. SCALE IN INCHES
PROJECT #22007707.00

PLEASE RECYCLE

Project

SPARKS FIRE STATION #6

6963 WINGFIELD HILLS ROAD,
SPARKS, NV 89436

Job No: 22-043

Owner

CITY OF SPARKS

CITY OF SPARKS FIRE DEPARTMENT Est. 1905

PROFESSIONAL ENGINEER - STATE OF NEVADA
KATHRYN CALLENDER
Exp:12/31/2024
MECHANICAL
No. 026794

01/03/2024

BID SET

REVISIONS		
REV	DATE	DESCRIPTION

Sheet Title

OVERALL ROOF PLAN - PLUMBING

Date: 01/04/2024

Sheet No:

P3.00

ELECTRICAL SYMBOL LIST

SYMBOL:	TAG:	SPEC SECTION:	DESCRIPTION:
S	SW-1P	26 09 33	SWITCH - SINGLE POLE
S_K	SW-1P-K	26 09 33	SWITCH - SINGLE POLE - KEY LOCK
S_3	SW-3W	26 09 33	SWITCH - THREE WAY
D_O	SW-OD	26 09 33	DIMMER - WALL DIMMER OCCUPANCY SENSOR
D	SW-D-LED	26 09 33	DIMMER - MULTI-LOCATION WALL DIMMER
LS	SW-LS	26 09 33	DAYLIGHT LEVEL SENSOR
OC	SW-OC-D	26 09 33	OCCUPANCY SENSOR - DUAL TECHNOLOGY
SW	SW	26 09 33	WALL CONTROL STATION
TC	TC-#	26 09 33	TIME SWITCH
#B	SW-DCS	26 09 33	DIMMER CONTROL STATION
OC	SW-OC-D-W	26 09 33	WALL MOUNTED OCCUPANCY SENSOR - DUAL TECHNOLOGY

ELECTRICAL SYMBOL LIST

SYMBOL:	TAG:	SPEC SECTION:	DESCRIPTION:
	REFER TO LUMINAIRE SCHEDULE		LINEAR LUMINAIRES
			TROFFER
			WALL SCONCE LUMINAIRE
			DOWNLIGHT LUMINAIRE
			AIMABLE OR WALL WASH LUMINAIRE
			INDUSTRIAL LUMINAIRE
			WALL BRACKET LUMINAIRE
			POLE MOUNTED LUMINAIRE
			SINGLE FACE EXIT SIGN
			DOUBLE FACE EXIT SIGN
			WALL/CEILING EMERGENCY EXIT SIGN
			EMERGENCY UNIT

ELECTRICAL SYMBOL LIST

SYMBOL:	TAG:	SPEC SECTION:	DESCRIPTION:
E / E	ECONN	26 05 33	ELECTRICAL CONNECTION
J / J	JB	26 05 33	JUNCTION BOX
	FB-# or PT-#	26 27 26	FLOOR BOX or POKE THROUGH
RI	RI-TECH	26 05 33	TECHNOLOGY OUTLET ROUGH-IN
RI	RI-TECH-C	26 05 33	TECHNOLOGY ROUGH-IN, CEILING
W/RI	RI-TECH-W	26 05 33	TECHNOLOGY ROUGH-IN, WALL PHONE
TV	RI-TV	26 05 33	TV ANTENNA OUTLET ROUGH-IN
	WM-#	26 05 35	MULTI OUTLET SYSTEM
	PANEL '###'	26 24 16	PANELBOARD - RECESS MOUNT
	PANEL '###'	26 24 16	PANELBOARD - SURFACE MOUNT
	MX-#/MS-# /CB-#/CS-#	26 24 19	MANUAL SWITCH / STARTER / COMBINATION STARTER/ CIRCUIT BREAKER. REFER TO DISC/STA SCHEDULE
	TR-#/DTR-#	26 22 00	TRANSFORMER. REFER TO TRANSFORMER SCHEDULE
	DS-#/FDS-#/DSS-#	26 28 16	DISCONNECT. REFER TO DISC/STA SCHEDULE

ELECTRICAL EQUIPMENT TAGS

TAG:	DESCRIPTION:	RELATED SPECIFICATION
ATS-#	AUTOMATIC TRANSFER SWITCH, REFER TO TRANSFER SWITCH SCHEDULE	26 36 00
GEN-#	GENERATOR	26 32 13
MX-#	MANUAL SWITCH, REFER TO DISCONNECT AND STARTER SCHEDULE	26 24 19
SB-#	SWITCHBOARD	26 24 13
UPS-#	UNINTERRUPTIBLE POWER SUPPLY	26 33 53

ELECTRICAL SYMBOL LIST

SYMBOL:	TAG:	SPEC SECTION:	DESCRIPTION:
	REC-DUP	26 27 26	DUPLEX RECEPTACLE, 125V
	REC-DUP-GFI	26 27 26	DUPLEX GFI RECEPTACLE, 125V
W	REC-DUP-WP	26 27 26	DUPLEX GFI WEATHERPROOF RECEPTACLE 125V
	REC-SIM-520R	26 27 26	SIMPLEX RECEPTACLE, 125V
	REC-SIM-530R	26 27 26	RECEPTACLE, 125V
	REC-SIM-550R	26 27 26	RECEPTACLE 125V, 50A, 125V
	REC-SIM-620R	26 27 26	RECEPTACLE, 6-20R, 250V
	REC-SIM-630R	26 27 26	RECEPTACLE, 6-30R, 250V
	REC-SIM-650R	26 27 26	RECEPTACLE, 6-50R, 250V
	REC-SIM-720R	26 27 26	RECEPTACLE, 7-20R, 277V
	REC-SIM-730R	26 27 26	RECEPTACLE, 7-30R, 277V
	REC-SIM-750R	26 27 26	RECEPTACLE, 7-50R, 277V
	REC-SIM-1420R	26 27 26	RECEPTACLE, 14-20R, 125/250V
	REC-SIM-1430R	26 27 26	RECEPTACLE, 14-30R, 125/250V
	REC-SIM-1450R	26 27 26	RECEPTACLE, 14-50R, 125/250V
	REC-SIM-1460R	26 27 26	RECEPTACLE, 14-60R, 125/250V
	REC-SIM-1520R	26 27 26	RECEPTACLE, 15-20R, 250V, 3PH
	REC-SIM-1530R	26 27 26	RECEPTACLE, 15-30R, 250V, 3PH
	REC-SIM-1550R	26 27 26	RECEPTACLE, 15-50R, 250V, 3PH
	REC-SIM-1560R	26 27 26	RECEPTACLE, 15-60R, 250V, 3PH
	REC-QUAD	26 27 26	QUAD RECEPTACLE, 125V
	REC-QUAD-GFI	26 27 26	QUAD GFI RECEPTACLE, 125V

ELECTRICAL ABBREVIATION KEY

ABBR:	DESCRIPTION:
AFF	ABOVE FINISHED FLOOR
C	CONDUIT
GFI	GROUND FAULT INTERRUPTER
N.C.	NORMALLY CLOSED
NIC	NOT IN CONTRACT
N.O.	NORMALLY OPEN
SV	SOLENOID VALVE
TYP	TYPICAL
UON	UNLESS OTHERWISE NOTED

LUMINAIRE SYMBOL KEY

SYMBOL:	DESCRIPTION:
	NORMAL BRANCH LUMINAIRE
	EMERGENCY BRANCH LUMINAIRE BACKED UP BY GENERATOR
	NIGHT LIGHT BRANCH LUMINAIRE

VIEW KEY

NAME — LEVEL NAME
10'-0" — HEIGHT ABOVE PROJECT 0'-0"

1 — INDICATES NOTE USED TO DESCRIBE ADDITIONAL INFORMATION ABOUT WORK REQUIRED, SPECIFIC TO THE SHEET AND/OR DETAIL

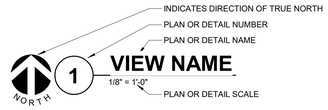

LINE TYPE AND TAG KEY:

NEW WORK BY THIS CONTRACTOR (WIDE LINE)
NEW
EXISTING TO BE REMOVED (SHORT DASHED PATTERN)
NEW UNDERFLOOR OR UNDERGROUND (LONG DASHED PATTERN)

EXISTING TO REMAIN OR WORK BY OTHERS (NARROW LINE)
EXISTING
EXISTING TO BE REMOVED BY OTHERS (SHORT DASHED PATTERN)
EXISTING UNDERFLOOR OR UNDERGROUND (LONG DASHED PATTERN)

HALFTONING DOES NOT MODIFY SCOPE.

'TAG'-E — TAGS WITH DASH 'E' INDICATES THE REFERENCED OBJECT IS EXISTING

TAG — UNDERLINED TAG INDICATES OBJECT IS IN-SCOPE. IF NEW, ADDITIONAL INFORMATION IS AVAILABLE IN A SCHEDULE, MATERIAL LIST, OR SYMBOL LIST

INDICATES AN EXISTING SYSTEM'S POINT OF CONNECTION/REMOVAL

APPLICABLE CODES

CONTRACTOR SHALL COMPLY WITH APPLICABLE CODES AND LOCAL AMENDMENTS.

BUILDING CODE:	IBC 2018 EDITION
FIRE CODE:	IFC 2018 EDITION
PLUMBING CODE:	UPC 2018 EDITION
MECHANICAL CODE:	UMC 2018 EDITION
ELECTRICAL CODE:	NFPA 70 (NEC) 2017 EDITION
LIFE SAFETY CODE:	NFPA 101 2017 EDITION
ENERGY CONSERVATION CODE:	IECC 2018
HEALTH DEPARTMENT CODE:	CURRENT EDITION
LOCAL BUILDING CODE:	CURRENT EDITION

ELECTRICAL SHEET INDEX

E0.00	ELECTRICAL COVERSHEET
E0.10	ELECTRICAL DIAGRAMS
E0.11	ELECTRICAL DIAGRAMS
E0.20	PANEL SCHEDULES
E0.21	ELECTRICAL SCHEDULES
E0.30	LUMINAIRE SCHEDULE
E1.00	SITE PLAN - ELECTRICAL
E2.00	OVERALL CEILING PLAN - LIGHTING
E2.10	OVERALL FLOOR PLAN - POWER
E3.00	OVERALL ROOF PLAN - POWER
E8.01	ELECTRICAL IECC
GRAND TOTAL: 11	

DESIGN BUILD FIRE ALARM SYSTEM:

FIRE ALARM: THE FIRE ALARM SHALL BE PROVIDED ON A SEPARATE PERMIT. PROVIDE A COMPLETE, NEW FIRE ALARM DETECTION AND ALARM SYSTEM WITH CLASS 1 CIRCUITING AS REQUIRED BY LOCAL FIRE MARSHAL. CONTROL PANEL SHALL INCLUDE INTEGRAL STANDBY BATTERIES, CHARGER AND MUNICIPAL TIE MODULE OR AGENCY APPROVED AUTO-DIALER CONNECTED TO THE TELEPHONE SYSTEM (CONNECTION AND MONITORING CHARGES BY OWNER). SUBMIT PROPOSED DESIGN TO FIRE MARSHAL FOR APPROVAL PRIOR TO ROUGH-IN. AFTER PLANS HAVE BEEN APPROVED BY THE FIRE MARSHAL, PROVIDE (1) SET OF STAMPED DRAWINGS ALONG WITH AN APPROVED EQUIPMENT SUBMITTAL TO THE ELECTRICAL ENGINEER FOR THEIR RECORDS. ALL CONNECTIONS TO SYSTEM SHALL BE PERFORMED BY FACTORY-CERTIFIED TECHNICIAN AND SHALL BE ACCEPTED BY OWNER'S SYSTEM-MONITORING AGENCY. THE CONTRACTOR SHALL PROVIDE A COMPLETE FIRE ALARM SYSTEM INCLUDING, BUT NOT LIMITED TO INITIATING DEVICES, DUCT DETECTORS, ADA HORN/STROBES, ETC. AND BE IN FULL COMPLIANCE WITH ALL LOCAL, STATE AND ADA REQUIREMENTS.

1. PHYSICALLY AT SITE. REVIEW ALL DRAWINGS. INCLUDING THOSE OF OTHER TRADES.

ELECTRICAL GENERAL NOTES:

1. "NL" INDICATES LUMINAIRE IS UNSWITCHED FOR NIGHT LIGHT.
2. "SE" INDICATES LUMINAIRE IS SWITCHED/CONTROLLED DURING NORMAL OPERATION AND OPERATES FROM EMERGENCY BATTERY (EXTEND UNSWITCHED CIRCUIT LEG TO BATTERY) UPON LOSS OF POWER.
3. SHADED LUMINAIRE OR DEVICE INDICATES LUMINAIRE OR DEVICE IS CONNECTED TO AN EMERGENCY CIRCUIT.
4. REFER TO SHEET E0.30 FOR LUMINAIRE SCHEDULE.
5. VACANCY/OCCUPANCY SENSOR LAYOUT: SENSORS ARE SHOWN ON THE PLANS FOR DESIGN INTENT AND MAY NOT REPRESENT EVERY DEVICE. PROVIDE MANUFACTURER SPECIFIC FLOOR PLAN LAYOUTS SHOWING LOCATION, ORIENTATION, AND COVERAGE AREA OF EACH CONTROL DEVICE, SENSOR, AND CONTROLLER/INTERFACE. AREAS REQUIRING MULTIPLE SENSOR DEVICES FOR APPROPRIATE COVERAGE, SUBMIT SPECIFIC MANUFACTURER-APPROVED SENSOR LAYOUT AS AN OVERLAY DIRECTLY ON THE PROJECT DRAWINGS, EITHER IN PRINT OR APPROVED ELECTRONIC FORM.

LUMINAIRE KEY:

LUMINAIRE
F1 = FIXTURE TAG
1 = CIRCUIT NUMBER
a = SWITCH DESIGNATION
NL = SUBSCRIPT (IF APPLICABLE)
Z = ZONE DESIGNATION

*IF LABEL IS ORIENTED HORIZONTALLY A SLASH WILL SEPARATE THIS INFORMATION. EX: F1 / 1 / a / NL

DEVICE KEY:

DEVICE
A = MOUNTING (IF APPLICABLE)
1 = CIRCUIT NUMBER

*IF LABEL IS ORIENTED HORIZONTALLY A SLASH WILL SEPARATE THIS INFORMATION. EX: A / 1

ELECTRICAL MOUNTING SUBSCRIPT KEY:

A	MOUNT AT +6" TO CENTERLINE ABOVE COUNTER OR BACKSPLASH
C	MOUNT AT CEILING
H	MOUNT ORIENTED HORIZONTALLY
L	MOUNT IN CASEWORK
M	MOUNT IN MODULAR FURNITURE
R	MOUNT IN SURFACE RACEWAY
EWC	ELECTRIC WATER COOLER

ELECTRICAL INSTALLATION NOTES:

1. THE COMPLETE INSTALLATION SHALL BE IN ACCORDANCE WITH THE ADA STANDARDS FOR ACCESSIBLE DESIGN. REFER TO THE ADA GUIDELINES FOR ALL CONFIGURATION DETAILS ON THIS PAGE FOR ADDITIONAL INFORMATION.
2. CIRCUIT NUMBERS ARE SHOWN FOR CIRCUIT IDENTIFICATION. CIRCUITING SHALL AGREE WITH NUMBERING ON THE PANEL PROVIDED. COMMON NEUTRALS MAY NOT BE USED FOR BRANCH CIRCUITS. BALANCE THE LOAD ON PANEL AS EVENLY AS POSSIBLE BETWEEN EACH PHASE.
3. EMERGENCY BRANCH WIRING FOR FEEDERS AND BRANCH CIRCUITS SHALL BE ROUTED IN SEPARATE RACEWAY ,JUNCTION BOXES, PULL BOXES, AND CABINETS. WIRING FOR EACH BRANCH SHALL BE INDEPENDENT FROM OTHER BRANCHES, INCLUDING THE NORMAL BRANCH.
4. FLUSH MOUNT ALL LIGHTING CONTROL DEVICES AT +42" FROM FLOOR (CENTERLINE DIMENSION), EXCEPT WHERE OTHERWISE NOTED. DEVICES MAY BE SURFACE MOUNTED WHEN CONDUIT IS SPECIFIED EXPOSED.
5. FLUSH MOUNT ALL DUPLEX RECEPTACLES AND TECHNOLOGY OUTLETS AT +18" FROM FLOOR (CENTERLINE DIMENSION), EXCEPT WHERE OTHERWISE NOTED. RECEPTACLES AND OUTLETS MAY BE SURFACE MOUNTED WHEN CONDUIT IS SPECIFIED EXPOSED. MOUNT EXTERIOR LOCATED RECEPTACLES WITH WHILE-IN-USE COVERS AT +20" FROM FINISHED GRADE (CENTER DIMENSIONS) TO MAINTAIN INSTALLATION ADA COMPLIANCE.
6. ALL MATERIALS USED TO SEAL PENETRATIONS OF FIRE RATED WALLS AND FLOORS SHALL BE TESTED AND CERTIFIED AS A SYSTEM PER ASTM E814 STANDARDS FOR FIRE TESTS OF THROUGH-PENETRATION FIRESTOPS. REFER TO 26 05 03 FOR ADDITIONAL INFORMATION AND REQUIREMENTS SPECIFIC TO FIRESTOPPING.
7. CONNECTION FOR ELECTRIC WATER COOLERS (EWC) SHALL BE A JUNCTION BOX CONCEALED BEHIND WATER COOLER ACCESS PLATE OR BE A GFI RECEPTACLE LOCATED DIRECTLY BELOW AND CENTERED ON EWC. CONTRACTOR SHALL VERIFY TYPE OF EWC TO BE INSTALLED.
8. MOUNT ALL FIRE ALARM PULL STATIONS AT +42" FROM FLOOR (CENTERLINE DIMENSION) EXCEPT WHERE OTHERWISE NOTED.
9. INSTALL ALL WALL MOUNTED FIRE ALARM NOTIFICATION DEVICES AT 90" ABOVE FINISHED FLOOR OR 6" BELOW THE CEILING, WHICHEVER IS LOWER, EXCEPT WHERE OTHERWISE NOTED. HEIGHT SHALL BE MEASURED TO THE TOP OF THE DEVICE.
10. CONTRACTOR SHALL COORDINATE THE LOCATION OF ALL CEILING MOUNTED DEVICES AND EQUIPMENT WITH LUMINAIRES, SPRINKLER, AND CEILING DIFFUSERS. CENTER ALL DEVICES IN CEILING TILE PATTERN. SMOKE DETECTORS AND OCCUPANCY/VACANCY SENSORS SHALL BE LOCATED NO CLOSER THAN 3 FEET TO AN AIR SUPPLY DIFFUSER OR RETURN GRILLE.
11. CONTRACTOR SHALL VERIFY ALL FURNITURE, MODULAR FURNITURE, AND EQUIPMENT LOCATIONS WITH ARCHITECTURAL PLANS, ELEVATIONS, AND REVIEWED SHOP DRAWINGS. PRIOR TO MAKING THE ACTUAL ELECTRICAL INSTALLATION, THIS CONTRACTOR SHALL ADJUST RECEPTACLES, OUTLETS, OR CONNECTION LOCATIONS TO ACCOMMODATE FURNITURE AND/OR EQUIPMENT.
12. ELECTRICAL AND TECHNOLOGY EQUIPMENT SHALL BE MOUNTED TO AVOID IMPEDANCE OF, OPERATION OF, AND/OR ACCESS TO ELECTRICAL AND MECHANICAL EQUIPMENT. ALL MOUNTING OF ELECTRICAL AND TELECOMMUNICATIONS EQUIPMENT, ON EQUIPMENT SUPPLIED BY ANOTHER CONTRACTOR, SHALL BE APPROVED IN ADVANCE BY THE OTHER CONTRACTOR.
13. CONTRACTOR SHALL BE RESPONSIBLE FOR ALL OPENINGS REQUIRED IN WALLS. ALL OPENINGS SHALL BE REPAIRED TO MATCH EXISTING BY A QUALIFIED CONTRACTOR AT THE EXPENSE OF THIS CONTRACTOR. ALL CONDUITS THROUGH WALLS SHALL BE GROUTED OR SEALED INTO OPENINGS.
14. ALL WELDING SHALL BE ACCORDING TO AMERICAN WELDING SOCIETY STANDARDS. CONTRACTOR SHALL FURNISH TO THE ARCHITECT/ENGINEER CERTIFICATES QUALIFYING EACH WELDER, PRIOR TO START OF WORK. THE ARCHITECT/ENGINEER RESERVES THE RIGHT TO REQUIRE QUALIFYING DEMONSTRATION, AT THE CONTRACTOR'S EXPENSE, OF ANY WELDERS ASSIGNED TO THE JOB.
15. EACH CONTRACTOR IS RESPONSIBLE FOR DAMAGE CAUSED BY THEIR ACTIONS TO THE WALLS, FLOORS, CEILINGS, AND ROOFS. THE CONTRACTOR WHOSE WORK CAUSES DAMAGE IS RESPONSIBLE FOR PATCHING TO MATCH ORIGINAL CONSTRUCTION, FIRE RATING, AND FINISH.
16. REFER TO ARCHITECTURAL REFLECTED CEILING PLAN, ELECTRICAL, TECHNOLOGY AUDIO/VISUAL, AND OTHER ELECTRICAL PLANS FOR EXACT LOCATIONS OF ALL CEILING MOUNTED DEVICES, OTHER THAN SPRINKLERS.
17. ELECTRICAL IDENTIFICATION. REFER TO SPECIFICATION SECTION 26 05 53 FOR COLOR/LABEL REQUIREMENTS FOR CONDUIT, BOX, CABLE/WIRE, AND EQUIPMENT.

TYPICAL NEW CONSTRUCTION:

1. COORDINATE LUMINAIRES IN MECHANICAL ROOMS WITH DUCTWORK, PIPING AND ANY MECHANICAL EQUIPMENT. PROVIDE LUMINAIRE WITH CHAINS OR HANGER KIT WHERE REQUIRED. BOTTOM OF FIXTURE TO ALIGN WITH BOTTOM OF NEAREST BEAM/TRUSS. COORDINATE MOUNTING PRIOR TO ORDERING LUMINAIRES.
2. COORDINATE ALL LUMINAIRE LOCATIONS WITH STRUCTURAL TRUSS AND BEAMS PRIOR TO ROUGH-IN.
3. LUMINAIRES SHALL BE TARGETED AND ADJUSTED BY THE CONTRACTOR UNDER THE OBSERVATION AND IN COMPLIANCE WITH RECOMMENDATIONS OF THE ENGINEER. ALL LABOR AND MATERIAL COSTS MADE NECESSARY BY THIS REQUIREMENT SHALL BE INCLUDED.

TYPICAL NEW CONSTRUCTION:

1. SITE HAS UNDERGROUND UTILITIES, STEAM, WATER, ELECTRIC AND VAULTS. POLE LOCATIONS HAVE BEEN COORDINATED WITH CIVIL PLANS. CONTRACTOR SHALL FIELD VERIFY ALL UNDERGROUND UTILITIES PRIOR TO INSTALLING ALL LIGHT POLES. HAND EXCAVATE IF NECESSARY, TO ASCERTAIN EXACT LOCATION OF UNDERGROUND UTILITIES PRIOR TO INSTALLING ANY POLE.
2. WHERE LUMINAIRE QUANTITIES OR LAYOUT DIFFER BETWEEN ELECTRICAL LIGHTING PLANS AND ARCHITECTURAL REFLECTED CEILING PLANS, HIGHER QUANTITY SHALL TAKE PRECEDENCE. CONTRACTOR SHALL CONFIRM QUANTITY AND LAYOUT WITH DESIGN TEAM.
3. #B PUSH BUTTON REFERS TO SCENE QUANTITY. COORDINATE NUMBER OF BUTTONS FOR CONTROL STATIONS WITH LIGHTING CONTROL MANUFACTURER. CONTROL SHALL BE CAPABLE OF DIMMING UP/DOWN AND SWITCHING ON/OFF FOR MULTIPLE ZONES AS INDICATED AND PER LIGHTING SEQUENCE OF OPERATIONS.
4. Z## INDICATES ZONING AND REFLECTS A LIGHTING CONTROL GROUP. PROVIDE RELAYS AS REQUIRED TO ALLOW LUMINAIRES WITHIN THE DEFINED ZONE TO FUNCTION TOGETHER DURING NORMAL POWER.

tsk
314 South Water Street,
Suite 100
Henderson, NV 89015
phone: 702.456.3000
fax: 702.898.6209
www.tska.com

PROFESSIONAL ENGINEER — STATE OF NEVADA
VENKATESH THAMALA JANARDHANAN
Exp:06/30/2025
ELECTRICAL
No. 030510
01/03/2024

THESE DRAWINGS AND SPECIFICATIONS ARE THE PROPERTY OF TATE SNYDER KIMSEY ARCHITECTS AND MAY NOT BE REPRODUCED OR USED FOR ANY PURPOSE WITHOUT THE ARCHITECTS WRITTEN CONSENT. AS INSTRUMENTS OF SERVICE, THESE DOCUMENTS ARE NOT FINAL AND READY FOR USE, AND THEREFORE NOT VALID, UNLESS THEY ARE SEALED, SIGNED AND DATED.

Consultant

IMEG
www.imegcorp.com
4589 LONGLEY LANE
RENO, NV 89502
P: 775.826.4889
PROJECT #22007707.00

IMEG CORP. RESERVES PROPRIETARY RIGHTS, INCLUDING COPYRIGHTS, TO THIS DRAWING AND THE DATA SHOWN THEREON. SAID DRAWING AND/OR DATA ARE THE EXCLUSIVE PROPERTY OF IMEG CORP. AND SHALL NOT BE USED OR REPRODUCED FOR ANY OTHER PROJECT WITHOUT THE EXPRESS WRITTEN APPROVAL AND PARTICIPATION OF IMEG CORP. ©2022 IMEG CORP.

0 1 2 3
REF. SCALE IN INCHES — PROJECT #22007707.00

PLEASE RECYCLE

Project
SPARKS FIRE STATION #6

6963 WINGFIELD HILLS ROAD, SPARKS, NV 89436

Job No: 22-043

Owner
CITY OF SPARKS

CITY OF SPARKS FIRE DEPARTMENT Est. 1905

BID SET

REVISIONS

REV	DATE	DESCRIPTION
1	05/31/23	Plan Check Responses

Sheet Title
ELECTRICAL COVERSHEET

Date: 01/04/2024
Sheet No:
E0.00

ELECTRICAL - RISER DIAGRAM NOTES:

1. THE RISER DIAGRAM IS INTENDED TO CONVEY THE COMPONENTS OF THE ELECTRICAL DISTRIBUTION SYSTEM. REFER TO ELECTRICAL DRAWINGS, DETAILS, DISTRIBUTION / PANEL / EQUIPMENT / EQUIPMENT CONNECTION SCHEDULES, AND SPECIFICATIONS FOR ADDITIONAL INFORMATION.
2. SHORT CIRCUIT CURRENT RATINGS (SCCR) FOR EQUIPMENT ARE MINIMUM REQUIREMENTS FOR BUSS BRACING AND DEVICE RATING. ALL EQUIPMENT SHALL BE FULLY RATED UNLESS SPECIFICALLY NOTED AS SERIES RATED.
3. TRANSFER SWITCHES (SCCR) RATINGS ARE INTENDED AS WITHSTAND AND CLOSE RATINGS (WCR).
4. THE BASIS OF DESIGN: THE CONTRACTOR SHALL BE RESPONSIBLE FOR DERATING AND SIZING CONDUCTORS AND CONDUITS TO EQUAL OR EXCEED AMPACITY OF THE BASIS OF DESIGN CIRCUITS WHEN ALTERNATIVE METHODS OR MATERIALS OTHER THAN THE BASIS OF DESIGN ARE APPLIED.
   a. RACEWAY: EMT UNLESS OTHERWISE NOTED
   b. FEEDER CHARACTERISTICS: ALL CURRENT CARRYING CONDUCTORS SHALL BE COPPER UNLESS NOTED OTHERWISE. CONDUCTOR SIZES ARE BASED ON AMERICAN WIRE GAUGE AWG AND KCMIL THOUSANDS OF CIRCULAR MIL. REFER TO SPECIFCIATION SECTION 25 05 13 WIRE AND CABLE FOR ADDITIONAL INFORMATION
   c. GROUNDING AND BONDING CONDUCTORS SHALL BE COPPER.
   d. CONDUCTORS (MOTORS): COPPER
   e. [AL] INDICATES ALUMINUM CONDUCTOR
   f. [BLANK] OR [CU] INDICATES COPPER CONDUCTOR
   g. [CI] INDICATES CIRCUIT INTEGRITY CIRCUIT. FEEDER ROUTED OUTSIDE BUILDING OR 2 HOUR FIRE RATED.
5. PROVIDE GROUNDING ELECTRODE AND BONDING SYSTEM PER CODE REQUIREMENTS. PROVIDE THE FOLLOWING MINIMUM CONNECTIONS AND COMPONENTS: REFER TO SPECIFICATION SECTION 26 05 26 GROUNDING AND BONDING AND DETAILS WHEN APPLICABLE:
   a. ELECTRICAL GROUND FIELD
   b. CONCRETE-ENCASED GROUNDING ELECTRODE (UFER)
   c. METALLIC WATER MAIN
   d. BUILDING STEEL, EFFECTIVELY GROUNDED
   e. INTERSYSTEM BONDING TERMINAL (IBT)
   f. GROUND RING ENCIRCLING STRUCTURE
6. DRY TYPE TRANSFORMER AND SEPARATELY DERIVED SYSTEMS. PROVIDE GROUNDING ELECTRODE CONDUCTOR FOR SEPARATELY DERIVED SYSTEM. ROUTE TO STRUCTURAL BUILDING STEEL WHEN AVAILABLE. OTHERWISE ROUTE TO MAIN GROUNDING ELECTRODE SYSTEM.
7. PROVIDE O.Z. GEDNEY OR EQUAL GROUND BUSHING FOR ALL SERVICE AND FEEDER RACEWAYS BONDED TO GROUND BUS WITH CONDUCTOR SIZED TO MAXIMUM FEEDER GROUND CAPACITY.
8. CONDUCTORS AND GROUND SIZES ON THE LINE AND LOAD SIDES OF ALL DISCONNECT SWITCHES SHALL BE IDENTICAL UNLESS NOTED OTHERWISE.
9. REFER TO COVER SHEET FOR ADDITIONAL EQUIPMENT TAG INFORMATION (SPD-#, M-#, ETC).
10. REFER TO GROUNDING ELECTRODE SYSTEM AND BONDING DETAILS
    a. EGC – EQUIPMENT GROUNDING CONDUCTOR
    b. GEC – GROUNDING ELECTRODE CONDUCTOR
    c. SSBJ – SUPPLY SIDE BONDING JUMPER
11. CIRCUIT BREAKER CHARACTERISTICS AND ACCESSORIES:
    a. [CB] INDICATES CIRCUIT BREAKER
    b. [FU] INDICATES FUSED SWITCH
    c. [NF] INDICATES NON-FUSED SWITCH
    d. [MLO] INDICATES MAIN LUG ONLY
    e. [MCB] INDICATES MAIN CIRCUIT BREAKER
    f. [MCCB] INDICATES MOLDED CASE CIRCUIT BREAKER
    g. [LSIG] INDICATES FEATURES PROVIDED WITH SOLID STATE CIRCUIT BREAKER [LONG TIME (W/DELAY), SHORT TIME (W/DELAY), INSTANTANEOUS, GROUND FAULT]
    h. [LSIA] INDICATES FEATURES PROVIDED WITH SOLID STATE CIRCUIT BREAKER [LONG TIME (W/DELAY), SHORT TIME (W/DELAY), INSTANTANEOUS, GROUND FAULT ALARM (NO GROUND FAULT TRIP)]
    i. [GF] INDICATES GROUND FAULT RELAY
    j. [AER] INDICATES ARC ENERGY REDUCTION SYSTEM
    k. [100% RATED] INDICATES INSULATED CASE BREAKER RATED FOR FULL CONTINUOUS CAPACITY OF CIRCUIT BREAKER NAMEPLATE
    l. [DRAW] INDICATES DRAWOUT DEVICES
    m. [LOCK] INDICATES PADLOCK HASP
    n. [RED] INDICATES RED HANDLE
    o. [SHUNT] INDICATES SHUNT TRIP BREAKER
    p. [KIRK] INDICATES KIRK KEY

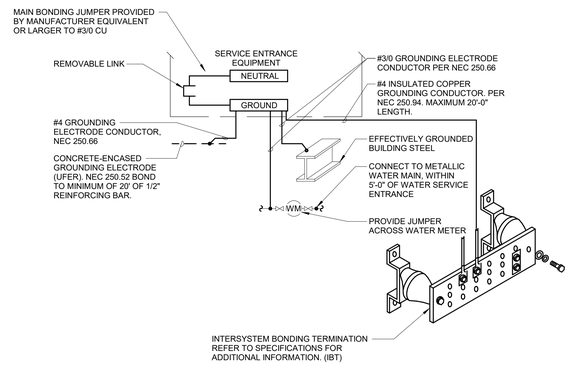

NOTES.

1. 1. REFER TO SPECIFICATION SECTION 26 05 26 GROUNDING AND BONDING

2 SERVICE ENTRANCE GROUNDING ELECTRODE SYSTEM DETAIL

NO SCALE

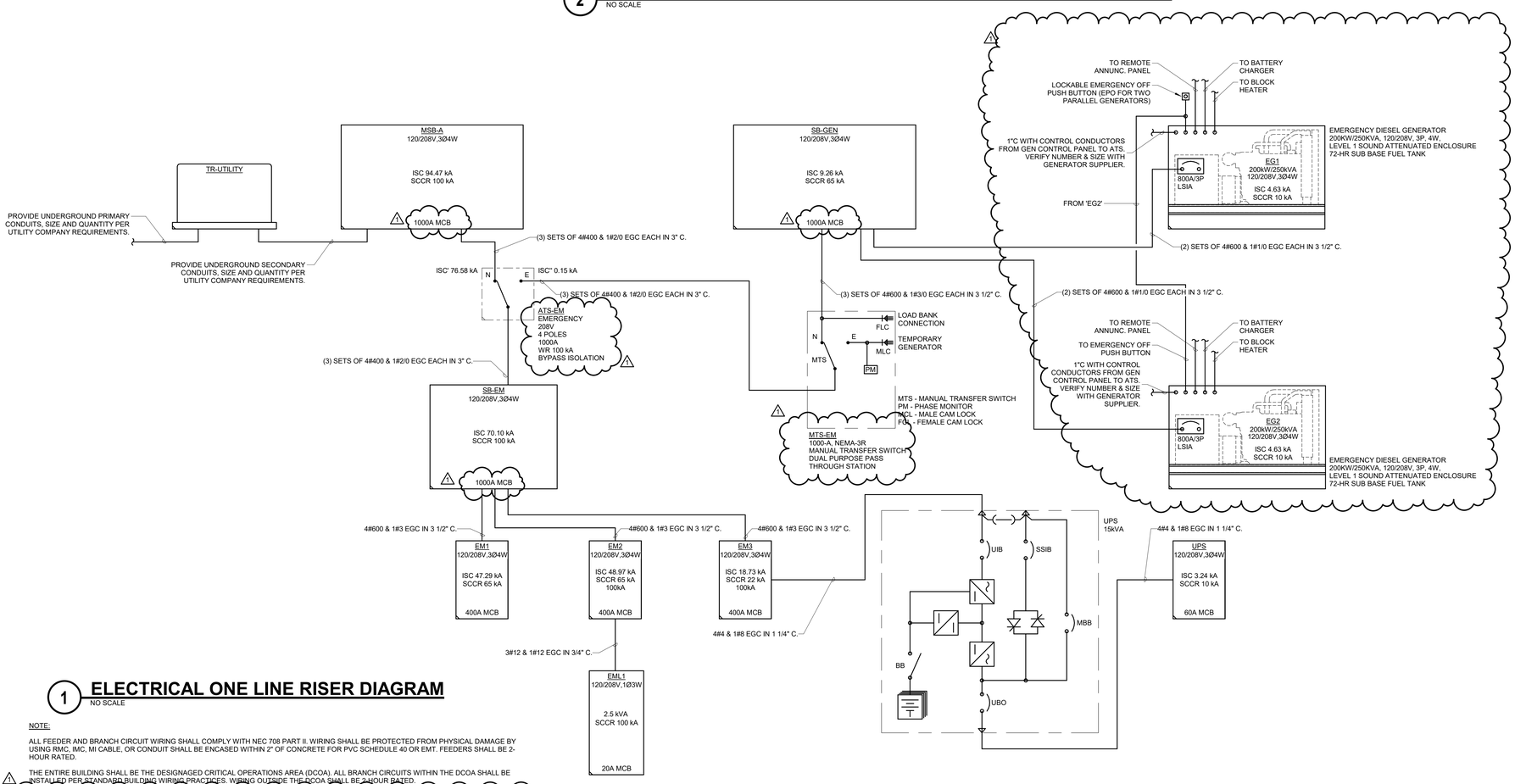

1 ELECTRICAL ONE LINE RISER DIAGRAM

NO SCALE

NOTE:

ALL FEEDER AND BRANCH CIRCUIT WIRING SHALL COMPLY WITH NEC 708 PART II. WIRING SHALL BE PROTECTED FROM PHYSICAL DAMAGE BY USING RMC, IMC, MI CABLE, OR CONDUIT SHALL BE ENCASED WITHIN 2" OF CONCRETE FOR PVC SCHEDULE 40 OR EMT. FEEDERS SHALL BE 2-HOUR RATED.

THE ENTIRE BUILDING SHALL BE THE DESIGNAGED CRITICAL OPERATIONS AREA (DCOA). ALL BRANCH CIRCUITS WITHIN THE DCOA SHALL BE INSTALLED PER STANDARD BUILDING WIRING PRACTICES. WIRING OUTSIDE THE DCOA SHALL BE 2-HOUR RATED.

PROVIDE PERMANENT PLAQUE OR DIRECTORY DENOTING ALL ELECTRIC POWER SOURCES ON OR IN THE PREMISES. PLAQUE OR DIRECTORY SHALL BE INSTALLED AT EACH SERVICE EQUIPMENT LOCATION AND AT LOCATIONS OF ALL ELECTRIC POWER PRODUCTION SOURCES CAPABLE OF BEING INTERCONNECTED PER NEC 705.12.

GENERATOR AND FUEL TANK SHALL BE UL 2200 LISTED. PROVIDE WITH MANUFACTUR CONTROLLER TO OVERSEE PARALLELING BETWEEN EG1 AND EG2. GENERATORS, ASSOCIATED DISTRIBUTION EQUIPMENT, FUEL TANK AND ALL ACCESSORIES SHALL COMPLY WITH NFPA 110. CONDUIT SECTIONS SHALL BE FLEXIBLE BETWEEN GENERATORS AND TRANSFER SWITCH. THE CONTROL AND ANNUNCIATOR PANELS AND ANY ACCESSORIES. EACH FUEL TANK SHALL BE SUFFICIENT TO SUPPLY THE DISTRIBUTION EQUIPMENT FOR UP TO 72 HOURS WITHOUT NEEDING TO REFUEL. FUEL LINES BETWEEN PRIME MOVER AND FUEL PIPING SHALL BE OF APPROVED, FLEXIBLE TYPE. GALVANIZED FUEL LINES ARE NOT PERMITTED.

tsk

314 South Water Street,
Suite 100
Henderson, NV 89015
phone: 702.456.3000
fax: 702.898.6209
www.tska.com

PROFESSIONAL ENGINEER — STATE OF NEVADA
VENKATESH THIRUMALAI JANARDHANAN
Exp:06/30/2025
ELECTRICAL
No. 030510
01/03/2024

THESE DRAWINGS AND SPECIFICATIONS ARE THE PROPERTY OF TATE SNYDER KIMSEY ARCHITECTS AND MAY NOT BE REPRODUCED OR USED FOR ANY PURPOSE WITHOUT THE ARCHITECTS WRITTEN CONSENT. AS INSTRUMENTS OF SERVICE, THESE DOCUMENTS ARE NOT FINAL AND READY FOR USE, AND THEREFORE NOT VALID, UNLESS THEY ARE SEALED, SIGNED AND DATED.

Consultant

IMEG
www.imeg.com
4599 LONGLEY LANE
RENO, NV 89502
P: 775.826.4899
PROJECT #22007707.00

IMEG CORP. RESERVES PROPRIETARY RIGHTS, INCLUDING COPYRIGHTS, TO THIS DRAWING AND THE DATA SHOWN THEREON. SAID DRAWING AND/OR DATA ARE THE EXCLUSIVE PROPERTY OF IMEG CORP. AND SHALL NOT BE USED OR REPRODUCED FOR ANY OTHER PROJECT WITHOUT THE EXPRESS WRITTEN APPROVAL AND PARTICIPATION OF IMEG CORP. ©2022 IMEG CORP.

0 1 2 3
REF. SCALE IN INCHES PROJECT #22007707.00

PLEASE RECYCLE

Project

SPARKS FIRE STATION #6

6963 WINGFIELD HILLS ROAD,
SPARKS, NV 89436

Job No: 22-043

Owner

CITY OF SPARKS

CITY OF SPARKS FIRE DEPARTMENT Est. 1905

BID SET

REVISIONS		
REV	DATE	DESCRIPTION
1	05/31/23	Plan Check Responses

Sheet Title

ELECTRICAL DIAGRAMS

Date: 01/04/2024

Sheet No:

E0.10

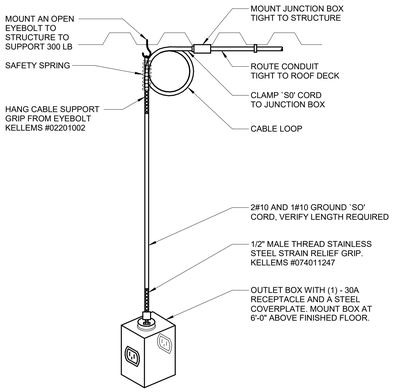

1 DROP CORD MOUNTING
NO SCALE

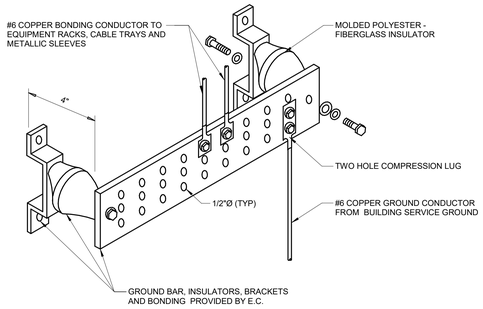

3 GROUND BAR (GB) AND INTERSYSTEM BONDING TERMINAL (IBT) DETAIL
NO SCALE

NOTES:

1. MOUNT BAR AT +6'-6" A.F.F.
2. STANDOFF INSULATORS MUST BE PROVIDED WHEN ZONING THE BAR.

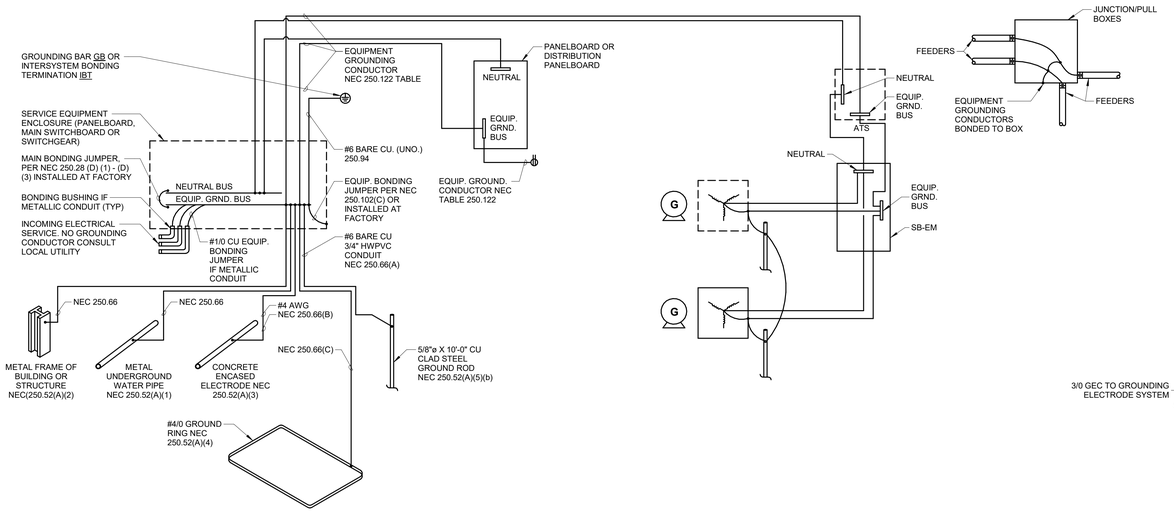

4 ELECTRICAL SYSTEM GROUNDING DETAIL
NO SCALE

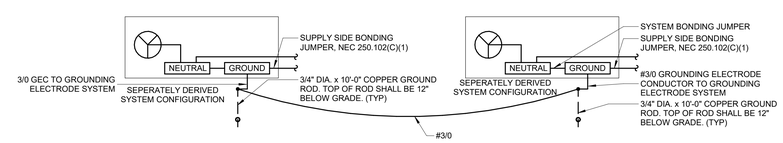

5 GENERATOR GROUNDING DETAIL
NO SCALE

tsk
314 South Water Street,
Suite 100
Henderson, NV 89015
phone: 702.456.3000
fax: 702.898.6209
www.tska.com

THESE DRAWINGS AND SPECIFICATIONS ARE THE PROPERTY OF TATE SNYDER KIMSEY ARCHITECTS AND MAY NOT BE REPRODUCED OR USED FOR ANY PURPOSE WITHOUT THE ARCHITECTS WRITTEN CONSENT. AS INSTRUMENTS OF SERVICE, THESE DOCUMENTS ARE NOT FINAL AND READY FOR USE, AND THEREFORE NOT VALID, UNLESS THEY ARE SEALED, SIGNED AND DATED.

Consultant

IMEG
www.imegcorp.com
4599 LONGLEY LANE
RENO, NV 89502
P: 775.828.4599
PROJECT #22007707.00

IMEG CORP. RESERVES PROPRIETARY RIGHTS, INCLUDING COPYRIGHTS, TO THIS DRAWING AND THE DATA SHOWN THEREON. SAID DRAWING AND/OR DATA ARE THE EXCLUSIVE PROPERTY OF IMEG CORP. AND SHALL NOT BE USED OR REPRODUCED FOR ANY OTHER PROJECT WITHOUT THE EXPRESS WRITTEN APPROVAL AND PARTICIPATION OF IMEG CORP. ©2022 IMEG CORP.

0 1 2 3
REF. SCALE IN INCHES PROJECT #22007707.00

PLEASE RECYCLE

Project
SPARKS FIRE STATION #6

6963 WINGFIELD HILLS ROAD, SPARKS, NV 89436

Job No: 22-043

Owner
CITY OF SPARKS

BID SET

REVISIONS		
REV	DATE	DESCRIPTION

Sheet Title
ELECTRICAL DIAGRAMS

Date: 01/04/2024
Sheet No:

E0.11

SWITCHBOARD MSB-A

ENCLOSURE: NEMA 3R
FED FROM: 1,200 A/3P @ TR-UTILITY

SOLID NEUTRAL GROUND BUS

MAIN: 1,000 A MCB
VOLTS: 120/208 Wye
PHASE: 3
WIRE: 4
SCCR: 100 kA
ISC: 94,470 A

NOTES:

CKT	LOAD DESCRIPTION	LOAD	POLES	FRAME	TRIP	TYPE	ACC.	WIRE AND RACEWAY	CIRCUIT KEY
1	ATS-EM	284.62 kVA	3	1,000 A	1,000 A	LSIG		(3) SETS OF 4#400 & 1#2/0 EGC EACH IN 3" C.	
2	200KA SPD	0 kVA	3	30 A	30 A	--	--	--	--
3	SPARE	0 kVA	3	250 A	250 A	--	--	--	--
4	SPARE	0 kVA	3	250 A	250 A	--	--	--	--

LOAD SUMMARY (INCLUDES ALL TUBS IN THIS PANEL)

LOAD CLASSIFICATION	CONNECTED LOAD	DEMAND FACTOR	ESTIMATED DEMAND	TOTALS*	
Dwelling Lighting	1.16 kVA	100.00%	1.16 kVA		
HVAC	72.025 kVA	100.00%	72.025 kVA	TOTAL CONNECTED LOAD:	284.62 kVA
HVAC Heating Only	12.408 kVA	100.00%	12.408 kVA	TOTAL ESTIMATED DEMAND LOAD:	253.349 kVA
Kitchen Equip.	5.8 kVA	80.86%	4.69 kVA	TOTAL CONNECTED AMPS:	790.02 A
Lighting	9.556 kVA	100.00%	9.556 kVA	TOTAL ESTIMATED DEMAND AMPS:	703.2 A
Motor	87.568 kVA	100.00%	87.568 kVA		
Other	0 kVA	0.00%	0 kVA		
Power	19.302 kVA	100.00%	19.302 kVA		
Receptacles	70.32 kVA	57.11%	40.16 kVA		
Receptacles - Dwelling Units	6.48 kVA	100.00%	6.48 kVA		

*TOTAL DEMAND CALCS SUBTRACT ANY REDUNDANT LOAD AND THE SMALLER OF ANY NONCOINCIDENT HVAC LOADS. THIS CALC IS DONE AT EACH PANEL.

CIRCUIT KEY NOTES:

DIST. SB-EM

ENCLOSURE: NEMA 1
FED FROM: 1,000 A/3P @ ATS-EM
LOCATION: CREW 129

SOLID NEUTRAL GROUND BUS

MAIN: 1,000 A MCB
VOLTS: 120/208 Wye
PHASE: 3
WIRE: 4
SCCR: 100 kA
ISC: 70,101 A

NOTES:

CKT	LOAD DESCRIPTION	LOAD	POLES	FRAME	TRIP	TYPE	ACC.	WIRE AND RACEWAY	CIRCUIT KEY
1	PANEL EM1	131.94 kVA	3	400 A	400 A	LSIG		4#600 & 1#3 EGC IN 3 1/2" C.	
2	PANEL EM2	90.68 kVA	3	400 A	400 A	LSIG		4#600 & 1#3 EGC IN 3 1/2" C.	
3	PANEL EM3	62 kVA	3	400 A	400 A	LSIG		4#600 & 1#3 EGC IN 3 1/2" C.	
4	100KA SPD	0 kVA	3	30 A	30 A	--	--	--	--
5	SPARE	0 kVA	3	250 A	250 A	--	--	--	--
6	SPARE	0 kVA	3	250 A	250 A	--	--	--	--

LOAD SUMMARY (INCLUDES ALL TUBS IN THIS PANEL)

LOAD CLASSIFICATION	CONNECTED LOAD	DEMAND FACTOR	ESTIMATED DEMAND	TOTALS*	
Dwelling Lighting	1.16 kVA	100.00%	1.16 kVA		
HVAC	72.025 kVA	100.00%	72.025 kVA	TOTAL CONNECTED LOAD:	284.62 kVA
HVAC Heating Only	12.408 kVA	100.00%	12.408 kVA	TOTAL ESTIMATED DEMAND LOAD:	253.349 kVA
Kitchen Equip.	5.8 kVA	80.86%	4.69 kVA	TOTAL CONNECTED AMPS:	790.02 A
Lighting	9.556 kVA	100.00%	9.556 kVA	TOTAL ESTIMATED DEMAND AMPS:	703.2 A
Motor	87.568 kVA	100.00%	87.568 kVA		
Other	0 kVA	0.00%	0 kVA		
Power	19.302 kVA	100.00%	19.302 kVA		
Receptacles	70.32 kVA	57.11%	40.16 kVA		
Receptacles - Dwelling Units	6.48 kVA	100.00%	6.48 kVA		

*TOTAL DEMAND CALCS SUBTRACT ANY REDUNDANT LOAD AND THE SMALLER OF ANY NONCOINCIDENT HVAC LOADS. THIS CALC IS DONE AT EACH PANEL.

CIRCUIT KEY NOTES:

PANEL EM3

MOUNTING: SURFACE
ENCLOSURE: NEMA PB 1
FED FROM: 400 A/3P LSIG @ SB-EM
LOCATION: JANITOR STOR. 122
SPD: 100kA

SOLID NEUTRAL GROUND BUS

MAIN: 400 A MCB
VOLTS: 120/208 Wye
PHASE: 3
WIRE: 4
SCCR: 22 kA
ISC: 18.73 kA

NOTES: PROVIDE WITH 100KA SPD

KEY	CKT NO.	LOAD DESCRIPTION	OCPD AMPS	P	WIRE SIZE H	N	G	A		B		C		WIRE SIZE G	N	H	P	OCPD AMPS	LOAD DESCRIPTION	CKT NO.	KEY
	1	REC WASHER LANDRY 121	20 A	1	12	12	12	0.18	0.53					12	12	12	1	20 A	CP-1	2	
	3	WH-2	20 A	1	12	12	12			0.22	0.54			12	12	12	1	20 A	RECEPTACLES EXERCISE 103	4	
	5	LIGHTING - WALL PACKS	20 A	1	12	12	12					0.46	0.8	12	12	12	1	20 A	DISHWASHER KITCHEN	6	
	7	DISHWASHER KITCHEN	20 A	1	12	12	12	0.8	0.9					12	12	12	1	20 A	RECEPTACLES CORRIDOR 102	8	
	9	LIGHTING - BAY	20 A	1	10	10	10			0.9	0.99			12	12	12	1	20 A	EF-7, LEF-1, CEF-4, RECEPTS	10	
	11	RECEPTACLES KITCHEN	20 A	1	12	12	12					0.9	1	10	10	10	1	20 A	ELLIPTICAL TRAINING 104	12	
	13	TREADMILL TRAINING 104	20 A	1	10	10	10	1	1.18					8	8	8	1	20 A	LIGHTING - NORTH BLDG	14	
	15	EXTERIOR RECEPTACLES	20 A	1	6	6	6			1.26	1.25			12	12	12	1	20 A	SF-2	16	
	17	RECEPTACLES STUDY 125	20 A	1	12	12	12					1.08	1.44	10	10	10	1	20 A	RECEPTACLES CORRIDOR	18	
	19	RECEPTACLES STUDY 125	20 A	1	12	12	12	1.26	1.43					6	6	6	1	20 A	LIGHTING - SOUTH BLDG	20	
	21	RECEPTS CREW 133, STOR 134 & 135	20 A	1	12	12	12			1.29	0.54			12	12	12	1	20 A	Receptacles Counter 125	22	
	23	EF-6, RECEPTACLES EMS CLOSET	20 A	1	12	12	12					1.4	1.68	10	10	10	1	20 A	RECEPTACLES CREW 129 & 130	24	
	25	LIGHTING - WEST BLDG	20 A	1	6	6	6	1.49	0.54					12	12	12	1	20 A	RECEPTACLES OFFICE 141	26	
	27	FLOOR BOXESS EXERCISE 103	20 A	1	12	12	12			0.72	0.15			12	--	12	2	20 A	BSB-1, BSB-2, BSB-3	28	
	29	LIGHTING - EAST BLDG	20 A	1	8	8	8					1.37	0.15	--	--	--	--	--	--	30	--
	31	FC-5, FC-6	20 A	2	12	--	12	0.23	0.81					12	--	12	2	20 A	FC-1, FC-2	32	
--	33	--	--	--	--	--	--			0.23	0.81			--	--	--	--	--	--	34	--
	35	FC-4	20 A	2	12	--	12					0.84	1.5	12	--	12	2	20 A	EUH-3	36	
--	37	--	--	--	--	--	--	0.84	1.5					--	--	--	--	--	--	38	--
	39	FRIDGE - KITCHEN	20 A	1	12	12	12			0.8	4.88			8	--	4	3	70 A	UPS	40	
	41	REC DRYER LAUNDRY 121	40 A	2	8	8	10					2.85	4.88	--	--	--	--	--	--	42	--
--	43	--	--	--	--	--	--	2.85	0.72					--	--	--	--	--	--	44	--
	45	RECEPTACLES EXERCISE 103	20 A	1	12	12	12			0.9	1.5			12	12	12	1	20 A	RECEPTACLES CREW 113 & 114	46	
	47	Receptacles Counter 125	20 A	1	12	12	12					0.54	0.72	12	12	12	1	20 A	RECEPTACLES OFFICE 141	48	
	49	FLOOR BOXES DAY ROOM 139	20 A	1	12	12	12	0.72	0.8					12	12	12	1	20 A	FRIDGE - KITCHEN	50	
	51																			52	
	53	FRIDGE - KITCHEN	20 A	1	12	12	12					0.8	0.9	12	12	12	1	20 A	RECEPTACLES KITCHEN	54	
	55	RECEPTACLES DAY ROOM 139	20 A	1	12	12	12	0.9	1.5					12	12	12	1	20 A	RECEPTACLES CREW 109 & 110	56	
	57																			58	
	59	RECEPTACLES CREW 117 & 118	20 A	1	10	10	10					1.5								60	
							Total Load:	20.19 kVA		16.98 kVA		24.82 kVA									
							Total Amps:	172.40		141.49		210.98									

LOAD SUMMARY

LOAD CLASSIFICATION	CONNECTED LOAD	DEMAND FACTOR	ESTIMATED DEMAND	TOTALS*	
Dwelling Lighting	1.16 kVA	100.00%	1.16 kVA		
HVAC	6.369 kVA	100.00%	6.369 kVA	TOTAL CONNECTED LOAD:	62.00 kVA
HVAC Heating Only	3 kVA	100.00%	3 kVA	TOTAL ESTIMATED DEMAND LOAD:	49.506 kVA
Kitchen Equip.	5.8 kVA	80.86%	4.69 kVA	TOTAL CONNECTED AMPS:	172.08 A
Lighting	5.683 kVA	100.00%	5.683 kVA	TOTAL ESTIMATED DEMAND AMPS:	137.4 A
Motor	0.528 kVA	100.00%	0.528 kVA		
Other	0 kVA	0.00%	0 kVA		
Power	0.216 kVA	100.00%	0.216 kVA		
Receptacles	32.76 kVA	65.26%	21.38 kVA		
Receptacles - Dwelling Units	6.48 kVA	100.00%	6.48 kVA		

*TOTAL DEMAND CALCS SUBTRACT ANY REDUNDANT LOAD AND THE SMALLER OF ANY NONCOINCIDENT HVAC LOADS. THIS CALC IS DONE AT EACH PANEL.

CIRCUIT KEY NOTES:

PANEL EM1

MOUNTING: SURFACE
ENCLOSURE: NEMA PB 1
FED FROM: 400 A/3P LSIG @ SB-EM
LOCATION: ELEC. 148

SOLID NEUTRAL GROUND BUS

MAIN: 400 A MCB
VOLTS: 120/208 Wye
PHASE: 3
WIRE: 4
SCCR: 65 kA
ISC: 47.29 kA

NOTES:

KEY	CKT NO.	LOAD DESCRIPTION	OCPD AMPS	P	WIRE SIZE H	N	G	A		B		C		WIRE SIZE G	N	H	P	OCPD AMPS	LOAD DESCRIPTION	CKT NO.	KEY
	1	HP-2	20 A	2	10	--	10	1.08	1.41					10	--	10	2	20 A	CU-3	2	
--	3	--	--	--	--	--	--			1.08	1.41			--	--	--	--	--	--	4	--
	5	FC-3, FC-7 - FC-15	20 A	2	12	--	12					0.21	0.61	12	12	12	1	20 A	GUH-5, GUH-6, CEF-11	6	
--	7	--	--	--	--	--	--	0.21	3.38					10	8	10	2	40 A	HP-1	8	
	9	HP-4	35 A	2	10	--	10			1.67	3.38			--	--	--	--	--	--	10	--
--	11	--	--	--	--	--	--					1.67	1.07	10	10	10	1	20 A	KEF-1	12	
	13	EF-5	20 A	1	10	10	10	0.77	0.9					10	10	10	1	20 A	ROOF RECEPTACLES	14	
	15	EF-1	20 A	1	12	12	12			1.27	1.42			10	10	10	1	20 A	GUH-3, GUH-4	16	
	17	GDF-1	20 A	1	12	12	12					0.23	1.42	10	10	10	1	20 A	CUH-1, GUH-2	18	
	19	EF-2	20 A	3	12	--	12	0.77	0.57					12	12	12	1	20 A	EF-3	20	
--	21	--	--	--	--	--	--			0.77	1.5			12	--	12	2	20 A	EUH-1	22	
--	23	--	--	--	--	--	--					0.77	1.5	--	--	--	--	--	--	24	--
	25	FLAGPOLE LTG	20 A	1	12	12	12	0.5	0.2					12	12	12	1	20 A	FUEL TANK PUMP	26	
	27	SIGNAGE	20 A	1	10	10	10			1	5.75			10	--	4	3	60 A	VRF-1	28	
	29	MAU-1	50 A	3	8	--	10					4.11	5.75	--	--	--	--	--	--	30	--
--	31	--	--	--	--	--	--	4.11	5.75					--	--	--	--	--	--	32	--
--	33	--	--	--	--	--	--			4.11	1.15			12	--	12	3	20 A	EF-4	34	
	35	OVEN/RANGE - KITCHEN	50 A	2	6	--	10					4.85	1.15	--	--	--	--	--	--	36	--
--	37	--	--	--	--	--	--	4.85	1.15					--	--	--	--	--	--	38	--
	39	AC-1	60 A	3	8	--	10			11	1.5			12	--	12	2	20 A	EUH-2	40	
--	41	--	--	--	--	--	--					11	1.5	--	--	--	--	--	--	42	--
--	43	--	--	--	--	--	--	11	3.7					10	--	8	3	50 A	VEF-1	44	
	45	EG2 BATTERY CHARGER	20 A	1	12	12	12			1.2	3.7			--	--	--	--	--	--	46	--
	47	EG2 JACKET HEATER	20 A	2	12	--	12					1.25	3.7	--	--	--	--	--	--	48	--
--	49	--	--	--	--	--	--	1.25	0.72					12	12	12	1	20 A	AD-1	50	
	51	EG1 BATTERY CHARGER	20 A	1	12	12	12			1.2	1.25			12	--	12	2	20 A	EG1 JACKET HEATER	52	
	53	Receptacles Crew 117, 118	20 A	1	12	12	12					0.36	1.25	--	--	--	--	--	--	54	--
	55	Receptacles Crew 117, 118	20 A	1	12	12	12	0.36	0.36					12	12	12	1	20 A	Receptacles Crew 113, 114	56	
	57	Receptacles Crew 109, 110	20 A	1	12	12	12			0.36	0.36			12	12	12	1	20 A	Receptacles Crew 113, 114	58	
	59	Receptacles Crew 109, 110	20 A	1	12	12	12					0.36	0.54	12	12	12	1	20 A	Receptacles Crew 131,132,133	60	
	61	Receptacles Crew 131,132,133	20 A	1	12	12	12	0.54												62	
--	63	SPARE	20 A	1	--	--	--			0										64	
--	65	SPARE	20 A	1	--	--	--					0	0	--	--	--	1	20 A	SPARE	66	--
--	67	SPARE	20 A	1	--	--	--	0	0					--	--	--	1	20 A	SPARE	68	--
--	69	SPARE	20 A	1	--	--	--			0	0			--	--	--	1	20 A	SPARE	70	--
--	71	SPARE	20 A	1	--	--	--					0	0	--	--	--	1	20 A	SPARE	72	--
							Total Load:	43.58 kVA		45.08 kVA		43.29 kVA									
							Total Amps:	363.51		376.03		360.71									

LOAD SUMMARY

LOAD CLASSIFICATION	CONNECTED LOAD	DEMAND FACTOR	ESTIMATED DEMAND	TOTALS*	
HVAC	65.656 kVA	100.00%	65.656 kVA		
HVAC Heating Only	9.408 kVA	100.00%	9.408 kVA	TOTAL CONNECTED LOAD:	131.94 kVA
Lighting	0.5 kVA	100.00%	0.5 kVA	TOTAL ESTIMATED DEMAND LOAD:	131.94 kVA
Motor	33.72 kVA	100.00%	33.72 kVA	TOTAL CONNECTED AMPS:	366.23 A
Power	18.516 kVA	100.00%	18.516 kVA	TOTAL ESTIMATED DEMAND AMPS:	366.2 A
Receptacles	4.14 kVA	100.00%	4.14 kVA		

*TOTAL DEMAND CALCS SUBTRACT ANY REDUNDANT LOAD AND THE SMALLER OF ANY NONCOINCIDENT HVAC LOADS. THIS CALC IS DONE AT EACH PANEL.

CIRCUIT KEY NOTES:

PANEL EM2

MOUNTING: SURFACE
ENCLOSURE: NEMA PB 1
FED FROM: 400 A/3P LSIG @ SB-EM
LOCATION: ELEC. 148
SPD: 100kA

SOLID NEUTRAL GROUND BUS

MAIN: 400 A MCB
VOLTS: 120/208 Wye
PHASE: 3
WIRE: 4
SCCR: 65 kA
ISC: 48.97 kA

NOTES: PROVIDE WITH 100KA SPD

KEY	CKT NO.	LOAD DESCRIPTION	OCPD AMPS	P	WIRE SIZE H	N	G	A		B		C		WIRE SIZE G	N	H	P	OCPD AMPS	LOAD DESCRIPTION	CKT NO.	KEY
	1	Receptacles APPARATUS BAYS 142	20 A	1	10	10	10	1.08	0.9					12	12	12	1	20 A	Plug Mold APPARATUS BAY 142	2	
	3	Cord Reel APPARATUS BAY 142	30 A	1	10	10	10			2.5	0.72			12	12	12	1	20 A	Receptacles TOOL SHOP 145	4	
	5	Cord Reel APPARATUS BAY 142	30 A	1	10	10	10					2.5	0.36	12	12	12	1	20 A	Receptacles TOOL SHOP 145	6	
	7	Cord Reel APPARATUS BAY 142	30 A	1	8	8	8	2.5	0.9					12	12	12	1	20 A	Plug Mold TOOL SHOP 145	8	
	9	Cord Reel APPARATUS BAY 141	30 A	1	8	8	8			2.5	0.18			12	12	12	1	20 A	Receptacles RISER 143	10	
	11	Cord Reel APPARATUS BAY 142	30 A	1	8	8	8					2.5	0.36	12	12	12	1	20 A	Receptacles ROOM 144/145	12	
	13	Cord Reel APPARAUS BAY 142	30 A	1	10	10	10	2.5	0.18					12	12	12	1	20 A	Receptacles ELEC RM 148	14	
	15	WASHER REC - LAUNDRY 151	20 A	1	12	12	12			0.18	1.08			12	12	12	1	20 A	Receptacles RM 149/150/151/152	16	
	17	WASHER REC - LAUNDRY 151	20 A	1	12	12	12					0.18	2.85	10	8	8	2	40 A	DRYER REC - LAUNDRY 151	18	
	19	DRYER REC - LAUNDRY 151	40 A	2	8	8	10	2.85	2.85					--	--	--	--	--	--	20	--
--	21	--	--	--	--	--	--			2.85	0.9			12	12	12	1	20 A	Plug Mold APPARATUS BAYS 142	22	
--	23	SPARE	20 A	1	--	--	--					0	0.57	12	12	12	1	20 A	FACP	24	1
	25	Roll-up Door APPARATUS BAY 142	30 A	3	10	--	10	2.5	2.5					10	10	10	3	30 A	Roll-up Door APPARATUS BAY 142	26	
--	27	--	--	--	--	--	--			2.5	2.5			--	--	--	--	--	--	28	--
--	29	--	--	--	--	--	--					2.5	2.5	--	--	--	--	--	--	30	--
	31	Roll-up Door APPARATUS BAY 142	30 A	3	10	10	10	2.5	2.5					10	10	10	3	30 A	Roll-up Door APPARATUS BAY 142	32	
--	33	--	--	--	--	--	--			2.5	2.5			--	--	--	--	--	--	34	--
--	35	--	--	--	--	--	--					2.5	2.5	--	--	--	--	--	--	36	--
	37	Roll-up DOOR APPARATUS BAY 142	30 A	3	10	--	10	2.5	2.5					10	--	10	3	30 A	Roll-up Door APPARATUS BAY 142	38	
--	39	--	--	--	--	--	--			2.5	2.5			--	--	--	--	--	--	40	--
--	41	--	--	--	--	--	--					2.5	2.5	--	--	--	--	--	--	42	--
	43	LIGHTING INVERTER EML1	20 A	2	12	12	12	1.71	0.83					12	12	12	1	20 A	Lighting APPARATUS BAYS 142	44	
--	45	--	--	--	--	--	--			0	0.83			12	12	12	1	20 A	Lighting APPARATUS BAYS 142	46	
--	47	SPARE	20 A	1	--	--	--					0	1.04				2	20 A	BIG FAN #1 APPARATUS BAYS 142	48	
--	49	SPARE	20 A	1	--	--	--	0	1.04					--	--	--	--	--	--	50	--
--	51	SPARE	20 A	1	--	--	--			0	1.04						2	20 A	BIG FAN #2 APPARATUS BAYS 142	52	
--	53	SPARE	20 A	1	--	--	--					0	1.04	--	--	--	--	--	--	54	--
--	55	SPARE	20 A	1	--	--	--	0	1.04								2	20 A	BIG FAN #3 APPARATUS BAYS 142	56	
--	57	SPARE	20 A	1	--	--	--			0	1.04			--	--	--	--	--	--	58	--
--	59	SPARE	20 A	1	--	--	--					0	1.04				2	20 A	BIG FAN #4 APPARATUS BAYS 142	60	
--	61	SPARE	20 A	1	--	--	--	0	1.04					--	--	--	--	--	--	62	--
--	63	SPARE	20 A	1	--	--	--			0	0			--	--	--	1	20 A	SPARE	64	--
--	65	SPARE	20 A	1	--	--	--					0	0	--	--	--	1	20 A	SPARE	66	--
--	67	SPARE	20 A	1	--	--	--	0	0					--	--	--	1	20 A	SPARE	68	--
--	69	SPARE	20 A	1	--	--	--			0	0			--	--	--	1	20 A	SPARE	70	--
--	71	SPARE	20 A	1	--	--	--					0	0	--	--	--	1	20 A	SPARE	72	--
							Total Load:	34.42 kVA		28.82 kVA		27.44 kVA									
							Total Amps:	288.61		241.97		228.67									

LOAD SUMMARY

LOAD CLASSIFICATION	CONNECTED LOAD	DEMAND FACTOR	ESTIMATED DEMAND	TOTALS*	
Lighting	3.373 kVA	100.00%	3.373 kVA		
Motor	53.32 kVA	100.00%	53.32 kVA	TOTAL CONNECTED LOAD:	90.68 kVA
Power	0.57 kVA	100.00%	0.57 kVA	TOTAL ESTIMATED DEMAND LOAD:	78.973 kVA
Receptacles	33.42 kVA	64.96%	21.71 kVA	TOTAL CONNECTED AMPS:	251.71 A
				TOTAL ESTIMATED DEMAND AMPS:	219.2 A

*TOTAL DEMAND CALCS SUBTRACT ANY REDUNDANT LOAD AND THE SMALLER OF ANY NONCOINCIDENT HVAC LOADS. THIS CALC IS DONE AT EACH PANEL.

CIRCUIT KEY NOTES: 1. PROVIDE RED LOCK-OUT TYPE CIRCUIT BREAKER FOR FACP CIRCUIT.

ELECTRICAL DISTRIBUTION AND PANEL SCHEDULE NOTES:

1. BRANCH PANEL KEY:
   a. *A = ARC FAULT CIRCUIT INTERRUPT
   b. *G = GROUND FAULT CIRCUIT INTERRUPT
   c. *I = ISOLATED GROUND
   d. *M = BRANCH CIRCUIT MONITOR
   e. *P = PADLOCK HASP
   f. *R = RED HANDLE
   g. *S = SHUNT TRIP
   h. *NB = NEW BREAKER
   i. *RB = REPLACE EXISTING BREAKER WITH NEW BREAKER
   j. *EB = EXISTING BREAKER

PANEL UPS

MOUNTING: SURFACE
ENCLOSURE: NEMA PB 1
FED FROM: 70 A/3P @ EM3
LOCATION: DATA 124

SOLID NEUTRAL GROUND BUS

MAIN: 60 A MCB
VOLTS: 120/208 Wye
PHASE: 3
WIRE: 4
SCCR: 10 kA
ISC: 3.24 kA

NOTES:

KEY	CKT NO.	LOAD DESCRIPTION	OCPD AMPS	P	WIRE SIZE H	N	G	A		B		C		WIRE SIZE G	N	H	P	OCPD AMPS	LOAD DESCRIPTION	CKT NO.	KEY
	1	Receptacles DATA 124	20 A	1	12	12	12	0.36	0.36					12	12	12	1	20 A	Receptacles DATA 124	2	
	3	Receptacles DATA 124	20 A	1	12	12	12			0.36	0.36			12	12	12	1	20 A	Receptacles DATA 124	4	
	5	Receptacles DATA 124	20 A	1	12	12	12					0.36	0.36	12	12	12	1	20 A	Receptacles DATA 124	6	
	7	Receptacles DATA 124	30 A	2	10	10	10	2.08	2.08					10	10	10	2	30 A	Receptacles DATA 124	8	
--	9	--	--	--	--	--	--			2.08	2.08			--	--	--	--	--	--	10	--
	11																			12	
							Total Load:	4.88 kVA		4.88 kVA		0.72 kVA									
							Total Amps:	46.00		46.00		6.00									

LOAD SUMMARY

LOAD CLASSIFICATION	CONNECTED LOAD	DEMAND FACTOR	ESTIMATED DEMAND	TOTALS*	
Receptacles	10.48 kVA	97.71%	10.24 kVA		
				TOTAL CONNECTED LOAD:	10.48 kVA
				TOTAL ESTIMATED DEMAND LOAD:	10.24 kVA
				TOTAL CONNECTED AMPS:	29.09 A
				TOTAL ESTIMATED DEMAND AMPS:	28.4 A

*TOTAL DEMAND CALCS SUBTRACT ANY REDUNDANT LOAD AND THE SMALLER OF ANY NONCOINCIDENT HVAC LOADS. THIS CALC IS DONE AT EACH PANEL.

CIRCUIT KEY NOTES:

INVERTER EML1

ENCLOSURE: NEMA PB 1
FED FROM: 20 A/2P @ EM2
LOCATION: ELEC. 148

SOLID NEUTRAL GROUND BUS

MAIN: 20 A MCB
VOLTS: 120/208 Single
PHASE: 1
WIRE: 3
SCCR: 100 kA
SIZE: 2.5 kVA

NOTES: PROVIDE WITH OUTPUT TRANSFER DELAY.

CKT	LOAD DESCRIPTION	LOAD	POLES	FRAME	TRIP	TYPE	ACC.	WIRE AND RACEWAY	CIRCUIT KEY
1	LIGHTING	0.87 kVA	1	20 A	20 A			2#6 & 1#6 EGC IN 3/4" C.	
2	LIGHTING	0.83 kVA	1	20 A	20 A			2#12 & 1#12 EGC IN 3/4" C.	
3	SPARE	--	1	--	--	--	--	--	--
4	SPARE	--	1	--	--	--	--	--	--

LOAD SUMMARY (INCLUDES ALL TUBS IN THIS PANEL)

LOAD CLASSIFICATION	CONNECTED LOAD	DEMAND FACTOR	ESTIMATED DEMAND	TOTALS*	
Lighting	1.707 kVA	100.00%	1.707 kVA		
				TOTAL CONNECTED LOAD:	1.71 kVA
				TOTAL ESTIMATED DEMAND LOAD:	1.707 kVA
				TOTAL CONNECTED AMPS:	8.21 A
				TOTAL ESTIMATED DEMAND AMPS:	8.2 A

*TOTAL DEMAND CALCS SUBTRACT ANY REDUNDANT LOAD AND THE SMALLER OF ANY NONCOINCIDENT HVAC LOADS. THIS CALC IS DONE AT EACH PANEL.

CIRCUIT KEY NOTES:

tsk
314 South Water Street,
Suite 100
Henderson, NV 89015
phone: 702.456.3000
fax: 702.898.6209
www.tska.com

PROFESSIONAL ENGINEER STATE OF NEVADA
VENKATESH THUMALA JANAKIRAMAN
Exp: 06/30/2025
ELECTRICAL
No. 030510
01/03/2024

THESE DRAWINGS AND SPECIFICATIONS ARE THE PROPERTY OF TATE SNYDER KIMSEY ARCHITECTS AND MAY NOT BE REPRODUCED OR USED FOR ANY PURPOSE WITHOUT THE ARCHITECTS WRITTEN CONSENT. AS INSTRUMENTS OF SERVICE, THESE DOCUMENTS ARE NOT FINAL AND READY FOR USE, AND THEREFORE NOT VALID, UNLESS THEY ARE SEALED, SIGNED AND DATED.

Consultant

IMEG
4599 LONGLEY LANE
RENO, NV 89502
P: 775.828.4889
PROJECT #22007707.00
www.imegcorp.com

IMEG CORP. RESERVES PROPRIETARY RIGHTS, INCLUDING COPYRIGHTS, TO THIS DRAWING AND THE DATA SHOWN THEREON. SAID DRAWING AND/OR DATA ARE THE EXCLUSIVE PROPERTY OF IMEG CORP. AND SHALL NOT BE USED OR REPRODUCED FOR ANY OTHER PROJECT WITHOUT THE EXPRESS WRITTEN APPROVAL AND PARTICIPATION OF IMEG CORP. ©2022 IMEG CORP.

0 1 2 3
REF. SCALE IN INCHES
PROJECT #22007707.00

PLEASE RECYCLE

Project
SPARKS FIRE STATION #6

6963 WINGFIELD HILLS ROAD, SPARKS, NV 89436

Job No: 22-043

Owner
CITY OF SPARKS

BID SET

REVISIONS		
REV	DATE	DESCRIPTION

Sheet Title
PANEL SCHEDULES

Date: 01/04/2024
Sheet No:

E0.20

ELECTRICAL MECHANICAL CONNECTION SCHEDULE

ITEM	VOLTAGE	LOAD CLASS.	APPARENT LOAD	FLA	MCA	OCPD	Panel	CIRCUIT NUMBER	WIRE AND RACEWAY	DISCONNECT BY	DISCONNECT TYPE	CONTROLLER / STARTER BY	CONTROLLER / STARTER TYPE	COMMENTS
AC-1	208 V, 3Ø	Motor	33.00 kVA	30.8 A	38.5 A	60 A	EM1	39,41,43	3#8 & 1#10 EGC IN 3/4" C.	EC	FU	-	-	FUSE PER MANUFACTURER NAMEPLATE RATING.
AD-1	120 V, 1Ø	Motor	0.72 kVA	6 A	7.5 A	20 A	EM1	50	2#12 & 1#12 EGC IN 3/4" C.	-	-	EC	MX	
BSB-1	208 V, 1Ø	HVAC	0.07 kVA	0.3 A	0.4 A	20 A	EM3	28,30	2#12 & 1#12 EGC IN 3/4" C.	EC	FU	-	-	FUSE PER MANUFACTURER NAMEPLATE RATING.
BSB-2	208 V, 1Ø	HVAC	0.10 kVA	0.5 A	0.6 A	20 A	EM3	28,30	2#12 & 1#12 EGC IN 3/4" C.	EC	FU	-	-	FUSE PER MANUFACTURER NAMEPLATE RATING.
BSB-3	208 V, 1Ø	HVAC	0.13 kVA	0.6 A	0.8 A	20 A	EM3	28,30	2#12 & 1#12 EGC IN 3/4" C.	EC	FU	-	-	FUSE PER MANUFACTURER NAMEPLATE RATING.
CEF-1	120 V, 1Ø	HVAC	0.03 kVA	0.3 A	0.4 A	20 A	EM3	21	2#12 & 1#12 EGC IN 3/4" C.	-	-	EC	MX	
CEF-2	120 V, 1Ø	HVAC	0.03 kVA	0.3 A	0.4 A	20 A	EM3	24	2#10 & 1#10 EGC IN 3/4" C.	-	-	EC	MX	
CEF-3	120 V, 1Ø	HVAC	0.03 kVA	0.3 A	0.4 A	20 A	EM3	24	2#10 & 1#10 EGC IN 3/4" C.	-	-	EC	MX	
CEF-4	120 V, 1Ø	HVAC	0.03 kVA	0.3 A	0.4 A	20 A	EM3	10	2#12 & 1#12 EGC IN 3/4" C.	-	-	EC	MX	
CEF-5	120 V, 1Ø	HVAC	0.03 kVA	0.3 A	0.4 A	20 A	EM3	59	2#10 & 1#10 EGC IN 3/4" C.	-	-	EC	MX	
CEF-6	120 V, 1Ø	HVAC	0.03 kVA	0.3 A	0.4 A	20 A	EM3	59	2#10 & 1#10 EGC IN 3/4" C.	-	-	EC	MX	
CEF-7	120 V, 1Ø	HVAC	0.03 kVA	0.3 A	0.4 A	20 A	EM3	46	2#12 & 1#12 EGC IN 3/4" C.	-	-	EC	MX	
CEF-8	120 V, 1Ø	HVAC	0.03 kVA	0.3 A	0.4 A	20 A	EM3	46	2#12 & 1#12 EGC IN 3/4" C.	-	-	EC	MX	
CEF-9	120 V, 1Ø	HVAC	0.03 kVA	0.3 A	0.4 A	20 A	EM3	56	2#12 & 1#12 EGC IN 3/4" C.	-	-	EC	MX	
CEF-10	120 V, 1Ø	HVAC	0.03 kVA	0.3 A	0.4 A	20 A	EM3	56	2#12 & 1#12 EGC IN 3/4" C.	-	-	EC	MX	
CEF-11	120 V, 1Ø	HVAC	0.03 kVA	0.3 A	0.4 A	20 A	EM1	6	2#12 & 1#12 EGC IN 3/4" C.	-	-	EC	MX	
CP-1	120 V, 1Ø	Motor	0.53 kVA	4.4 A	5.5 A	20 A	EM3	2	2#12 & 1#12 EGC IN 3/4" C.	-	-	EC	MX	
CU-3/FCU-3	208 V, 1Ø	HVAC	2.83 kVA	13.6 A	17 A	20 A	EM1	2,4	2#10 & 1#10 EGC IN 3/4" C.	EC	FU	-	-	FUSE PER MANUFACTURER NAMEPLATE RATING.
EF-1	120 V, 1Ø	HVAC	1.06 kVA	8.8 A	11 A	20 A	EM1	15	2#12 & 1#12 EGC IN 3/4" C.	-	-	EC	MX	
EF-2	208 V, 3Ø	HVAC	2.31 kVA	6.4 A	8 A	20 A	EM1	19,21,23	3#12 & 1#12 EGC IN 3/4" C.	EC	FU	-	-	FUSE PER MANUFACTURER NAMEPLATE RATING.
EF-3	120 V, 1Ø	HVAC	0.57 kVA	4.8 A	6 A	20 A	EM1	20	2#12 & 1#12 EGC IN 3/4" C.	-	-	EC	MX	
EF-4	208 V, 3Ø	HVAC	3.46 kVA	9.6 A	12 A	20 A	EM1	34,36,38	3#12 & 1#12 EGC IN 3/4" C.	EC	FU	-	-	FUSE PER MANUFACTURER NAMEPLATE RATING.
EF-5	120 V, 1Ø	HVAC	0.77 kVA	6.4 A	8 A	20 A	EM1	13	2#10 & 1#10 EGC IN 3/4" C.	-	-	EC	MX	
EF-6	120 V, 1Ø	HVAC	0.32 kVA	2.7 A	3.4 A	20 A	EM3	23	2#12 & 1#12 EGC IN 3/4" C.	-	-	EC	MX	
EF-7	120 V, 1Ø	HVAC	0.32 kVA	2.7 A	3.4 A	20 A	EM3	10	2#12 & 1#12 EGC IN 3/4" C.	-	-	EC	MX	
EUH-1	208 V, 1Ø	HVAC Heating Only	3.00 kVA	14.4 A	18 A	20 A	EM1	22,24	2#12 & 1#12 EGC IN 3/4" C.	EC	NF	-	-	
EUH-2	208 V, 1Ø	HVAC Heating Only	3.00 kVA	14.4 A	18 A	20 A	EM1	40,42	2#12 & 1#12 EGC IN 3/4" C.	EC	NF	-	-	
EUH-3	208 V, 1Ø	HVAC Heating Only	3.00 kVA	14.4 A	18 A	20 A	EM3	36,38	2#12 & 1#12 EGC IN 3/4" C.	EC	NF	-	-	
FACP	120 V, 1Ø	Power	0.57 kVA	4.8 A	6 A	20 A	EM2	24	2#12 & 1#12 EGC IN 3/4" C.	-	-			
FC-1	208 V, 1Ø	HVAC	0.12 kVA	0.6 A	0.8 A	20 A	EM3	32,34	2#12 & 1#12 EGC IN 3/4" C.	EC	FU	-	-	FUSE PER MANUFACTURER NAMEPLATE RATING.
FC-2	208 V, 1Ø	HVAC	1.50 kVA	7.2 A	9 A	20 A	EM3	32,34	2#12 & 1#12 EGC IN 3/4" C.	EC	FU	-	-	FUSE PER MANUFACTURER NAMEPLATE RATING.
FC-3	208 V, 1Ø	HVAC	0.05 kVA	0.2 A	0.3 A	20 A	EM1	5,7	2#12 & 1#12 EGC IN 3/4" C.	EC	FU	-	-	FUSE PER MANUFACTURER NAMEPLATE RATING.
FC-4	208 V, 1Ø	HVAC	1.68 kVA	8.1 A	10.1 A	20 A	EM3	35,37	2#12 & 1#12 EGC IN 3/4" C.	EC	FU	-	-	FUSE PER MANUFACTURER NAMEPLATE RATING.
FC-5	208 V, 1Ø	HVAC	0.23 kVA	1.1 A	1.4 A	20 A	EM3	31,33	2#12 & 1#12 EGC IN 3/4" C.	EC	FU	-	-	FUSE PER MANUFACTURER NAMEPLATE RATING.
FC-6	208 V, 1Ø	HVAC	0.23 kVA	1.1 A	1.4 A	20 A	EM3	31,33	2#12 & 1#12 EGC IN 3/4" C.	EC	FU	-	-	FUSE PER MANUFACTURER NAMEPLATE RATING.
FC-7	208 V, 1Ø	HVAC	0.04 kVA	0.2 A	0.3 A	20 A	EM1	5,7	2#12 & 1#12 EGC IN 3/4" C.	EC	FU	-	-	FUSE PER MANUFACTURER NAMEPLATE RATING.
FC-8	208 V, 1Ø	HVAC	0.04 kVA	0.2 A	0.3 A	20 A	EM1	5,7	2#12 & 1#12 EGC IN 3/4" C.	EC	FU	-	-	FUSE PER MANUFACTURER NAMEPLATE RATING.
FC-9	208 V, 1Ø	HVAC	0.04 kVA	0.2 A	0.3 A	20 A	EM1	5,7	2#12 & 1#12 EGC IN 3/4" C.	EC	FU	-	-	FUSE PER MANUFACTURER NAMEPLATE RATING.
FC-10	208 V, 1Ø	HVAC	0.04 kVA	0.2 A	0.3 A	20 A	EM1	5,7	2#12 & 1#12 EGC IN 3/4" C.	EC	FU	-	-	FUSE PER MANUFACTURER NAMEPLATE RATING.
FC-11	208 V, 1Ø	HVAC	0.04 kVA	0.2 A	0.3 A	20 A	EM1	5,7	2#12 & 1#12 EGC IN 3/4" C.	EC	FU	-	-	FUSE PER MANUFACTURER NAMEPLATE RATING.
FC-12	208 V, 1Ø	HVAC	0.04 kVA	0.2 A	0.3 A	20 A	EM1	5,7	2#12 & 1#12 EGC IN 3/4" C.	EC	FU	-	-	FUSE PER MANUFACTURER NAMEPLATE RATING.
FC-13	208 V, 1Ø	HVAC	0.04 kVA	0.2 A	0.3 A	20 A	EM1	5,7	2#12 & 1#12 EGC IN 3/4" C.	EC	FU	-	-	FUSE PER MANUFACTURER NAMEPLATE RATING.
FC-14	208 V, 1Ø	HVAC	0.04 kVA	0.2 A	0.3 A	20 A	EM1	5,7	2#12 & 1#12 EGC IN 3/4" C.	EC	FU	-	-	FUSE PER MANUFACTURER NAMEPLATE RATING.
FC-15	208 V, 1Ø	HVAC	0.04 kVA	0.2 A	0.3 A	20 A	EM1	5,7	2#12 & 1#12 EGC IN 3/4" C.	EC	FU	-	-	FUSE PER MANUFACTURER NAMEPLATE RATING.
GDF-1	120 V, 1Ø	HVAC	0.23 kVA	1.9 A	2.4 A	20 A	EM1	17	2#12 & 1#12 EGC IN 3/4" C.	-	-	EC	MX	
GUH-1	120 V, 1Ø	HVAC Heating Only	0.71 kVA	5.9 A	7.3 A	20 A	EM1	18	2#10 & 1#10 EGC IN 3/4" C.	-	-	EC	MX	
GUH-2	120 V, 1Ø	HVAC Heating Only	0.71 kVA	5.9 A	15 A	20 A	EM1	18	2#10 & 1#10 EGC IN 3/4" C.	-	-	EC	MX	
GUH-3	120 V, 1Ø	HVAC Heating Only	0.71 kVA	5.9 A	7.3 A	20 A	EM1	16	2#10 & 1#10 EGC IN 3/4" C.	-	-	EC	MX	
GUH-4	120 V, 1Ø	HVAC Heating Only	0.71 kVA	5.9 A	7.3 A	20 A	EM1	16	2#10 & 1#10 EGC IN 3/4" C.	-	-	EC	MX	
GUH-5	120 V, 1Ø	HVAC Heating Only	0.29 kVA	2.4 A	5.5 A	20 A	EM1	6	2#12 & 1#12 EGC IN 3/4" C.	-	-	EC	MX	
GUH-6	120 V, 1Ø	HVAC Heating Only	0.29 kVA	2.4 A	5.5 A	20 A	EM1	6	2#12 & 1#12 EGC IN 3/4" C.	-	-	EC	MX	
HP-1/FCU-1/FCU-5	208 V, 1Ø	HVAC	6.76 kVA	32.5 A	35 A	40 A	EM1	8,10	2#10 & 1#10 EGC IN 3/4" C.	EC	FU	-	-	FUSE PER MANUFACTURER NAMEPLATE RATING.
HP-2/FCU-2	208 V, 1Ø	HVAC	2.16 kVA	10.4 A	13 A	20 A	EM1	1,3	2#10 & 1#10 EGC IN 3/4" C.	EC	FU	-	-	FUSE PER MANUFACTURER NAMEPLATE RATING.
HP-4/FCU-4	208 V, 1Ø	HVAC	3.34 kVA	16.1 A	20.1 A	35 A	EM1	9,11	2#10 & 1#10 EGC IN 3/4" C.	EC	FU	-	-	FUSE PER MANUFACTURER NAMEPLATE RATING.
KEF-1	120 V, 1Ø	HVAC	1.07 kVA	8.9 A	8.9 A	20 A	EM1	12	2#10 & 1#10 EGC IN 3/4" C.	-	-	EC	MX	
LEF-1	120 V, 1Ø	HVAC	0.09 kVA	0.8 A	1 A	20 A	EM3	10	2#12 & 1#12 EGC IN 3/4" C.	-	-	EC	MX	
MAU-1	208 V, 3Ø	HVAC	12.32 kVA	34.2 A	34.2 A	50 A	EM1	29,31,33	3#8 & 1#10 EGC IN 3/4" C.	EC	FU	-	-	FUSE PER MANUFACTURER NAMEPLATE RATING.
SF-2	120 V, 1Ø	HVAC	1.25 kVA	10.4 A	13 A	20 A	EM3	16	2#12 & 1#12 EGC IN 3/4" C.	-	-	EC	MX	
VEF-1	208 V, 3Ø	HVAC	11.10 kVA	30.8 A	38.5 A	50 A	EM1	44,46,48	3#8 & 1#10 EGC IN 3/4" C.	EC	FU	-	-	FUSE PER MANUFACTURER NAMEPLATE RATING.
VRF-1	208 V, 3Ø	HVAC	17.24 kVA	47.8 A	59.8 A	60 A	EM1	28,30,32	3#4 & 1#10 EGC IN 1" C.	EC	FU	-	-	FUSE PER MANUFACTURER NAMEPLATE RATING.
WH-1	120 V, 1Ø	Power	0.22 kVA	1.8 A	2.3 A	20 A	EM1	15	2#12 & 1#12 EGC IN 3/4" C.	-	-	EC	MX	
WH-2	120 V, 1Ø	Power	0.22 kVA	1.8 A	2.3 A	20 A	EM3	3	2#12 & 1#12 EGC IN 3/4" C.	-	-	EC	MX	

DISCONNECT AND STARTER SCHEDULE

NOTE: ALL DISCONNECTS (EXCEPT MANUAL STARTERS) SHALL BE HEAVY DUTY TYPE.

DISCONNECT TYPE:	**ACCESSORIES & OPTIONS**	
FU - FUSED	SA - STANDARD ACCESSORIES (INCLUDES * ITEMS)	PF - PHASE LOSS PROTECTION (5 HP OR GREATER, 3 PHASE...
NF - NON-FUSED	*CT - CONTROL TRANSFORMER, FUSED 120V	TO - MELTING THERMAL OVERLOADS (1 PHASE)
CB - CIRCUIT BREAKER	*EO - ELECTRONIC OVERLOAD (3 PHASE MOTORS)	TS - 2 SPEED SELECTOR SWITCH IN DOOR
	*HA - HAND-OFF-AUTO IN DOOR	GP - GREEN (OFF) PILOT LIGHT IN DOOR
STARTER TYPE:	*RP - RED (RUN) PILOT LIGHT IN DOOR	FA - 4-CONVERTIBLE AUXILIARY CONTACTS
FV - FULL VOLTAGE	*TA - TWO CONVERTIBLE AUXILIARY CONTACTS	EI - ELECTRICAL INTERLOCK (2)-N.O. & (2)-N.C.
YD - WYE - DELTA	S/N - INSULATED NEUTRAL ASSEMBLY	SS - START-STOP PUSHBUTTON IN DOOR
RE - REVERSING		HL - HANDLE PADLOCK HASP
TW - 2 SPEED, 2 WINDING		
SW - 2 SPEED, 1 WINDING		
RV - REDUCED VOLTAGE AUTOXFMR		
SS - SOLID STATE		
MS - MANUAL STARTER		
MX - MANUAL SWITCH		
FS - FUSED SWITCH		
AMS-ASSEMBLED MOTOR STARTER		

ITEM	DISCONNECT TYPE & RATING: TYPE	RATING	TRIP RATING	VOLTAGE	POLES	STARTER: NEMA SIZE	STARTER: TYPE	ENCLOSURE	REQUIRED ACCESSORIES & OPTIONS	COMMENTS
MX-EF-1		30 A		120 V	1	0	MX	NEMA 1		
MX-GUH-1		30 A		120 V	1	0	MX	NEMA 1		
MX-GUH-2		30 A		120 V	1	0	MX	NEMA 1		
MX-GUH-4		30 A		120 V	1	0	MX	NEMA 1		
MX-EF-5		30 A		120 V	1	0	MX	NEMA 1		
MX-EF-6		30 A		120 V	1	0	MX	NEMA 1		
MX-EF-7		30 A		120 V	1	0	MX	NEMA 1		
MX-EF-3		30 A		120 V	1	0	MX	NEMA 1		
MX-SF-2		30 A		120 V	1	0	MX	NEMA 1		
MX-CEF-3		30 A		120 V	1	0	MX	NEMA 1		
MX-CEF-2		30 A		120 V	1	0	MX	NEMA 1		
MX-CEF-1		30 A		120 V	1	0	MX	NEMA 1		
MX-CEF-5		30 A		120 V	1	0	MX	NEMA 1		
MX-CEF-6		30 A		120 V	1	0	MX	NEMA 1		
MX-CEF-7		30 A		120 V	1	0	MX	NEMA 1		
MX-CEF-8		30 A		120 V	1	0	MX	NEMA 1		
MX-CEF-9		30 A		120 V	1	0	MX	NEMA 1		
MX-CEF-10		30 A		120 V	1	0	MX	NEMA 1		
MX-CEF-4		30 A		120 V	1	0	MX	NEMA 1		
MX-LEF-1		30 A		120 V	1	0	MX	NEMA 1		
MX-GUH-5		30 A		120 V	1	0	MX	NEMA 1		
MX-WH-2		30 A		120 V	1	0	MX	NEMA 1		
MX-GUH-6		30 A		120 V	1	0	MX	NEMA 1		
MX-GDF-1		30 A		120 V	1	0	MX	NEMA 1		
MX-CP-1		30 A		120 V	1	0	MX	NEMA 1		
MX-KEF-1		30 A		120 V	1	0	MX	NEMA 4		
MX-GUH-3		30 A		120 V	1	0	MX	NEMA 1		
MX-AD-1		30 A		120 V	1	0	MX	NEMA 1		
MX-CEF-11		30 A		120 V	1	0	MX	NEMA 1		
MX-CP-1		30 A		120 V	1	0	MX	NEMA 1		
FDS-CU-3	FU	30 A	30 A	208 V	2			NEMA 3R		
FDS-HP-2/FCU-2	FU	30 A	30 A	208 V	2			NEMA 3R		
FDS-BAF	FU	30 A	30 A	208 V	2			NEMA 3R		
FDS-EF-4	FU	30 A	30 A	208 V	3			NEMA 3R		
FCS-EF-2	FU	30 A	30 A	208 V	3	1	FV	NEMA 1	SA	INTER-LOCK WITH SCBA COMPRESSOR
FDS-HP-1/FCU-1/FCU-5	FU	60 A	30 A	208 V	2			NEMA 3R		
FDS-HP-4/FCU-4	FU	60 A	60 A	208 V	2			NEMA 3R		
FDS-VRF-1	FU	60 A	60 A	208 V	3			NEMA 3R		
FDS-VEF-1	FU	60 A	60 A	208 V	3			NEMA 3R		
FDS-MAU-1	FU	60 A	60 A	208 V	3			NEMA 3R		
FDS-AC-1	FU	60 A	60 A	208 V	3			NEMA 3R		
FDS-WH-1	NF	30 A	30 A	208 V	2			NEMA 1		
FDS-EUH-3	NF	30 A	30 A	208 V	2			NEMA 1		
FDS-EUH-1	NF	30 A	30 A	208 V	2			NEMA 1		
FDS-FC-12	NF	30 A	30 A	208 V	2			NEMA 1		
FDS-FC-11	NF	30 A	30 A	208 V	2			NEMA 1		
FDS-FC-10	NF	30 A	30 A	208 V	2			NEMA 1		
FDS-FC-9	NF	30 A	30 A	208 V	2			NEMA 1		
FDS-FC-8	NF	30 A	30 A	208 V	2			NEMA 1		
FDS-FC-7	NF	30 A	30 A	208 V	2			NEMA 1		
FDS-FC-15	NF	30 A	30 A	208 V	2			NEMA 1		
FDS-FC-14	NF	30 A	30 A	208 V	2			NEMA 1		
FDS-FC-13	NF	30 A	30 A	208 V	2			NEMA 1		
FDS-BSB-1	NF	30 A	30 A	208 V	2			NEMA 1		
FDS-BSB-3	NF	30 A	30 A	208 V	2			NEMA 1		
FDS-BSB-2	NF	30 A	30 A	208 V	2			NEMA 1		
FDS-FC-1	NF	30 A	30 A	208 V	2			NEMA 1		
FDS-FC-2	NF	30 A	30 A	208 V	2			NEMA 1		
FDS-FC-4	NF	30 A	30 A	208 V	2			NEMA 1		
FDS-FC-5	NF	30 A	30 A	208 V	2			NEMA 1		
FDS-FC-6	NF	30 A	30 A	208 V	2			NEMA 1		
FDS-EUH-2	NF	30 A	30 A	208 V	2			NEMA 1		
FDS-FC-9	NF	30 A	30 A	208 V	2			NEMA 1		

TRANSFER SWITCH SCHEDULE

SWITCH TYPE:	**ACCESSORIES & OPTIONS**
AUTO - AUTOMATIC	EE - ENGINE EXERCISER
B/I - AUTOMATIC WITH BYPASS ISOLATION	IM - IN-PHASE MONITOR
MAN - MANUAL OPERATION	SH - STRIP HEATER WITH THERMOSTAT
PGLB - PORTABLE GENERATOR & LOAD BANK CABINET	RM - REMOTE ANNUNCIATOR
STAT - STATIC SOLID STATE	RC - REMOTE CONTROL CIRCUITS
SWITCH CONFIGURATION (CONFIG):	EL - ELEVATOR EMERGENCY TO NORMAL PRESIGNAL
CT - CLOSED TRANSITION	SP - SERIAL COMMUNICATIONS PORT
DT - DELAYED TRANSITION - CENTER OFF	PM - POWER MONITORING METER
30 - 30 CYCLE WITHSTAND RATING	RTC - REMOTE TRANSFER CONTROL FROM FIRE COMMAND CENTER
SE - SERVICE ENTRANCE LISTED	RMC - REMOTE ANNUNCIATION AT FIRE COMMAND CENTER
SN - SWITCHED NEUTRAL	TI - TRANSFER INHIBIT
ON - OVERLAPPING SWITCHED NEUTRAL	LS - LOAD SHED (PROVIDE DELAYED TRANSISTION - CENTER OFF CONFIGURATION)
DN - SOLID NEUTRAL	

ITEM	SWITCH: TYPE AND CONFIG	VOLTAGE	POLES	AMPS	SCCR	ENCLOSURE	REQUIRED ACCESSORIES & OPTIONS	PRIORITY GROUP	BRANCH	COMMENTS
ATS-EM	AUTO, ON, B/I	208 V	4	1,000 A	100 kA	NEMA 1	EE, RM	1	EMERGENCY	
MTS-EM	MAN, PGLB	208 V	4	1,000 A	35 kA	NEMA 1	EE, RM	1	EMERGENCY	

EMERGENCY POWER SUPPLY SYSTEM - SEQUENCE OF OPERATION

EMERGENCY POWER SUPPLY START: [GENERATOR START UPON LOSS OF UTILITY POWER] [PARALLEL GENERATORS START UPON LOSS OF UTILITY POWER]

LOAD TRANSFER STEPS:

PRIORITY GROUP	BRANCH	SEQUENCE OF OPERATION
1	EMERGENCY	GENERATOR START DELAY: 1 SECOND TRANSFER TO EMERGENCY DELAY: 1 SECOND TRANSFER TO NORMAL DELAY: 300 SECONDS LOAD SHED: NO

tsk

314 South Water Street,
Suite 100
Henderson, NV 89015
phone: 702.456.3000
fax: 702.898.6209
www.tska.com

PROFESSIONAL ENGINEER STATE OF NEVADA
VENKATESH THUMALA JANAKIRAMAN
Exp: 06/30/2025
ELECTRICAL
No. 030510
01/03/2024

THESE DRAWINGS AND SPECIFICATIONS ARE THE PROPERTY OF TATE SNYDER KIMSEY ARCHITECTS AND MAY NOT BE REPRODUCED OR USED FOR ANY PURPOSE WITHOUT THE ARCHITECTS WRITTEN CONSENT. AS INSTRUMENTS OF SERVICE, THESE DOCUMENTS ARE NOT FINAL AND READY FOR USE, AND THEREFORE NOT VALID, UNLESS THEY ARE SEALED, SIGNED AND DATED.

Consultant

IMEG
4599 LONGLEY LANE
RENO, NV 89502
P: 775.828.4889
PROJECT #22007707.00
www.imegcorp.com

IMEG CORP. RESERVES PROPRIETARY RIGHTS, INCLUDING COPYRIGHTS, TO THIS DRAWING AND THE DATA SHOWN THEREON. SAID DRAWING AND/OR DATA ARE THE EXCLUSIVE PROPERTY OF IMEG CORP. AND SHALL NOT BE USED OR REPRODUCED FOR ANY OTHER PROJECT WITHOUT THE EXPRESS WRITTEN APPROVAL AND PARTICIPATION OF IMEG CORP. ©2022 IMEG CORP.

0 1 2 3
REF. SCALE IN INCHES PROJECT #22007707.00

PLEASE RECYCLE

Project

SPARKS FIRE STATION #6

6963 WINGFIELD HILLS ROAD, SPARKS, NV 89436

Job No: 22-043

Owner

CITY OF SPARKS

BID SET

REVISIONS		
REV	DATE	DESCRIPTION

Sheet Title

ELECTRICAL SCHEDULES

Date: 01/04/2024

Sheet No:

E0.21

LIGHTING SEQUENCE OF OPERATION

NOTES:
1. {L##} DENOTES THE LIGHTING SEQUENCE OF OPERATIONS FOR THIS SPACE.
5. VERIFY AND COORDINATE ALL TIME CLOCK SETTINGS WITH OWNER PRIOR TO FINAL PROGRAMMING.
6. VERIFY AND COORDINATE ALL PUSH BUTTON WALL DEVICES AND QUANTITIES OF INDIVIDUAL BUTTONS WITH SCENES AND ZONES PER LOCATION.
7. VERIFY AND COORDINATE ALL PUSH BUTTON QUANTITIES AND SCENE NAMES WITH OWNER PRIOR TO SUBMITTING ENGRAVING TEMPLATE TO MANUFACTURER.

PLAN ID	LIGHTING SWITCHED
{LS01}	Sequence: Switched lights are manually controlled in this space. ON: The lights turn on using switches. OFF: The lights turn off using switches.
{LS02}	Sequence: Dimmed lights are manually controlled in this space. ON: The lights turned on using a wall control. ADJUST: The dimming luminaires are raised / lowered using wall control. OFF: The lights turn off using a wall controller.
{LS03}	Sequence: Switched lights are occupancy controlled in this space. ON: The lights are turned on by occupancy sensor or by wall switch. OFF: The lights are turned off manually by wall switch or automatically after the space has been vacant for 15 minutes.
{LS04}	Sequence: Exterior lights are schedule controlled. ON: The lights turn on via a photo sensor switch. OFF: The lights will automatically turn off by astronomic time switch.
{LS05}	Sequence: Exterior lights are photo controlled with manual dimming. ON: The lights can be turned on when insuficient daylight is available. Lights are turned on with a wallbox dimmer. ADJUST: Light level is raised / lowered using wallbox dimmer. OFF: The lights will automatically turn off when sufficeint daylight is available.
{LS06}	Sequence: Dimmed lights are occupancy controlled in this space. ON: The lights are turned on by occupancy sensor. ADJUST: The light levels are raised / lowerd using wall dimmer. OFF: The lights turn off automatically after the space has been vacant for 30 minutes.

LED LUMINAIRE SCHEDULE

(DESC) DOOR:
- FA - FLAT ALUMINUM
- FS - FLAT STEEL
- RA - REGRESSED ALUMINUM
- RS - REGRESSED STEEL

FINISH:
- PAF - PAINT AFTER FABRICATION
- CFSA - COLOR-FINISH SELECTION BY ARCHITECT

DISTRIBUTION:
- II - ANSI/IES TYPE 2 DISTRIBUTION
- III - ANSI/IES TYPE 3 DISTRIBUTION
- IV - ANSI/IES TYPE 4 DISTRIBUTION
- V - ANSI/IES TYPE 5 DISTRIBUTION

BEAMWIDTH:
- NSP - VERY NARROW SPOT
- SP - SPOT
- MD - MEDIUM
- WD - WIDE
- VWD - VERY WIDE
- WW - WALL WASH

(L/L) LENS/LOUVER:
- A - .125" ACRYLIC
- B - BAFFLE/LOUVER
- C - CLEAR ALZAK
- F - FROSTED ACRYLIC
- G - TEMPERED GLASS
- K - KSH12 .125" ACRYLIC
- K19 - KSH19 .156" ACRYLIC
- M - MATTE DIFFUSE CLEAR
- N - NONE
- P - POLYCARBONATE
- R - HIGH IMPACT DR ACRYLIC
- SS - SEMI-SPECULAR CLEAR
- O - OTHER (SEE DESCRIPTION)
- [DESIGN SPECIFIC BLANKS]

(MTG) MOUNTING:
- CL - CEILING SURFACE
- CV - COVE
- FR - FLANGED RECESSED
- P - PERIMETER
- PL - POLE
- RE - RECESSED
- SP - SUSPENDED
- SU - SURFACE
- UC - UNDER CABINET
- WL - WALL
- O - OTHER (SEE DESCRIPTION)

(WATT) PER: FIX - FIXTURE, FT - FOOT, LAMP

(TYPE) LED
- LED - LIGHT EMITTING DIODE
- TLED - TUBULAR LED LAMP
- OLED - ORGANIC LED
- DLED - DYNAMIC TUNABLE LED
- RGB - COLOR CHANGING LED
- RGBW - COLOR CHANGING + WHITE
- RGBA - COLOR CHANGING + AMBER
- RLED - RETROFIT LED
- WLED - WARM DIM LED

(TYPE) DRIVER:
- 0-10V - 0-10V DIMMING
- DALI - DIGITAL ADDRESSABLE
- DMX - DIGITAL MULTIPLEX
- EB - ELECTRONIC
- ELV - ELECTRONIC LOW VOLTAGE
- EM - EMERGENCY BATTERY
- HL - HIGH/LOW (100%/50%) STEP DIM
- LINE - LINE VOLTAGE DIMMING
- ML - MULTI-LEVEL SWITCHING
- MV - MULTI-VOLTAGE ELECTRONIC
- REM - REMOTE
- O - OTHER (SEE DESCRIPTION)

REFER TO SPECIFICATION SECTIONS LED LIGHTING 26 51 19 FOR ADDITIONAL INFORMATION AND REQUIREMENTS.
INTERIOR CORRELATED COLOR TEMPERATURE 4000K, COLOR RENDERING INDEX (CRI) AT OR ABOVE 80, UNLESS NOTED OTHERWISE.
EXTERIOR CORRELATED COLOR TEMPERATURE 3000K, COLOR RENDERING INDEX (CRI) AT OR ABOVE 80 UNLESS NOTED OTHERWISE.

			WATT		LED		DRIVER		
ITEM	DESCRIPTION	MTG	ANSI WATTS	PER	TYPE	DELIVERED LUMENS (MIN)	VOLTS	TYPE	MANUFACTURER AND SERIES
A1	24"W X 48"L X 2"H BACKLIT FLAT PANEL TROFFER STEEL HOUSING WITH WHITE FINISH FROSTED ACRYLIC LENS	RE	45 W	FIX	LED	4400 lm	120 V	0-10V	ELITE ORACLE 24-FPL-BL-LED GE CURRENT LPL24 METALUX 24CGT
A2	24"W X 24"L X 2"H BACKLIT FLAT PANEL TROFFER STEEL HOUSING WITH WHITE FINISH FROSTED ACRYLIC LENS	RE	37 W	FIX	LED	3500 lm	120 V	0-10V	ELITE ORACLE 22-FPL-BL-LED GE CURRENT LPL22 METALUX 22CGT
A2E	24"W X 24"L X 2"H BACKLIT FLAT PANEL TROFFER STEEL HOUSING WITH WHITE FINISH FROSTED ACRYLIC LENS. PROVIDE WITH 90 MIN EMERGENCY INTEGRAL BATTERY PACK	RE	37 W	FIX	LED	3500 lm	120 V	0-10V	ELITE ORACLE 22-FPL-BL-LED GE CURRENT LPL22 METALUX 22CGT
B1	24"L X 3"H X 3"D ROUND PROFILE VANITY LIGHT ALUMINUM EXTRUSION HOUSING W/ BRUSHED NICKEL ACRYLIC DIFFUSER INSTALL HORIZONTALLY	WL 78" AFF	20 W	FIX	LED	1600 lm 3000K 90 CRI	120 V	0-10V	ACUITY LITHONIA FMVCCLS CURRENT LITECONTROL 67-W-D BROWNLEE FLOW-RD
C1	48"L INTEGRADED LINEAR DIRECT LED SYSTEM VERIFY LAYOUT AND TYPE WITH CEILING AND LIGHTING SHOP DRAWING SUBMITTALS	CL	6 W	FT	LED	390 lm/ft 3500K 90 CRI	120 V	REM 0-10V	USG BRILLIANCE
D1	6" RECESSED DOWNLIGHT GALVANIZED STEEL FRAME 60° BEAM ANGLE SELF-FLANGED ALUMINUM REFLECTOR WITH WHITE FINISH	RE	16 W	FIX	LED	920 lm 3000K 90 CRI	120 V	0-10V	COOPER HALO HC6-61WDH ACUITY JUNO 6" TC 900 TC22LED
D1E	6" RECESSED DOWNLIGHT GALVANIZED STEEL FRAME 60° BEAM ANGLE SELF-FLANGED ALUMINUM REFLECTOR WITH WHITE FINISH. PROVIDE WITH INTEGRAL 90 MIN BATTER PACK.	RE	16 W	FIX	LED	920 lm 3000K 90 CRI	120 V	0-10V	COOPER HALO HC6-61WDH ACUITY JUNO 6" TC 900 TC22LED
D2	6" RECESSED SHOWER DOWNLIGHT GALVANIZED STEEL FRAME 60° BEAM ANGLE SELF-FLANGED NON-CONDUCTIVE POLYMER DEAD FRONT REFLECTOR WITH WHITE FINISH WET LOCATION / SHOWER RATED	RE	16 W	FIX	LED	920 lm 3000K 90 CRI	120 V	0-10V	COOPER HALO HC6-61PSMDW
F1	48" STRIP LIGHT STEEL HOUSING WITH WHITE FINISH ROUND FROSTED LENS PROVIDE WITH HARDWARE REQUIRED FOR MOUNTING IN LOCATIONS INDICATED ON PLANS	CL SU SP	46 W	FIX	LED	5250 lm	120 V	0-10V	METALUX 4SNLED ELITE ORACLE 4-OEC-LED H.E. WILLIAMS 75 LED ACUITY LITHONIA ZL1D LSI SD
H1	96"L X 4"W X 8"H LINEAR INDUSTRIAL LOW BAY WHITE HOUSING WHITE FROSTED ACRYLIC LENS SUSPENSION KIT	SP	150 W	FIX	LED	17,000 lm	120 V	0-10V	CURRENT LUMINATION LUS I8 A LUX DYNAMICS HIGH 8
L1	20'L X 8"W X 2"H RECTANGULAR LINEAR INDIRECT/DIRECT PENDANT STEEL HOUSING WITH DIE-CAST PLATES AT EACH END 60% UP/40% DOWN DISTRIBUTION AIR CRAFT CABLE SUSPENSION.	SP	9 W	FT	LED	1000 lm/ft 3500K	120 V	0-10V	FINELITE SERIES 16 LED 2E ELITE ORACLE AS15-LED ACUITY PEERLESS BRUNO BRM9L
N1	101"L X 4 1/2"W X 4 1/2"D RECESSED LINEAR ASYMMETRIC EXTRUDED ALUMINUM HOUSING CLEAR TEMPERED GLASS LENS WITH LAMBERTIAN DIFFUSER WET LOCATION LISTED	RE	8 W	FT	LED	500 lm/ft 3000K	120 V	0-10V	LUMENWERX VIA WET VIAWTASYR
P1	11 3/4" Ø PENDANT WITH OPAL GLASS SHADE VERIFY FINISH WITH ARCHITECT	SP	21 W	FIX	LED	2,000 lm 3500K 90 CRI	120 V	0-10v	DELRAY ASPECT AL2387
R1	48"L X 11"W X 3 1/2"H LOW PROFILE WRAPAROUND 20-GAUGE DIE FORMED COLD-ROLLED STEEL HOUSING W/ WHITE FINISH PAF FROSTED PRISMATIC ACRYLIC DIFFUSER	CL SU	44 W	FIX	LED	4425 lm	120 V	0-10V	COOPER METALUX WSNLED GE CURRENT LWS ACUITY LITHONIA LBL COLUMBIA LAW SIGNIFY DAYBRITE OWL LED
W1	7 1/2"H X 4 1/2"W X 4 1/2"D EXTERIOR WALL LUMINAIRE ALUMINUM HOUSING W/ FINISH PER ARCHITECT GASKETED GLASS LENS FORWARD THROW OPTICS	WL +90" AFF	10 W	FIX	LED	775 lm 3000K	120 V	0-10V	BEGA 33815
W2	WALL PACK DIE-CAST ALUMINUM HOUSING GASKETED GLASS LENS AND SILICONE SEALED OPTICAL LED CHAMBER SUITABLE FOR OPERATION IN TEMPERATURES BETWEEN -40° C AND 40° C IP66 RATED FINISH SELECTION BY ARCHITECT.	WL +108" AFF	12 W	FIX	LED	1400 lm 3000K	120 V	120V	COOPER LUMARK XTOR LSI WPSLS ACUITY LITHONIA WPX LED CURRENT EVOLVE EWLS
X1	EXIT SIGN WHITE THERMOPLASTIC BODY W/ GREEN LETTERS UNIVERSAL ARROWS, MOUNTING, AND FACING (DUAL OR SINGLE) INTEGRAL EMERGENCY NI-CAD BATTERY W/ SELF TEST & DIAGNOSTICS	O	3 W	FIX	LED	GREEN	120 V	EM	MAXILUME ELX-628 ACUITY LITHONIA LQMS SIGNIFY CHLORIDE CLX CURRENT HLI DUAL-LITE EVE

LIGHTING CONTROL GENERAL NOTES:

A. PROVIDE ALL NECESSARY COMPONENT FOR A FULLY FUNCTIONAL LIGHTING CONTROL SYSTEM. LUTRON VIVE OR APPROVED EQUAL.

B. PROVIDED DEDICATED POWER PACK/DIMMING PACK PER ZONE.

C. PROVIDE LIGHTING CONTROL PLAN FOR REVIEW AS PART OF LIGHTING CONTROL SUBMITTAL.

D. PROVIDE UL 924 RELAY PACK FOR ALL DIMMED ZONES THAT CONTAIN EGRESS FIXTURES.

LIGHTING CONTROL NOTES:

1. PROVIDE RAISE/LOWER AND TIME CLOCK OVERRIDE CONTROLS AT MASTER CONTROL LOCATED ON PLAN.
2. CONNECT TIME CLOCK. OPERATE PER OWNER DEFINED HOURS OF OPERATION.
3. DIM TO 10% OUTPUT AFTER HOURS.
4. DAYLIGHT HARVESTING ZONE. INTERCONNECT FIXTURES IN AREA TO LOCAL PHOTOCELL

tsk
314 South Water Street,
Suite 100
Henderson, NV 89015
phone: 702.456.3000
fax: 702.898.6209
www.tska.com

PROFESSIONAL ENGINEER STATE OF NEVADA
VENKATESH THUMALA JANAKIRAMAN
Exp: 06/30/2025
ELECTRICAL
No. 030510
01/03/2024

THESE DRAWINGS AND SPECIFICATIONS ARE THE PROPERTY OF TATE SNYDER KIMSEY ARCHITECTS AND MAY NOT BE REPRODUCED OR USED FOR ANY PURPOSE WITHOUT THE ARCHITECTS WRITTEN CONSENT.
AS INSTRUMENTS OF SERVICE, THESE DOCUMENTS ARE NOT FINAL AND READY FOR USE, AND THEREFORE NOT VALID, UNLESS THEY ARE SEALED, SIGNED AND DATED.

Consultant

IMEG
4599 LONGLEY LANE
RENO, NV 89502
P: 775.828.4889
PROJECT #22007707.00
www.imegcorp.com

IMEG CORP. RESERVES PROPRIETARY RIGHTS, INCLUDING COPYRIGHTS, TO THIS DRAWING AND THE DATA SHOWN THEREON. SAID DRAWING AND/OR DATA ARE THE EXCLUSIVE PROPERTY OF IMEG CORP. AND SHALL NOT BE USED OR REPRODUCED FOR ANY OTHER PROJECT WITHOUT THE EXPRESS WRITTEN APPROVAL AND PARTICIPATION OF IMEG CORP. ©2022 IMEG CORP.

0 1 2 3
REF. SCALE IN INCHES PROJECT #22007707.00

PLEASE RECYCLE

Project
SPARKS FIRE STATION #6

**6963 WINGFIELD HILLS ROAD,
SPARKS, NV 89436**

Job No: 22-043

Owner
CITY OF SPARKS

CITY OF SPARKS FIRE DEPARTMENT Est. 1905

BID SET

REVISIONS		
REV	DATE	DESCRIPTION

Sheet Title
LUMINAIRE SCHEDULE

Date: 01/04/2024
Sheet No:

E0.30

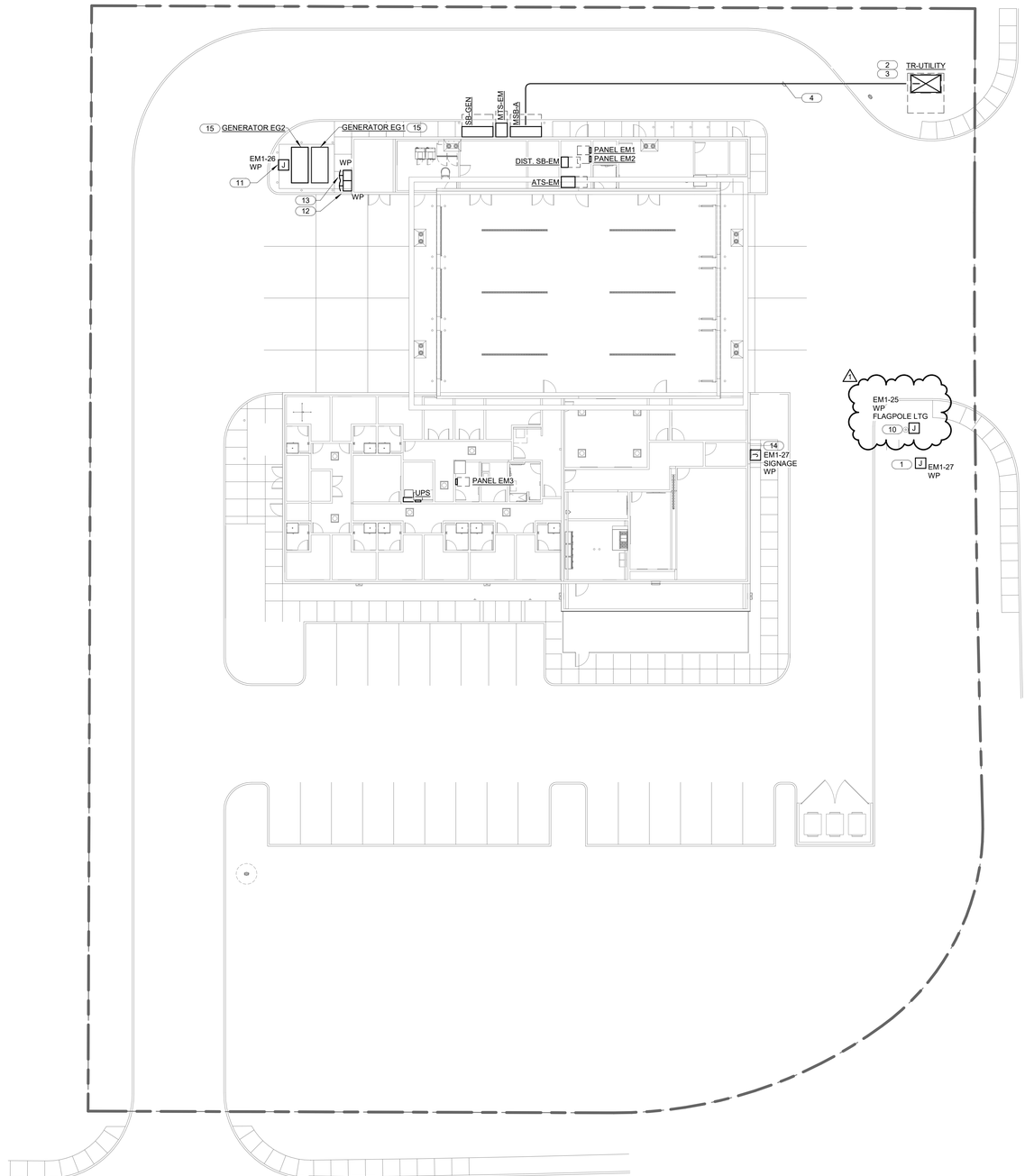

NORTH

1 **SITE PLAN - ELECTRICAL**

1/16" = 1'-0"

SHEET NOTES:

1. THE DRAWINGS REPRESENT ELECTRICAL DESIGN INTENT. THEY ARE SCHEMATIC AND DIAGRAMMATIC AND DO NO INDICATE CONSTRUCTION DETAILS OR ROUTING UNLESS OTHERWISE NOTED. THE SPECIFICATIONS ESTABLISH MINIMUM PERFORMANCE AND PRODUCT INSTALLATION REQUIREMENTS. PROVIDE PRODUCTS CONSISTENT WITH THE DESIGN INTENT AND NECESSARY FOR COMPLETE OPERATING ELECTRICAL SYSTEMS.
2. DIV. 26 CONTRACTOR SHALL PROVIDE ALL CONDUIT AND J-BOX ROUGH-IN FOR DIV. 27 AND DIV. 28 CONTRACTORS.
3. COORDINATE POWER RECEPTACLE ROUGH-IN LOCATIONS WITH SPECIAL SYSTEMS DEVICES SO THAT THE POWER RECEPTACLES ARE INSTALLED ADJACENT TO THE SPECIAL SYSTEM DEVICES.
4. IN ADDITION TO WORK SHOWN ON ELECTRICAL DRAWINGS, CONTRACTOR IS TO PROVIDE AND INSTALL ALL RACEWAY SYSTEMS AND POWER FOR ALL IT AND SECURITY SYSTEMS AS INDICATED.
5. REFER TO ARCHITECTURAL CASEWORK DETAILS TO COORDINATE ACTUAL PLACEMENT OF RECEPTACLES AND DEVICES LOCATED ABOVE COUNTERTOPS OR BELOW CASEWORK WHERE KNEE SPACES OCCUR.
6. CONDUIT AND WIRING ARE NOT BEEN SHOWN. IT IS THE RESPONSIBILITY OF THE ELECTRICAL CONTRACTOR TO PROVIDE THE NUMBER OF CONDUCTORS REQUIRED FOR HOT-LEGS, NEUTRAL, AND GROUNDING AT EACH DEVICE FOR PROPER BRANCH CIRCUITING SHOWN FOR EACH AREA OR ROOM. MINIMUM CONDUIT SIZE FOR POWER AND LIGHTING SYSTEMS SHALL BE 3/4".
7. 120/208V BRANCH CIRCUITS 100' OR GREATER IN CONDUCTOR LENGTH SHALL BE #10AWG, UNLESS OTHERWISE NOTED.
8. 277/480V BRANCH CIRCUITS 200' OR GREATER IN CONDUCTOR LENGTH SHALL BE #10 AWG, UNLESS OTHERWISE NOTED.
9. PROVIDE PULL STRING IN ALL EMPTY CONDUITS.
10. RECEPTACLES LABELED WITH "TV" SHALL BE MOUNTED IN TV BACK BOX OR AS DIRECTED BY OWNER. CONTRACTOR SHALL COORDINATE WITH USER AND ARCHITECT PRIOR TO ROUGH IN.
11. DEVICE COLORS: ALL COVER PLATES SHALL BE WHITE, UNLESS NOTED OTHERWISE. REFER TO SPECIFICATION 26 27 26.
12. LABEL ALL RECEPTACLE DEVICE PLATES WITH SOURCE PANEL AND CIRCUIT NUMBER. PROVIDE PERMANENT MACHINE GENERATED LABEL.
13. BRANCH CIRCUITS SHALL BE CONFIGURED WITH DEDICATED NEUTRALS AND INDEPENDENTLY OPERATED CIRCUIT BREAKERS.
14. BATHROOM RECPTACLE OUTLETS OR RECEPTACLE OUTLETS WITHIN 6'-0" OF A WATER SOURCE SHALL BE GFCI RATED PER NEC 210-52(d).
15. CONTRACTOR TO COORDINATE ALL CONDUIT SIZES WITH APPLICABLE EQUIPMENT/SYSTEM VENDORS PRIOR TO BID AND INSTALLATION.
16. ELECTRICAL CONTRACTOR SHALL COORDINATE EXACT LOCATION, QUANTITY, & INSTALLATION REQUIREMENTS OF ALL ELECTRICAL EQUIP. & RECEPTACLES INCLUDING MILL & COUNTER AREAS WITH ARCHITECT/OWNER PRIOR TO ROUGH IN.
17. ALL CIRCUITS SHALL HAVE AN INSULATED GROUND WIRE (BOND) SIZED PER NEC #250.95, #12 MINIMUM GROUND, WIRE NOT SHOWN ON DRAWINGS.
18. MAXIMUM NUMBER OF CONDUCTORS IN A CONDUIT SHALL NOT EXCEED 9, UNO.
19. CIRCUITS WIRED AS MULTI-WIRE BRANCH CIRCUITS SHALL HAVE A DISCONNECTING MEANS PER NEC 210.4(B).
20. ANY CONDUIT ROUTING IS SHOWN FOR REFERENCE ONLY. CONTRACTOR TO FEILD VERIFY AND ROUTE CONDUIT AND WIRING AS FIELD CONDITIONS PERMIT. INSTALL PULL/JUNCTION BOXES AS REQUIRED BY NEC.
21. ALL EQUIPMENT LOCATIONS, CONDUIT ROUTING, EQUIPMENT CONNECTIONS AND TERMINATION POINTS ARE SCHEMATIC AND SHOWN FOR REFERENCE ONLY. E.C. SHALL VERIFY AND COORDINATE EXACT REQUIREMENTS IN FIELD WITH ARCHITECT, AND EQUIPMENT VENDOR.
22. E.C. MUST COORDINATE COMPLETE ELECTRICAL INSTALLATIONS SO THAT ALL WORKING CLEARANCES FOR ALL ELECTRICAL EQUIPMENT ARE PROVIDED AS REQUIRED PER NEC 110.26. FURTHERMORE COORDINATE WITH ALL PERTINENT TRADES SO THAT ELECTRICAL INSTALLATIONS DO NOT PREVENT WORKING AND MAINTENANCE CLEARANCES TO ANY EQUIPMENT PROVIDED BY OTHERS. THIS INCLUDES BUT IS NOT LIMITED TO EQUIPMENT ACCESS PANELS, ACCESS DOORS, CONTROL PANELS, CONTROL EQUIPMENT/ DEVICES, SCREENS, ETC.

KEYNOTES: #

1. CONNECT ILLUMINATED MONUMENT SIGNAGE TO DEDICATED 120V BRANCH CIRCUIT. VERIFY LOCATION AND REQUIREMENTS WITH OWNER PRIOR TO ROUGH-IN.
2. PAD MOUNTED UTILITY COMPANY TRANSFORMER. PROVIDE CONCRETE PAD AND BOLLARDS PER UTILITY COMPANY REQUIREMENTS.
3. PROVIDE UNDERGROUND PRIMARY CONDUITS, SIZE AND QUANTITY PER UTILITY COMPANY REQUIREMENTS.
4. PROVIDE UNDERGROUND SECONDARY CONDUITS, SIZE AND QUANTITY PER UTILITY COMPANY REQUIREMENTS.
5. PROVIDE TELEPHONE/COMMUNICATION CONDUITS. SIZE AND QUANTITY AS NOTED, PER UTILITY COMPANY STANDARDS.
6. CONNECT IRRIGATION CONTROLLER. VERIFY LOCATION WITH LANDSCAPE CONTRACTOR PRIOR TO ROUGH-IN.
7. CONNECT BACK-FLOW PREVENTER "HOT-BOX". VERIFY LOCATION WITH CIVIL DRAWINGS PRIOR TO ROUGH-IN.
8. CONNECT FIRE SPRINKLER RISER ALARM BELL. VERIFY LOCATION AND HEIGHT WITH FIRE ALARM VENDOR/CONTRACTOR PRIOR TO ROUGH-IN.
9. CONNECT FIRE ALARM CONTROL PANEL. VERIFY LOCATION AND HEIGHT WITH FIRE ALARM VENDOR/CONTRACTOR PRIOR TO ROUGH-IN.
10. PROVIDE 120V BRANCH CIRCUIT AND CONNECT FLAGPOLE LIGHT. FLAGPOLE IS PROVIDED BY OTHERS. VERIFY LOCATION AND OTHER REQUIREMENTS WITH OWNER PRIOR TO ROUGH-IN.
11. PROVIDE EXPLOSION PROOF JUNCTION BOX AND CONNECTION FOR ABOVE GROUND FUEL TANK PUMP. ROUTE CIRCUIT THROUGH EMERGENCY 'OFF' STATION.
12. PROVIDE WEATHERPROOF EMERGENCY 'OFF' STATION FOR FUEL TANK PUMP.
13. PROVIDE WEATHERPROOF REMOTE EMERGENCY SHUT-OFF SWITCH FOR GENSET PER NEC 445.18. PUSHBUTTON SWITCH SHALL ACT AS DISCONNECTING MEANS FOR BOTH GENERATORS AND SHALL BE LOCKABLE IN THE OPEN POSITION.
14. PROVIDE 120V BRANCH CIRCUIT FOR BACKLIT SIGNAGE.
15. PROVIDE 6" CONRETE PAD FOR GENERATOR.

tsk

314 South Water Street,
Suite 100
Henderson, NV 89015
phone: 702.456.3000
fax: 702.898.6209
www.tska.com

PROFESSIONAL ENGINEER - STATE OF NEVADA
VENKATESH TRIMALAI JANARDHANAN
Exp:06/30/2025
ELECTRICAL
No. 03051D
01/03/2024

THESE DRAWINGS AND SPECIFICATIONS ARE THE PROPERTY OF TATE SNYDER KIMSEY ARCHITECTS AND MAY NOT BE REPRODUCED OR USED FOR ANY PURPOSE WITHOUT THE ARCHITECTS WRITTEN CONSENT. AS INSTRUMENTS OF SERVICE, THESE DOCUMENTS ARE NOT FINAL AND READY FOR USE, AND THEREFORE NOT VALID, UNLESS THEY ARE SEALED, SIGNED AND DATED.

Consultant

IMEG
www.imegcorp.com
4599 LONGLEY LANE
RENO, NV 89502
P: 775.826.4599
PROJECT #22007707.00

IMEG CORP. RESERVES PROPRIETARY RIGHTS, INCLUDING COPYRIGHTS, TO THIS DRAWING AND THE DATA SHOWN THEREON. SAID DRAWING AND/OR DATA ARE THE EXCLUSIVE PROPERTY OF IMEG CORP. AND SHALL NOT BE USED OR REPRODUCED FOR ANY OTHER PROJECT WITHOUT THE EXPRESS WRITTEN APPROVAL AND PARTICIPATION OF IMEG CORP. ©2022 IMEG CORP.

0 1 2 3
REF. SCALE IN INCHES PROJECT #22007707.00

PLEASE RECYCLE

Project

SPARKS FIRE STATION #6

6963 WINGFIELD HILLS ROAD, SPARKS, NV 89436

Job No: 22-043

Owner

CITY OF SPARKS

CITY OF SPARKS FIRE DEPARTMENT Est. 1905

BID SET

REVISIONS

REV	DATE	DESCRIPTION
1	05/31/23	Plan Check Responses

Sheet Title

SITE PLAN - ELECTRICAL

Date: 01/04/2024

Sheet No:

E1.00

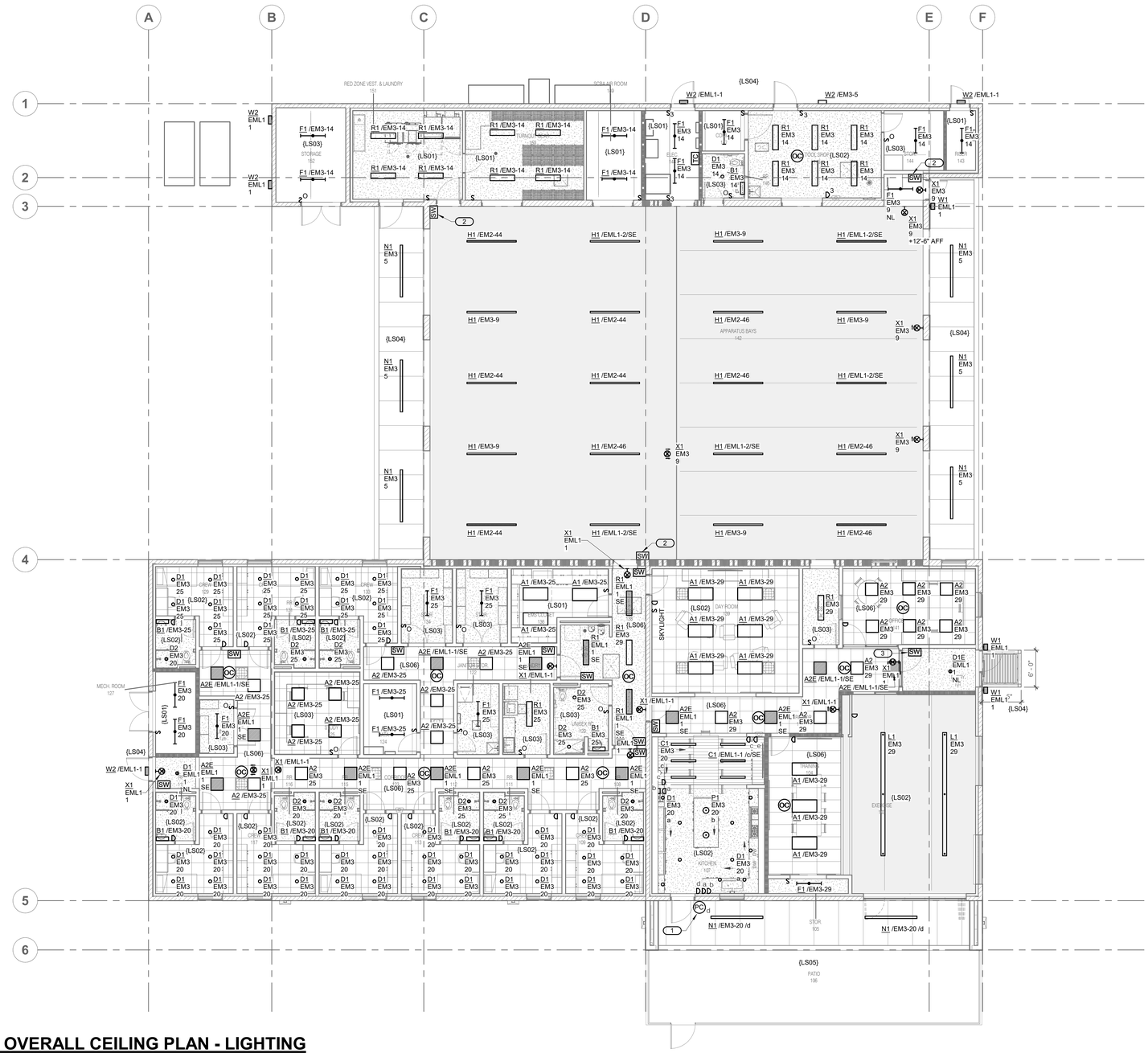

1 OVERALL CEILING PLAN - LIGHTING

1/8" = 1'-0"

NORTH

SHEET NOTES:

1. ALL NORMAL-POWER 277V LIGHTING THIS SHEET IS CIRCUITED TO ELECTRICAL PANEL 'HA1'. ALL EMERGENCY LIFE-SAFETY 277V LIGHTING THIS SHEET IS CIRCUITED TO PANEL 'HLS'.
2. 277/480V BRANCH CIRCUITS 200' OR GREATER IN CONDUCTOR LENGTH SHALL BE #10 AWG, UNLESS OTHERWISE NOTED.
3. ALL CONDUITS SHALL BE CONCEALED WHERE POSSIBLE AND RUN ON CENTER OF BEAMS IN LINE WITH FIXTURES, U.N.O. CONCEAL ALL J-BOXES FOR LIGHT FIXTURES WHERE POSSIBLE.
4. {L##} DENOTES THE LIGHTING SEQUENCE OF OPERATIONS FOR THIS SPACE. SEE SCHEDULE SHEET E-600.
5. LIGHTING CONTROL STATIONS [SW-LV] SHALL BE CAPABLE OF RAISE/LOWER AND SWITCHING ON/OFF FOR MULTIPLE SCENES AS INDICATED ON SHEETS AND THE LIGHTING SEQUENCE OF OPERATIONS (L##). COORDINATE QUANTITIES OF BUTTONS FOR CONTROL STATIONS WITH LIGHTING CONTROL MANUFACTURER.
6. a = SWITCH DESIGNATION FOR LIGHTING CONTROL
7. VERIFY AND COORDINATE ALL TIME CLOCK SETTINGS WITH OWNER PRIOR TO FINAL PROGRAMMING.
8. VERIFY AND COORDINATE ALL PUSH BUTTON QUANTITIES AND SCENE NAMES WITH OWNER PRIOR TO SUBMITTING ENGRAVING TEMPLATE TO MANUFACTURER.
9. LIGHTING CONTROL DEVICES SHOWN ON PLANS INDICATE CONTROL INTENT ONLY. PROVIDE ALL WIRING AND EQUPMENT REQUIRED TO FULFILL THE LIGHTING SEQUENCE OF OPRATION INDICATED.
10. PROVIDE UNSWITCHED HOT FOR EXIT SIGNS AND EMERGENCY FIXTURES. UNSWITCHED CONDUCTOR FOR EXIT SIGNS MUST BE FED FROM THE SAME BRANCH CIRCUIT FEEDING THE LIGHT FIXTURES IN THE AREA.
11. SEE DETAIL 1, SHEET E-402 FOR WIRING REQUIREMENTS FOR ALCR UNITS.
12. REFER TO ARCHITECTURAL REFLECTED CEILING PLANS FOR EXACT LOCATIONS, MOUNTING HEIGHTS OF LIGHT FIXTURES AND OTHER CEILING MOUNTED DEVICES.
13. COORDINATE EXACT LOCATION OF LIGHTING SWITCHES AND CONTROLS WITH ARCHITECT/OWNER PRIOR TO ROUGH IN.
14. CONNECT ALL EXIT SIGNS TO THE NEAREST UNSWITCHED LIFE SAFETY BRANCH LIGHTING CIRCUIT.
15. ROOMS AND SPACES CONTAINING MULTIPLE OCCUPANCY SENSORS SHALL BE WIRED AS A SINGLE ZONE SUCH THAT WHEN ANY SINGLE SENSOR SENSES THE SPACE IS OCCUPIED, THE LIGHTS IN THE SPACE SHALL REMAIN ON.
16. CONDUIT AND WIRING ARE NOT BEEN SHOWN. IT IS THE RESPONSIBILITY OF THE ELECTRICAL CONTRACTOR TO PROVIDE THE NUMBER OF CONDUCTORS REQUIRED FOR HOT-LEGS, NEUTRAL, AND GROUNDING AT EACH DEVICE FOR PROPER BRANCH CIRCUITING SHOWN FOR EACH AREA OR ROOM. MINIMUM CONDUIT SIZE FOR POWER LIGHTING SYSTEMS SHALL BE 3/4".
17. THE DRAWINGS REPRESENT ELECTRICAL DESIGN INTENT. THEY ARE SCHEMATIC AND DIAGRAMMATIC AND DO NOT INDICATE CONSTRUCTION DETAILS OR ROUTING UNLESS OTHERWISE NOTED THE SPECIFICATIONS ESTABLISH MINIMUM PERFORMANCE AND PRODUCT INSTALLATION REQUIREMENTS PROVIDE PRODUCTS CONSISTENT WITH THE DESIGN INTENT AND NECESSARY FOR COMPLETE OPERATING ELECTRICAL SYSTEMS.

KEYNOTES: (#)

1. LOCATE ON ROOF AND FACE NORTH.
2. PROVIDE 2-ZONE BUTTON STATION WITH RAISE/LOWER.
3. PROVIDE BUTTON STATION WITH RAISE/LOWER CONTROL FOR LIGHTS IN CORRIDOR. (TYPICAL FOR ALL [SW] IN CORRIDORS.)

tsk

314 South Water Street,
Suite 100
Henderson, NV 89015
phone: 702.456.3000
fax: 702.898.6209
www.tska.com

PROFESSIONAL ENGINEER - STATE OF NEVADA
EKKATERI TRIANDAFILLOU JANARDHANAN
Exp:06/30/2025
ELECTRICAL
No. 030510
01/03/2024

THESE DRAWINGS AND SPECIFICATIONS ARE THE PROPERTY OF TATE SNYDER KIMSEY ARCHITECTS AND MAY NOT BE REPRODUCED OR USED FOR ANY PURPOSE WITHOUT THE ARCHITECTS WRITTEN CONSENT. AS INSTRUMENTS OF SERVICE, THESE DOCUMENTS ARE NOT FINAL AND READY FOR USE, AND THEREFORE NOT VALID, UNLESS THEY ARE SEALED, SIGNED AND DATED.

Consultant

IMEG
www.imeg.com
4590 LONGLEY LANE
RENO, NV 89502
P: 775.826.4889
PROJECT #22007707.00

IMEG CORP. RESERVES PROPRIETARY RIGHTS, INCLUDING COPYRIGHTS, TO THIS DRAWING AND THE DATA SHOWN THEREON. SAID DRAWING AND/OR DATA ARE THE EXCLUSIVE PROPERTY OF IMEG CORP. AND SHALL NOT BE USED OR REPRODUCED FOR ANY OTHER PROJECT WITHOUT THE EXPRESS WRITTEN APPROVAL AND PARTICIPATION OF IMEG CORP. ©2022 IMEG CORP.

0 1 2 3
REF. SCALE IN INCHES
PROJECT #22007707.00

PLEASE RECYCLE

Project

SPARKS FIRE STATION #6

6963 WINGFIELD HILLS ROAD,
SPARKS, NV 89436

Job No: 22-043

Owner

CITY OF SPARKS

CITY OF SPARKS FIRE DEPARTMENT Est. 1905

BID SET

REVISIONS		
REV	DATE	DESCRIPTION

Sheet Title

OVERALL CEILING PLAN - LIGHTING

Date: 01/04/2024

Sheet No:

E2.00

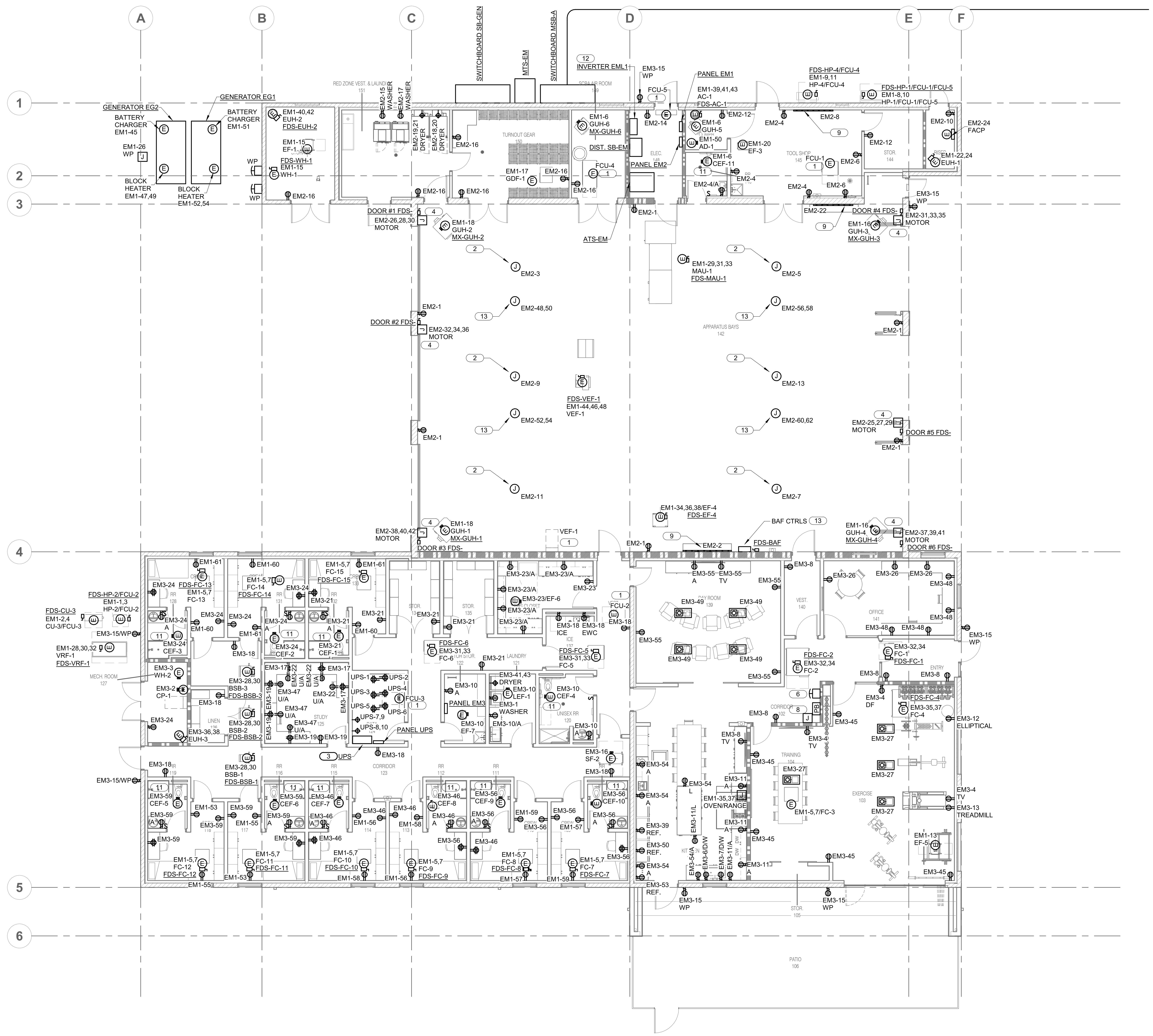

1 OVERALL FLOOR PLAN - POWER
1/8" = 1'-0"

NORTH

SHEET NOTES:

1. THE DRAWINGS REPRESENT ELECTRICAL DESIGN INTENT. THEY ARE SCHEMATIC AND DIAGRAMMATIC AND DO NO INDICATE CONSTRUCTION DETAILS OR ROUTING UNLESS OTHERWISE NOTED. THE SPECIFICATIONS ESTABLISH MINIMUM PERFORMANCE AND PRODUCT INSTALLATION REQUIREMENTS. PROVIDE PRODUCTS CONSISTENT WITH THE DESIGN INTENT AND NECESSARY FOR COMPLETE OPERATING ELECTRICAL SYSTEMS.
2. DIV. 26 CONTRACTOR SHALL PROVIDE ALL CONDUIT AND J-BOX ROUGH-IN FOR DIV. 27 AND DIV. 28 CONTRACTORS.
3. COORDINATE POWER RECEPTACLE ROUGH-IN LOCATIONS WITH SPECIAL SYSTEMS DEVICES SO THAT THE POWER RECEPTACLES ARE INSTALLED ADJACENT TO THE SPECIAL SYSTEM DEVICES.
4. IN ADDITION TO WORK SHOWN ON ELECTRICAL DRAWINGS, CONTRACTOR IS TO PROVIDE AND INSTALL ALL RACEWAY SYSTEMS AND POWER FOR ALL IT AND SECURITY SYSTEMS AS INDICATED.
5. REFER TO ARCHITECTURAL CASEWORK DETAILS TO COORDINATE ACTUAL PLACEMENT OF RECEPTACLES AND DEVICES LOCATED ABOVE COUNTERTOPS OR BELOW CASEWORK WHERE KNEE SPACES OCCUR.
6. CONDUIT AND WIRING ARE NOT BEEN SHOWN. IT IS THE RESPONSIBILITY OF THE ELECTRICAL CONTRACTOR TO PROVIDE THE NUMBER OF CONDUCTORS REQUIRED FOR HOT-LEGS, NEUTRAL, AND GROUNDING AT EACH DEVICE FOR PROPER BRANCH CIRCUITING SHOWN FOR EACH AREA OR ROOM. MINIMUM CONDUIT SIZE FOR POWER AND LIGHTING SYSTEMS SHALL BE 3/4".
7. 120/208V BRANCH CIRCUITS 100' OR GREATER IN CONDUCTOR LENGTH SHALL BE #10AWG, UNLESS OTHERWISE NOTED.
8. 277/480V BRANCH CIRCUITS 200' OR GREATER IN CONDUCTOR LENGTH SHALL BE #10 AWG, UNLESS OTHERWISE NOTED.
9. PROVIDE PULL STRING IN ALL EMPTY CONDUITS.
10. RECEPTACLES LABELED WITH "TV" SHALL BE MOUNTED IN TV BACK BOX OR AS DIRECTED BY OWNER. CONTRACTOR SHALL COORDINATE WITH USER AND ARCHITECT PRIOR TO ROUGH IN.
11. DEVICE COLORS: ALL COVER PLATES SHALL BE WHITE, UNLESS NOTED OTHERWISE. REFER TO SPECIFICATION 26 27 26.
12. LABEL ALL RECEPTACLE DEVICE PLATES WITH SOURCE PANEL AND CIRCUIT NUMBER. PROVIDE PERMANENT MACHINE GENERATED LABEL.
13. BRANCH CIRCUITS SHALL BE CONFIGURED WITH DEDICATED NEUTRALS AND INDEPENDENTLY OPERATED CIRCUIT BREAKERS.
14. BATHROOM RECPTACLE OUTLETS OR RECEPTACLE OUTLETS WITHIN 6'-0" OF A WATER SOURCE SHALL BE GFCI RATED PER NEC 210-52(d).
15. CONTRACTOR TO COORDINATE ALL CONDUIT SIZES WITH APPLICABLE EQUIPMENT/SYSTEM VENDORS PRIOR TO BID AND INSTALLATION.
16. ELECTRICAL CONTRACTOR SHALL COORDINATE EXACT LOCATION, QUANTITY, & INSTALLATION REQUIREMENTS OF ALL ELECTRICAL EQUIP. & RECEPTACLES INCLUDING MILL & COUNTER AREAS WITH ARCHITECT/OWNER PRIOR TO ROUGH IN.
17. ALL CIRCUITS SHALL HAVE AN INSULATED GROUND WIRE (BOND) SIZED PER NEC #250.95, #12 MINIMUM GROUND, WIRE NOT SHOWN ON DRAWINGS.
18. MAXIMUM NUMBER OF CONDUCTORS IN A CONDUIT SHALL NOT EXCEED 9, UNO.
19. CIRCUITS WIRED AS MULTI-WIRE BRANCH CIRCUITS SHALL HAVE A DISCONNECTING MEANS PER NEC 210.4(B).
20. ANY CONDUIT ROUTING IS SHOWN FOR REFERENCE ONLY. CONTRACTOR TO FEILD VERIFY AND ROUTE CONDUIT AND WIRING AS FIELD CONDITIONS PERMIT. INSTALL PULL/JUNCTION BOXES AS REQUIRED BY NEC.
21. ALL EQUIPMENT LOCATIONS, CONDUIT ROUTING, EQUIPMENT CONNECTIONS AND TERMINATION POINTS ARE SCHEMATIC AND SHOWN FOR REFERENCE ONLY. E.C. SHALL VERIFY AND COORDINATE EXACT REQUIREMENTS IN FIELD WITH ARCHITECT, AND EQUIPMENT VENDOR.
22. E.C. MUST COORDINATE COMPLETE ELECTRICAL INSTALLATIONS SO THAT ALL WORKING CLEARANCES FOR ALL ELECTRICAL EQUIPMENT ARE PROVIDED AS REQUIRED PER NEC 110.26. FURTHERMORE COORDINATE WITH ALL PERTINENT TRADES SO THAT ELECTRICAL INSTALLATIONS DO NOT PREVENT WORKIND AND MAINTENANCE CLEARANCES TO ANY EQUIPMENT PROVIDED BY OTHERS. THIS INCLUDES BUT IS NOT LIMITED TO EQUIPMENT ACCESS PANELS, ACCESS DOORS, CONTROL PANELS, CONTROL EQUIPMENT/ DEVICES, SCREENS, ETC.

KEYNOTES: (#)

1. SPLIT-SYSTEM INDOOR UNIT POWERED BY OUTDOOR UNIT. REFER TO MECHANICAL DRAWINGS.
2. PROVIDE 10/3 CORD DROP WITH 30 AMP RECEPTACLE. PROVIDE KELLEMS (OR APPROVED EQUAL) GRIPS AT BOTH ENDS. SUSPEND +/-3'-0" A.F.F. VERIFY NEMA CAP AND CORD CONFIGURATION AND LOCATION WITH SPARKS FIRE DEPARTMENT PRIOR TO ROUGH-IN.
3. PROVIDE 3.0 KW UPS WITH 16 MINUTE RUN TIME. EATON 9SX-3000HW OR APPROVED EQUAL.
4. CONNECT MOTORIZED ROLL-UP DOOR ASSEMBLY, INCLUDING CONTROLS. VERIFY INSTALLATION REQUIREMENTS AND ELECTRICAL CHARACTERISTICS PRIOR TO ROUGH-IN.
5. PROVIDE (1) 208V, 20A RECEPTACLE FOR POWER WASHER. VERIFY NEMA CAP AND CORD CONFIGURATION PRIOR TO ORDER.
6. PROVIDE EMERGENCY KITCHEN SHUT-OFF SWITCH. SWITCH SHALL BE 'RED MUSHROOM TYPE WITH ENGRAVED NAMEPLATE: 'KITCHEN SHUT-OFF'. VERIFY LOCATION(S) AND CONTROL REQUIREMENTS WITH OWNER PRIOR TO ROUGH-IN.
7. PROVIDE 120V CONNECTION FOR CHIME ASSEMBLIES. MULTIPLE CONNECTION POINTS. VERIFY LOCATIONS, INSTALLATION REQUIREMENTS AND ELECTRICAL CHARACTERISTICS PRIOR TO ROUGH-IN.
8. PROVIDE JUNCTION BOX AT +42" ABOVE FINISHED FLOOR FOR ACKNOWLEDGMENT SWITCH. ACKNOWLEDGMENT SWITCH AND CONTROL CABLING BY OTHERS. VERIFY LOCATION WITH FIRE DEPARTMENT PRIOR TO ROUGH-IN.
9. PROVIDE WIREMOLD 2000 SERIES, SINGLE CIRCUIT W/ RECEPTACLES 18" O.C. MOUNT ABOVE WORK BENCH.
10. CONNECT MAGNETIC RAIL ASSEMBLY PER MANUFACTURERS REQUIREMENTS.
11. EXHAUST FAN CONTROLLED VIA LOCAL WALL SWITCH IN BATHROOM.
12. PROVIDE MYERS ILLUMINATOR HYPERNOVA/SUPERNOVA EMERGENCY CENTRAL INVERTER (PART NUMBER 3-I-02-S-B-A-20-04-O) WITH 90 MIN BATTERY BACKUP AND NLIGHT AIR TIME DELAY REQUIREMENTS. REFER TO SINGLE LINE DIAGRAM & PANEL SCHEDULE FOR kVA SIZING OF THE INVERTER AND FOR OUTPUT BREAKER QUANTITY AND SIZING.
13. PROVIDE 8' BIG ASS FAN POWERFOIL D PFD1-0822 OR APPROVED EQUAL. INCLUDE MANUFACTURER MULTI-FAN CONTROLLER AND ALL REQUIRED ACCESSORIES. COORDINATE CONTROL LOCATION AND OTHER REQUIREMENTS WITH ARCHITECT PRIOR TO ROUGH-IN.

tsk
314 South Water Street,
Suite 100
Henderson, NV 89015
phone: 702.456.3000
fax: 702.898.6209
www.tska.com

PROFESSIONAL ENGINEER STATE OF NEVADA
VENKATESH THUMALA JANAKIRAMAN
Exp: 06/30/2025
ELECTRICAL
No. 030510
01/03/2024

THESE DRAWINGS AND SPECIFICATIONS ARE THE PROPERTY OF TATE SNYDER KIMSEY ARCHITECTS AND MAY NOT BE REPRODUCED OR USED FOR ANY PURPOSE WITHOUT THE ARCHITECTS WRITTEN CONSENT. AS INSTRUMENTS OF SERVICE, THESE DOCUMENTS ARE NOT FINAL AND READY FOR USE, AND THEREFORE NOT VALID, UNLESS THEY ARE SEALED, SIGNED AND DATED.

Consultant

IMEG
4599 LONGLEY LANE
RENO, NV 89502
P: 775.826.4889
PROJECT #22007707.00
www.imegcorp.com

IMEG CORP. RESERVES PROPRIETARY RIGHTS, INCLUDING COPYRIGHTS, TO THIS DRAWING AND THE DATA SHOWN THEREON. SAID DRAWING AND/OR DATA ARE THE EXCLUSIVE PROPERTY OF IMEG CORP. AND SHALL NOT BE USED OR REPRODUCED FOR ANY OTHER PROJECT WITHOUT THE EXPRESS WRITTEN APPROVAL AND PARTICIPATION OF IMEG CORP. ©2022 IMEG CORP.

0 1 2 3
REF. SCALE IN INCHES — PROJECT #22007707.00

PLEASE RECYCLE

Project
SPARKS FIRE STATION #6

6963 WINGFIELD HILLS ROAD,
SPARKS, NV 89436

Job No: 22-043

Owner
CITY OF SPARKS

BID SET

REVISIONS		
REV	DATE	DESCRIPTION

Sheet Title
OVERALL FLOOR PLAN - POWER

Date: 01/04/2024
Sheet No:

E2.10

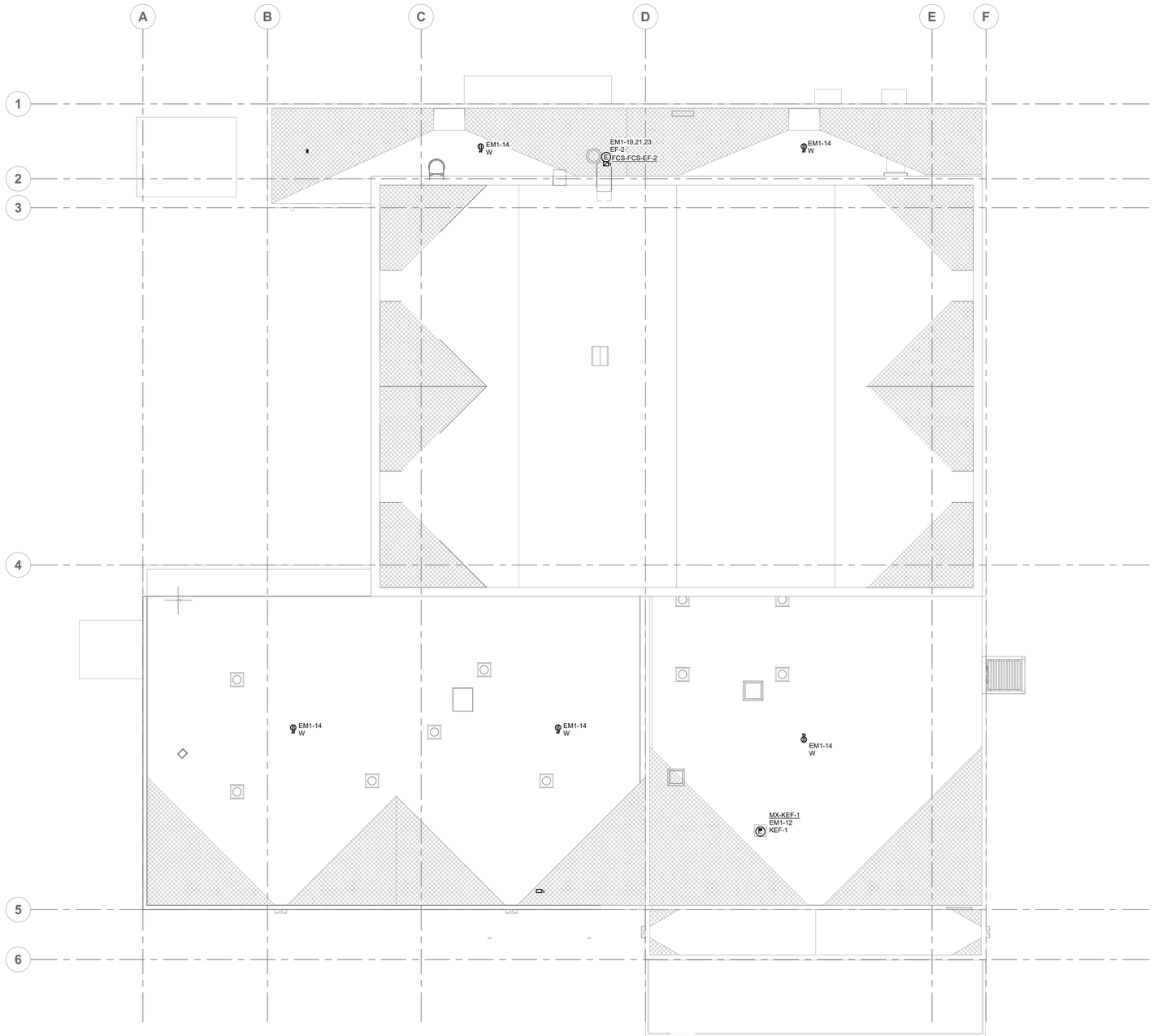

NORTH

1 **OVERALL ROOF PLAN - POWER**

1/8" = 1'-0"

SHEET NOTES:

1. THE DRAWINGS REPRESENT ELECTRICAL DESIGN INTENT. THEY ARE SCHEMATIC AND DIAGRAMMATIC AND DO NO INDICATE CONSTRUCTION DETAILS OR ROUTING UNLESS OTHERWISE NOTED. THE SPECIFICATIONS ESTABLISH MINIMUM PERFORMANCE AND PRODUCT INSTALLATION REQUIREMENTS. PROVIDE PRODUCTS CONSISTENT WITH THE DESIGN INTENT AND NECESSARY FOR COMPLETE OPERATING ELECTRICAL SYSTEMS.
2. DIV. 26 CONTRACTOR SHALL PROVIDE ALL CONDUIT AND J-BOX ROUGH-IN FOR DIV. 27 AND DIV. 28 CONTRACTORS.
3. COORDINATE POWER RECEPTACLE ROUGH-IN LOCATIONS WITH SPECIAL SYSTEMS DEVICES SO THAT THE POWER RECEPTACLES ARE INSTALLED ADJACENT TO THE SPECIAL SYSTEM DEVICES.
4. IN ADDITION TO WORK SHOWN ON ELECTRICAL DRAWINGS, CONTRACTOR IS TO PROVIDE AND INSTALL ALL RACEWAY SYSTEMS AND POWER FOR ALL IT AND SECURITY SYSTEMS AS INDICATED.
5. REFER TO ARCHITECTURAL CASEWORK DETAILS TO COORDINATE ACTUAL PLACEMENT OF RECEPTACLES AND DEVICES LOCATED ABOVE COUNTERTOPS OR BELOW CASEWORK WHERE KNEE SPACES OCCUR.
6. CONDUIT AND WIRING ARE NOT BEEN SHOWN. IT IS THE RESPONSIBILITY OF THE ELECTRICAL CONTRACTOR TO PROVIDE THE NUMBER OF CONDUCTORS REQUIRED FOR HOT-LEGS, NEUTRAL, AND GROUNDING AT EACH DEVICE FOR PROPER BRANCH CIRCUITING SHOWN FOR EACH AREA OR ROOM. MINIMUM CONDUIT SIZE FOR POWER AND LIGHTING SYSTEMS SHALL BE 3/4".
7. 120/208V BRANCH CIRCUITS 100' OR GREATER IN CONDUCTOR LENGTH SHALL BE #10AWG, UNLESS OTHERWISE NOTED.
8. 277/480V BRANCH CIRCUITS 200' OR GREATER IN CONDUCTOR LENGTH SHALL BE #10 AWG, UNLESS OTHERWISE NOTED.
9. PROVIDE PULL STRING IN ALL EMPTY CONDUITS.
10. RECEPTACLES LABELED WITH "TV" SHALL BE MOUNTED IN TV BACK BOX OR AS DIRECTED BY OWNER. CONTRACTOR SHALL COORDINATE WITH USER AND ARCHITECT PRIOR TO ROUGH IN.
11. DEVICE COLORS: ALL COVER PLATES SHALL BE WHITE, UNLESS NOTED OTHERWISE. REFER TO SPECIFICATION 26 27 26.
12. LABEL ALL RECEPTACLE DEVICE PLATES WITH SOURCE PANEL AND CIRCUIT NUMBER. PROVIDE PERMANENT MACHINE GENERATED LABEL.
13. BRANCH CIRCUITS SHALL BE CONFIGURED WITH DEDICATED NEUTRALS AND INDEPENDENTLY OPERATED CIRCUIT BREAKERS.
14. SATHROOM RECPTACLE OUTLETS OR RECEPTACLE OUTLETS WITHIN 6'-0" OF A WATER SOURCE SHALL BE GFCI RATED PER NEC 210-52(d).
15. CONTRACTOR TO COORDINATE ALL CONDUIT SIZES WITH APPLICABLE EQUIPMENT/SYSTEM VENDORS PRIOR TO BID AND INSTALLATION.
16. ELECTRICAL CONTRACTOR SHALL COORDINATE EXACT LOCATION, QUANTITY, & INSTALLATION REQUIREMENTS OF ALL ELECTRICAL EQUIP. & RECEPTACLES INCLUDING MILL & COUNTER AREAS WITH ARCHITECT/OWNER PRIOR TO ROUGH IN.
17. ALL CIRCUITS SHALL HAVE AN INSULATED GROUND WIRE (BOND) SIZED PER NEC #250.95, #12 MINIMUM GROUND, WIRE NOT SHOWN ON DRAWINGS.
18. MAXIMUM NUMBER OF CONDUCTORS IN A CONDUIT SHALL NOT EXCEED 9, UNO.
19. CIRCUITS WIRED AS MULTI-WIRE BRANCH CIRCUITS SHALL HAVE A DISCONNECTING MEANS PER NEC 210.4(B).
20. ANY CONDUIT ROUTING IS SHOWN FOR REFERENCE ONLY. CONTRACTOR TO FEILD VERIFY AND ROUTE CONDUIT AND WIRING AS FIELD CONDITIONS PERMIT. INSTALL PULL/JUNCTION BOXES AS REQUIRED BY NEC.
21. ALL EQUIPMENT LOCATIONS, CONDUIT ROUTING, EQUIPMENT CONNECTIONS AND TERMINATION POINTS ARE SCHEMATIC AND SHOWN FOR REFERENCE ONLY. E.C. SHALL VERIFY AND COORDINATE EXACT REQUIREMENTS IN FIELD WITH ARCHITECT, AND EQUIPMENT VENDOR.
22. E.C. MUST COORDINATE COMPLETE ELECTRICAL INSTALLATIONS SO THAT ALL WORKING CLEARANCES FOR ALL ELECTRICAL EQUIPMENT ARE PROVIDED AS REQUIRED PER NEC 110.26. FURTHERMORE COORDINATE WITH ALL PERTINENT TRADES SO THAT ELECTRICAL INSTALLATIONS DO NOT PREVENT WORKIND AND MAINTENANCE CLEARANCES TO ANY EQUIPMENT PROVIDED BY OTHERS. THIS INCLUDES BUT IS NOT LIMITED TO EQUIPMENT ACCESS PANELS, ACCESS DOORS, CONTROL PANELS, CONTROL EQUIPMENT/ DEVICES, SCREENS, ETC.

KEYNOTES: (#)

1. .
2. .
3. .

tsk

314 South Water Street,
Suite 100
Henderson, NV 89015
phone: 702.456.3000
fax: 702.898.6209
www.tska.com

PROFESSIONAL ENGINEER - STATE OF NEVADA
VENKATESH THIMMA JANARDHAN
Exp:06/30/2025
ELECTRICAL
No. 03051D
01/03/2024

THESE DRAWINGS AND SPECIFICATIONS ARE THE PROPERTY OF TATE SNYDER KIMSEY ARCHITECTS AND MAY NOT BE REPRODUCED OR USED FOR ANY PURPOSE WITHOUT THE ARCHITECTS WRITTEN CONSENT. AS INSTRUMENTS OF SERVICE, THESE DOCUMENTS ARE NOT FINAL AND READY FOR USE, AND THEREFORE NOT VALID, UNLESS THEY ARE SEALED, SIGNED AND DATED.

Consultant

IMEG
www.imeg.com
4599 LONGLEY LANE
RENO, NV 89502
P: 775.828.4599
PROJECT #22007707.00

IMEG CORP. RESERVES PROPRIETARY RIGHTS, INCLUDING COPYRIGHTS, TO THIS DRAWING AND THE DATA SHOWN THEREON. SAID DRAWING AND/OR DATA ARE THE EXCLUSIVE PROPERTY OF IMEG CORP. AND SHALL NOT BE USED OR REPRODUCED FOR ANY OTHER PROJECT WITHOUT THE EXPRESS WRITTEN APPROVAL AND PARTICIPATION OF IMEG CORP. ©2022 IMEG CORP.

0 1 2 3
REF. SCALE IN INCHES PROJECT #22007707.00

PLEASE RECYCLE

Project

SPARKS FIRE STATION #6

6963 WINGFIELD HILLS ROAD,
SPARKS, NV 89436

Job No: 22-043

Owner

CITY OF SPARKS

CITY OF SPARKS FIRE DEPARTMENT Est. 1905

BID SET

REVISIONS		
REV	DATE	DESCRIPTION

Sheet Title

OVERALL ROOF PLAN - POWER

Date: 01/04/2024

Sheet No:

E3.00

COM*check* Software Version 4.1.5.3

Interior Lighting Compliance Certificate

Project Information

Energy Code: 2018 IECC
Project Title: Sparks Fire Station #6
Project Type: New Construction

Construction Site:
Wingfield Hills Road
Sparks, NV 89436

Owner/Agent:

Designer/Contractor:
IMEG Corp.
4599 LONGLEY LANE
RENO, NV 85902
775.828.4889

Additional Efficiency Package(s)

Credits: 1.0 Required 1.0 Proposed
Reduced Lighting Power, 1.0 credit

Allowed Interior Lighting Power

A Area Category	B Floor Area (ft2)	C Allowed Watts / ft2	D Allowed Watts (B X C)
1-Fire Station	13580	0.48	6478
		Total Allowed Watts =	6478

Proposed Interior Lighting Power

A Fixture ID : Description / Lamp / Wattage Per Lamp / Ballast	B Lamps/ Fixture	C # of Fixtures	D Fixture Watt.	E (C X D)
1-Fire Station				
LED 1: L1: 4' LED Strip: Other:	1	23	41	943
LED 2: L2: 1'x4' LED Recessed: Other:	1	19	6	114
LED 3: L3: 2'x4' LED Recessed Troffer: Other:	1	22	40	880
LED 4: L4: 2'x2' LED Recessed Troffer: Other:	1	35	24	840
LED 5: L5: Vanity Light: Other:	1	11	24	264
LED 6: L7: 6" Recessed Downlight: Other:	1	74	10	740
LED 7: L8: 12'LED Pendant Mounted: Other:	1	8	12	96
LED 8: L9: 4'LED Pendant Mounted: Other:	1	24	12	288
LED 9: L10: 4' LED Wall Mount: Other:	1	15	6	90
		Total Proposed Watts =		4255

Interior Lighting PASSES: Design 34% better than code

Interior Lighting Compliance Statement

Compliance Statement: The proposed interior lighting design represented in this document is consistent with the building plans, specifications, and other calculations submitted with this permit application. The proposed interior lighting systems have been designed to meet the 2018 IECC requirements in COM*check* Version 4.1.5.3 and to comply with any applicable mandatory requirements listed in the Inspection Checklist.

Hans Rasmussen - Electrical Designer — Name - Title
Signature
05.30.2023 — Date

COM*check* Software Version 4.1.5.3

Exterior Lighting Compliance Certificate

Project Information

Energy Code: 2018 IECC
Project Title: Sparks Fire Station #6
Project Type: New Construction
Exterior Lighting Zone 2 (Residential mixed use area (LZ2))

Construction Site:
Wingfield Hills Road
Sparks, NV 89436

Owner/Agent:

Designer/Contractor:
IMEG Corp.
4599 LONGLEY LANE
RENO, NV 85902
775.828.4889

Allowed Exterior Lighting Power

A Area/Surface Category	B Quantity	C Allowed Watts / Unit	D Tradable Wattage	E Allowed Watts (B X C)
Parking area	8264 ft2	0.04	Yes	331
Driveway	23720 ft2	0.04	Yes	949
Pedestrian and vehicular entrances and exits	94 ft of door	14	Yes	1316
		Total Tradable Watts (a) =		2595
		Total Allowed Watts =		2595
		Total Allowed Supplemental Watts (b) =		400

(a) Wattage tradeoffs are only allowed between tradable areas/surfaces.
(b) A supplemental allowance equal to 400 watts may be applied toward compliance of both non-tradable and tradable areas/surfaces.

Proposed Exterior Lighting Power

A Fixture ID : Description / Lamp / Wattage Per Lamp / Ballast	B Lamps/ Fixture	C # of Fixtures	D Fixture Watt.	E (C X D)
Parking area (8264 ft2): Tradable Wattage				
LED 1: S3: Area Pole Light: Other:	1	70	3	210
Driveway (23720 ft2): Tradable Wattage				
LED 1: S3: Area Pole Light: Other:	1	70	7	490
Pedestrian and vehicular entrances and exits (94 ft of door width): Tradable Wattage				
LED 3: W2: Ext. Wall Mount: Other:	1	3	27	81
LED 4: W3: Ext. Wall Mount: Other:	1	1	44	44
LED 5: W1: Ext. Recessed Linear: Other:	1	2	560	1120
		Total Tradable Proposed Watts =		1945

Exterior Lighting PASSES: Design 35% better than code

Exterior Lighting Compliance Statement

Compliance Statement: The proposed exterior lighting design represented in this document is consistent with the building plans, specifications, and other calculations submitted with this permit application. The proposed exterior lighting systems have been designed to meet the 2018 IECC requirements in COM*check* Version 4.1.5.3 and to comply with any applicable mandatory requirements listed in the Inspection Checklist.

Hans Rasmussen - Electrical Designer — Name - Title
Signature
05.30.2023 — Date

COM*check* Software Version 4.1.5.3

Inspection Checklist

Energy Code: 2018 IECC

Requirements: 71.0% were addressed directly in the COM*check* software

Text in the "Comments/Assumptions" column is provided by the user in the COMcheck Requirements screen. For each requirement, the user certifies that a code requirement will be met and how that is documented, or that an exception is being claimed. Where compliance is itemized in a separate table, a reference to that table is provided.

Section # & Req.ID	Plan Review	Complies?	Comments/Assumptions
C103.2 [PR4][1]	Plans, specifications, and/or calculations provide all information with which compliance can be determined for the interior lighting and electrical systems and equipment and document where exceptions to the standard are claimed. Information provided should include interior lighting power calculations, wattage of bulbs and ballasts, transformers and control devices.	☐Complies ☐Does Not ☐Not Observable ☐Not Applicable	Requirement will be met. **Location on plans/spec:** E0.10
C103.2 [PR8][1]	Plans, specifications, and/or calculations provide all information with which compliance can be determined for the exterior lighting and electrical systems and equipment and document where exceptions to the standard are claimed. Information provided should include exterior lighting power calculations, wattage of bulbs and ballasts, transformers and control devices.	☐Complies ☐Does Not ☐Not Observable ☐Not Applicable	Requirement will be met. **Location on plans/spec:** E01.0, E2.00
C406 [PR9][1]	Plans, specifications, and/or calculations provide all information with which compliance can be determined for the additional energy efficiency package options.	☐Complies ☐Does Not ☐Not Observable ☐Not Applicable	

Additional Comments/Assumptions:

1 High Impact (Tier 1)	2 Medium Impact (Tier 2)	3 Low Impact (Tier 3)

Section # & Req.ID	Rough-In Electrical Inspection	Complies?	Comments/Assumptions
C405.2.2.2 [EL22][1]	Spaces required to have light-reduction controls have a manual control that allows the occupant to reduce the connected lighting load in a reasonably uniform illumination pattern >= 50 percent.	☐Complies ☐Does Not ☐Not Observable ☐Not Applicable	**Exception:** Lighting that is related to means of egress in stairways, ramps, corridors, or emergency routes.
C405.2.1.1, C405.2.1.1 [EL18][1]	Occupancy sensors installed in classrooms/lecture/training rooms, conference/meeting/multipurpose rooms, copy/print rooms, lounges/breakrooms, enclosed offices, open plan office areas, restrooms, storage rooms, locker rooms, warehouse storage areas, and other spaces <= 300 sqft that are enclosed by floor-to-ceiling height partitions. Reference section language C405.2.1.2 for control function in warehouses and section C405.2.1.3 for open plan office spaces.	☐Complies ☐Does Not ☐Not Observable ☐Not Applicable	Requirement will be met. **Location on plans/spec:** E2.00
C405.2.1.2 [EL19][1]	Occupancy sensors control function in warehouses: In warehouses, the lighting in aisleways and open areas is controlled with occupant sensors that automatically reduce lighting power by 50% or more when the areas are unoccupied. The occupant sensors control lighting in each aisleway independently and do not control lighting beyond the aisleway being controlled by the sensor.	☐Complies ☐Does Not ☐Not Observable ☐Not Applicable	Requirement will be met. **Location on plans/spec:** E2.00
C405.2.1.3 [EL20][1]	Occupant sensor control function in open plan office areas: Occupant sensor controls in open office spaces >= 300 sq.ft. have controls 1) configured so that general lighting can be controlled separately in control zones with floor areas <= 600 sq.ft. within the space, 2) automatically turn off general lighting in all control zones within 20 minutes after all occupants have left the space, 3) are configured so that general lighting power in each control zone is reduced by >= 80% of the full zone general lighting power within 20 minutes of all occupants leaving that control zone, and 4) are configured such that any daylight responsive control will activate space general lighting or control zone general lighting only when occupancy for the same area is detected.	☐Complies ☐Does Not ☐Not Observable ☐Not Applicable	Requirement will be met. **Location on plans/spec:** E2.00
C405.2.2, C405.2.2.1, C405.2.2.2 [EL21][1]	Each area not served by occupancy sensors (per C405.2.1) have time-switch controls and functions detailed in sections C405.2.2.1 and C405.2.2.2.	☐Complies ☐Does Not ☐Not Observable ☐Not Applicable	**Exception:** Lighting controlled by occupancy sensors.

1 High Impact (Tier 1)	2 Medium Impact (Tier 2)	3 Low Impact (Tier 3)

Section # & Req.ID	Rough-In Electrical Inspection	Complies?	Comments/Assumptions
C405.2.3, C405.2.3.1, C405.2.3.2 [EL23][1]	Daylight zones provided with individual controls that control the lights independent of general area lighting. See code section C405.2.3 Daylight-responsive controls for applicable spaces, C405.2.3.1 Daylight responsive control function and section C405.2.3.2 Sidelit zone.	☐Complies ☐Does Not ☐Not Observable ☐Not Applicable	**Exception:** Requirement does not apply.
C405.2.4 [EL26][1]	Separate lighting control devices for specific uses installed per approved lighting plans.	☐Complies ☐Does Not ☐Not Observable ☐Not Applicable	Requirement will be met. **Location on plans/spec:** E2.00
C405.2.4 [EL27][1]	Additional interior lighting power allowed for special functions per the approved lighting plans and is automatically controlled and separated from general lighting.	☐Complies ☐Does Not ☐Not Observable ☐Not Applicable	Requirement will be met.
C405.2.5 [EL28][1][a]	Automatic lighting controls for exterior lighting installed. Controls will be daylight controlled, set based on business operation time-of-day, or reduce connected lighting > 30%.	☐Complies ☐Does Not ☐Not Observable ☐Not Applicable	Requirement will be met. **Location on plans/spec:** E2.00
C405.3 [EL6][1]	Exit signs do not exceed 5 watts per face.	☐Complies ☐Does Not ☐Not Observable ☐Not Applicable	Requirement will be met. **Location on plans/spec:** E0.10
C405.6 [EL26][2]	Low-voltage dry-type distribution electric transformers meet the minimum efficiency requirements of Table C405.6.	☐Complies ☐Does Not ☐Not Observable ☐Not Applicable	
C405.7 [EL27][2]	Electric motors meet the minimum efficiency requirements of Tables C405.7(1) through C405.7(4). Efficiency verified through certification under an approved certification program or the equipment efficiency ratings shall be provided by motor manufacturer (where certification programs do not exist).	☐Complies ☐Does Not ☐Not Observable ☐Not Applicable	
C405.8.2, C405.8.2.1 [EL28][2]	Escalators and moving walks comply with ASME A17.1/CSA B44 and have automatic controls configured to reduce speed to the minimum permitted speed in accordance with ASME A17.1/CSA B44 or applicable local code when not conveying passengers.	☐Complies ☐Does Not ☐Not Observable ☐Not Applicable	
C405.9 [EL29][2]	Total voltage drop across the combination of feeders and branch circuits <= 5%.	☐Complies ☐Does Not ☐Not Observable ☐Not Applicable	

Additional Comments/Assumptions:

1 High Impact (Tier 1)	2 Medium Impact (Tier 2)	3 Low Impact (Tier 3)

Section # & Req.ID	Final Inspection	Complies?	Comments/Assumptions
C303.3, C408.2.5.2 [FI17][1]	Furnished O&M instructions for systems and equipment to the building owner or designated representative.	☐Complies ☐Does Not ☐Not Observable ☐Not Applicable	Requirement will be met.
C405.4.1 [FI18][1]	Interior installed lamp and fixture lighting power is consistent with what is shown on the approved lighting plans, demonstrating proposed watts are less than or equal to allowed watts.	☐Complies ☐Does Not ☐Not Observable ☐Not Applicable	*See the Interior Lighting fixture schedule for values.*
C405.5.1 [FI19][1]	Exterior lighting power is consistent with what is shown on the approved lighting plans, demonstrating proposed watts are less than or equal to allowed watts.	☐Complies ☐Does Not ☐Not Observable ☐Not Applicable	*See the Exterior Lighting fixture schedule for values.*
C408.1.1 [FI57][1]	Building operations and maintenance documents will be provided to the owner. Documents will cover manufacturers' information, specifications, programming procedures and means of illustrating to owner how building, equipment and systems are intended to be installed, maintained, and operated.	☐Complies ☐Does Not ☐Not Observable ☐Not Applicable	
C408.2.5.1 [FI16][1]	Furnished as-built drawings for electric power systems within 90 days of system acceptance.	☐Complies ☐Does Not ☐Not Observable ☐Not Applicable	Requirement will be met.
C408.3 [FI33][1]	Lighting systems have been tested to ensure proper calibration, adjustment, programming, and operation.	☐Complies ☐Does Not ☐Not Observable ☐Not Applicable	Requirement will be met.

Additional Comments/Assumptions:

1 High Impact (Tier 1)	2 Medium Impact (Tier 2)	3 Low Impact (Tier 3)

tsk
314 South Water Street,
Suite 100
Henderson, NV 89015
phone: 702.456.3000
fax: 702.898.6209
www.tska.com

PROFESSIONAL ENGINEER — STATE OF NEVADA
VENKATESH TRIMALA JANARDHAN
Exp:06/30/2025
ELECTRICAL
No. 030510
01/03/2024

THESE DRAWINGS AND SPECIFICATIONS ARE THE PROPERTY OF TATE SNYDER KIMSEY ARCHITECTS AND MAY NOT BE REPRODUCED OR USED FOR ANY PURPOSE WITHOUT THE ARCHITECTS WRITTEN CONSENT. AS INSTRUMENTS OF SERVICE, THESE DOCUMENTS ARE NOT FINAL AND READY FOR USE, AND THEREFORE NOT VALID, UNLESS THEY ARE SEALED, SIGNED AND DATED.

Consultant

IMEG
www.imeg.com
4599 LONGLEY LANE
RENO, NV 89502
P: 775.828.4889
PROJECT #22007707.00

IMEG CORP. RESERVES PROPRIETARY RIGHTS, INCLUDING COPYRIGHTS, TO THIS DRAWING AND THE DATA SHOWN THEREON. SAID DRAWING AND/OR DATA ARE THE EXCLUSIVE PROPERTY OF IMEG CORP. AND SHALL NOT BE USED OR REPRODUCED FOR ANY OTHER PROJECT WITHOUT THE EXPRESS WRITTEN APPROVAL AND PARTICIPATION OF IMEG CORP. ©2022 IMEG CORP.

0 1 2 3
REF. SCALE IN INCHES PROJECT #22007707.00

PLEASE RECYCLE

Project
SPARKS FIRE STATION #6

6963 WINGFIELD HILLS ROAD, SPARKS, NV 89436

Job No: 22-043

Owner
CITY OF SPARKS

BID SET

REVISIONS		
REV	DATE	DESCRIPTION
1	05/31/23	Plan Check Responses

Sheet Title
ELECTRICAL IECC

Date: 01/04/2024
Sheet No:
E8.01

VIEW KEY

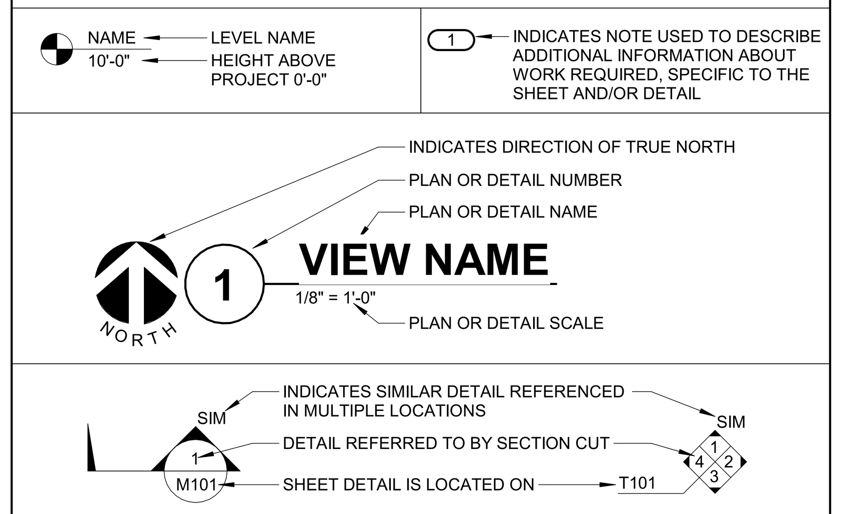

LINE TYPE AND TAG KEY:

NEW WORK BY THIS CONTRACTOR (WIDE LINE)
- NEW
- EXISTING TO BE REMOVED (SHORT DASHED PATTERN)
- NEW UNDERFLOOR OR UNDERGROUND (LONG DASHED PATTERN)

EXISTING TO REMAIN OR WORK BY OTHERS (NARROW LINE)
- EXISTING
- EXISTING TO BE REMOVED BY OTHERS (SHORT DASHED PATTERN)
- EXISTING UNDERFLOOR OR UNDERGROUND (LONG DASHED PATTERN)

HALFTONING DOES NOT MODIFY SCOPE.

'TAG'-E	TAGS WITH DASH 'E' INDICATES THE REFERENCED OBJECT IS EXISTING
TAG	UNDERLINED TAG INDICATES OBJECT IS IN-SCOPE. IF NEW, ADDITIONAL INFORMATION IS AVAILABLE IN A SCHEDULE, MATERIAL LIST, OR SYMBOL LIST
⊕	INDICATES AN EXISTING SYSTEM'S POINT OF CONNECTION/REMOVAL

FIRE / SMOKE BARRIER DESIGNATIONS

THE CONTRACTOR SHALL VERIFY RATINGS WITH THE LATEST SET OF ARCHITECTURAL PLANS AND FURNISH ALL MATERIALS REQUIRED TO COMPLY WITH THOSE RATINGS WHETHER SHOWN OR NOT.

APPLICABLE CODES

CONTRACTOR SHALL COMPLY WITH APPLICABLE CODES AND LOCAL AMENDMENTS.

BUILDING CODE:	IBC 2018 EDITION
FIRE CODE:	IFC 2018 EDITION
PLUMBING CODE:	UPC 2018 EDITION
MECHANICAL CODE:	UMC 2018 EDITION
ELECTRICAL CODE:	NFPA 70 (NEC) 2017 EDITION
LIFE SAFETY CODE:	NFPA 101 2017 EDITION
ENERGY CONSERVATION CODE:	IECC 2018
HEALTH DEPARTMENT CODE:	CURRENT EDITION
LOCAL BUILDING CODE:	CURRENT EDITION

TECHNOLOGY ABBREVIATION KEY

ABBR:	DESCRIPTION:
AFF	ABOVE FINISHED FLOOR
AFG	ABOVE FINISHED GRADE
BFC	BELOW FINISHED CEILING
C	CONDUIT
DE	DELAYED EGRESS
DPDT	DOUBLE POLE DOUBLE THROW
FOV	FIELD OF VIEW
J-BOX	JUNCTION BOX
POE	POWER OVER ETHERNET
PTZ	PAN TILT ZOOM
SIM	SIMILAR
TYP	TYPICAL
UON	UNLESS OTHERWISE NOTED
+#	MOUNTING HEIGHT ABOVE FINISHED FLOOR
EF-#	ENTRANCE FACILITY
MC-#	MAIN CROSS-CONNECT
TR-#	TELECOMMUNICATIONS ROOM

TECHNOLOGY SYMBOL LIST

SYMBOL:	EQUIPMENT LIST ABBREV.:	DESCRIPTION:	NOTE:
C#	SC-IO-W	INFORMATION OUTLET (WALL)	1.
W	SC-IO-W	INFORMATION OUTLET WALL PHONE (WALL)	1.
C#	SC-IO-C	INFORMATION OUTLET (CEILING)	1.
R#	AC-R#-W	SECURITY CREDENTIAL READER (WALL)	.
E DR#	AC-DR#-S	SECURITY ELECTRONIC DOOR RELEASE (SURFACE)	.
S	AV-SP1-C	AV PERFORMANCE SPEAKER (CEILING)	.
S	AV-SP1-W	AV PERFORMANCE SPEAKER (WALL)	.
V VC#	AV-VC#-W	AV VOLUME CONTROL (WALL)	.
K KP#	AV-KP#-W	AV KEYPAD (WALL)	.
CM-# ##-##	VS-CM-#	VIDEO SURVEILLANCE CAMERA 180° FOV (WALL/VERTICAL SURFACE)	4.
CM-# ##-##	VS-CM-#	VIDEO SURVEILLANCE CAMERA 360° FOV (WALL/VERTICAL SURFACE)	4.
CM-# ##-##	VS-CM-#	VIDEO SURVEILLANCE CAMERA SINGLE LENS FOV (CEILING/HORIZONTAL SURFACE)	4.
CM-# ##-##	VS-CM-#	VIDEO SURVEILLANCE CAMERA SINGLE LENS FOV (WALL/VERTICAL SURFACE)	4.
WIDTH X HEIGHT		CABLE TRAY, CHANNEL TRAY, BASKET TRAY	
WIDTH X HEIGHT		LADDER RACK	
DIAMETERø C		CONDUIT	
		CONDUIT DOWN	
		CONDUIT UP OR UP/DOWN	
		CONDUIT SLEEVE	
		CONTINUATION	

GENERAL NOTES:

1. ALL SYMBOLS AND ABBREVIATIONS LISTED MAY NOT BE APPLICABLE TO THIS PROJECT. REFER TO THE TECHNOLOGY EQUIPMENT SCHEDULE FOR MORE COMPLETE DESCRIPTION AND ITEMS.
2. ALL SYMBOLS AND ABBREVIATIONS REFER TO TECHNOLOGY SHEETS ONLY AS DEFINED ON THE SHEET INDEX. REFER TO THE GENERAL TECHNOLOGY NOTES FOR ADDITIONAL INFORMATION.
3. ALL SYMBOLS LISTED ABOVE ARE FOR REFERENCE ONLY. REFER TO PLANS AND LINE TYPE KEY FOR NEW, EXISTING TO REMAIN AND TO BE REMOVED ITEMS FOR ADDITIONAL INFORMATION.
4. REFER TO RISERS ON SHEET T0.12.

TECHNOLOGY SYMBOL NOTES:

1. "C#" INDICATES INFORMATION OUTLET FACEPLATE CONFIGURATION. REFER TO INFORMATION OUTLET SCHEDULE ON T0.20 FOR ADDITIONAL INFORMATION.
2. REFER TO CONTROLLED SECURITY SCHEME (CSS) TYPE SCHEDULE [ENHANCED SECURITY SCHEME (ESS)] ON T0.20 FOR ADDITIONAL INFORMATION.
3. "CM-#" ON FLOOR PLANS INDICATES CAMERA TYPE AND IS ASSOCIATED WITH THE CORRESPONDING "VS-CM-#" EQUIPMENT SCHEDULE ABBREVIATION.
4. INFORMATION OUTLET INSTALLED IN E.C. PROVIDED FLOOR BOX. "C#" INDICATES INFORMATION OUTLET FACEPLATE CONFIGURATION. REFER TO INFORMATION OUTLET SCHEDULE ON T0.20 FOR ADDITIONAL INFORMATION. REFER TO THE ELECTRICAL FLOOR PLANS AND ELECTRICAL EQUIPMENT SCHEDULE FOR ADDITIONAL INFORMATION.

SUGGESTED MATRIX OF RESPONSIBILITY

ITEM:	SHOWN ON:	FURNISHED BY:	INSTALLED BY:	NOTES:
TECHNOLOGY ROUGH-IN, REFER TO TECHNOLOGY EQUIPMENT SCHEDULE AND SPECIFICATIONS FOR DEFINITION	T-SERIES	E.C.	E.C.	3. 4.
INFORMATION OUTLET FACEPLATES, JACKS, AND TERMINATIONS	T-SERIES	T.C.	T.C.	
CONDUIT SLEEVES (WHEN SHOWN ON DRAWINGS)	T-SERIES	E.C.	E.C.	
CONDUIT SLEEVES (NOT SHOWN BUT REQUIRED FOR PROPER INSTALLATION OF SYSTEM)	N/A	T.C.	T.C.	2. 4.
TELECOMMUNICATION SYSTEMS ROUGH-IN	T-SERIES	E.C. [T.C]	E.C.	1.
TELECOMMUNICATION EQUIPMENT, CABLING, AND TERMINATIONS	T-SERIES	T.C.	T.C.	
CABLE TRAY (INCLUDING WIRE BASKET TRAY) REFER TO SPECIFICATION SECTION 27 05 28 FOR DEFINITION	T-SERIES	E.C.	E.C.	
LADDER RACK	T-SERIES	T.C.	T.C.	5.
GROUNDING LUGS ON TECHNOLOGY EQUIPMENT	T-SERIES	T.C.	E.C.	6.
BONDING SYSTEM FOR TECHNOLOGY SYSTEM, REFER TO SPECIFICATION SECTION 27 05 26 FOR DEFINITION	T-SERIES	E.C.	E.C.	7. 8.
CONNECTION OF TECHNOLOGY BONDING SYSTEM TO THE ELECTRICAL GROUND SYSTEM	T-SERIES	E.C.	E.C.	
LINE VOLTAGE POWER (+120V OR GREATER)	E-SERIES	E.C.	E.C.	
LINE VOLTAGE POWER (NOT SHOWN BUT REQUIRED FOR PROPER INSTALLATION OF SYSTEM)	N/A	T.C.	E.C.	2. 4.
LINE VOLTAGE POWER FOR DOOR HARDWARE POWER SUPPLIES	ARCH SPEC	E.C.	E.C.	
LOW VOLTAGE CABLING FOR TECHNOLOGY SYSTEMS	T-SERIES	T.C.	T.C.	
CABLE HANGERS AND SUPPORTS OR OTHER CABLE ROUTING METHODS (OTHER THAN CONDUIT AND CABLE TRAY)	T-SERIES	T.C.	T.C.	5.
TECHNOLOGY SERVICE ENTRANCE CONDUITS, HANDHOLES, AND MANHOLES	[E]T-SERIES	E.C.	E.C.	
FLOOR BOX (ROUGH-IN)	T & E SERIES	E.C.	E.C.	

SUGGESTED MATRIX OF RESPONSIBILITY NOTES

1. LOCATIONS OF TELECOMMUNICATIONS ROUGH-INS SHALL BE INDICATED BY THE INFORMATION OUTLET SYMBOLS ON THE DRAWINGS. REFER TO THE TECHNOLOGY SYMBOL LIST FOR ADDITIONAL INFORMATION.
2. BASED ON THE INHERENT DIFFERENCES IN PRODUCTS FROM VARIOUS MANUFACTURERS, ALL REQUIRED EQUIPMENT MAY NOT BE SHOWN ON THE DRAWINGS FOR ALL ACCEPTABLE MANUFACTURERS.
3. INCLUDES BACKBOXES AND CONDUIT REQUIRED FOR THE TECHNOLOGY SYSTEMS INSTALLATION. THE E.C. SHALL BASE THE BID ON THE BASIS OF DESIGN SHOWN ON THE CONTRACT DOCUMENTS.
4. ALL CHANGES TO THE SLEEVES, BACKBOXES, CONDUITS, AND POWER REQUIRED BECAUSE OF THE T.C.'S SELECTION OF AN ALTERNATE ACCEPTABLE MANUFACTURER OR FROM SYSTEM CONFIGURATIONS THAT ARE LEFT TO THE CHOICE OF THE CONTRACTOR SHALL BE INCLUDED IN THE T.C.'S BID. THIS BID SHALL INCLUDE INSTALLATION BY A LICENSED ELECTRICIAN.
5. UNLESS TRADE RULES DICTATE OTHERWISE.
6. FURNISHED AS PART OF THE EQUIPMENT WHEN POSSIBLE, OR FURNISHED TO THE E.C. FOR INSTALLATION IN THE FIELD.
7. INCLUDES ALL CONDUCTORS, GROUND BARS, AND TERMINATIONS FOR THE COMPLETE BONDING SYSTEM REQUIRED BY THE SPECIFICATIONS.
8. REFER TO ELECTRICAL DRAWINGS FOR LOCATIONS OF PANELS AND SWITCHBOARDS SHOWN IN THE TECHNOLOGY BONDING RISER DIAGRAM AND TYPICAL TELECOM ROOM BONDING FLOW DIAGRAM.

TELECOM ROOM REFERENCES

TELECOM ROOM	DETAIL / SHEET REFERENCE	FLOOR PLAN REFERENCE	ARCH ROOM NUMBER
IDF	4/T4.01	T2.00	ELEC 148
MDF	1/T4.01	T2.00	DATA 124

TECHNOLOGY SHEET INDEX

T0.00	TECHNOLOGY COVERSHEET
T0.10	TECHNOLOGY DIAGRAMS
T0.11	TECHNOLOGY DIAGRAMS
T0.12	TECHNOLOGY DIAGRAMS
T0.20	TECHNOLOGY SCHEDULES
T1.00	SITE PLAN - TECHNOLOGY
T2.00	FLOOR PLAN - VOICE/DATA
T2.10	FLOOR PLAN - AUDIO/VIDEO
T2.20	FLOOR PLAN - SECURITY
T4.01	TECHNOLOGY ENLARGED PLANS
GRAND TOTAL: 10	

TECHNOLOGY GENERAL NOTES:

1. ##-###-# INDICATES TECHNOLOGY EQUIPMENT SCHEDULE ITEM LABELED AS "EQUIPMENT LIST ABBREVIATION"
2. REFER TO TECHNOLOGY EQUIPMENT SCHEDULE AND SPECIFICATIONS FOR FULL DESCRIPTIONS AND MANUFACTURERS OF ALL DEVICES.

TECHNOLOGY MOUNTING SUBSCRIPT KEY:
- A MOUNT AT +6" TO CENTERLINE ABOVE COUNTER OR BACKSPLASH
- H MOUNT ORIENTED HORIZONTALLY
- L MOUNT IN CASEWORK
- M MOUNT IN MODULAR FURNITURE
- S MOUNT IN SURFACE RACEWAY

A SLASH IS USED BETWEEN TWO SUBSCRIPTS, E.G., A/H.

TECHNOLOGY INSTALLATION NOTES:

1. THE COMPLETE INSTALLATION SHALL BE IN ACCORDANCE WITH THE ADA STANDARDS FOR ACCESSIBLE DESIGN. REFER TO THE ADA GUIDELINES FOR ALL CONFIGURATION DETAILS ON THIS PAGE FOR ADDITIONAL INFORMATION.
2. CONCEAL ALL CONDUIT IN WALLS, PARTITIONS, ABOVE CEILING, IN FLOOR SLAB, ETC. UNLESS OTHERWISE INDICATED ON THE PLANS OR IN THE SPECIFICATIONS. CONDUIT IN MECHANICAL ROOMS AND STORAGE ROOMS WITHOUT CEILINGS MAY BE EXPOSED ON BUILDING STRUCTURE.
3. BOXES LOCATED ON OPPOSITE SIDES OF NON-RATED WALLS SHALL BE OFFSET A MINIMUM OF 6" HORIZONTALLY. BOXES ON OPPOSITE SIDES OF FIRE RATED WALLS SHALL BE OFFSET A MINIMUM OF 24" HORIZONTALLY. "THRU-THE-WALL" BOXES SHALL NOT BE ALLOWED WITHOUT PRIOR WRITTEN APPROVAL OF THE ARCHITECT/ENGINEER.
4. VERIFY ALL FURNITURE, MODULAR FURNITURE, AND EQUIPMENT LOCATIONS WITH ARCHITECTURAL PLANS, ELEVATIONS, AND REVIEWED SHOP DRAWINGS. PRIOR TO MAKING THE ACTUAL TELECOMMUNICATIONS INSTALLATION, ADJUST OUTLETS OR CONNECTION LOCATIONS TO ACCOMMODATE FURNITURE AND/OR EQUIPMENT.
5. TELECOMMUNICATIONS EQUIPMENT SHALL BE MOUNTED TO ALLOW ACCESS TO ELECTRICAL AND MECHANICAL EQUIPMENT. ALL MOUNTING OF TELECOMMUNICATION DEVICES ON EQUIPMENT SUPPLIED BY ANOTHER CONTRACTOR SHALL BE APPROVED IN ADVANCE BY THE OTHER CONTRACTOR.
6. CONTRACTOR SHALL BE RESPONSIBLE FOR ALL OPENINGS REQUIRED IN WALLS. ALL OPENINGS SHALL BE REPAIRED TO MATCH EXISTING BY A QUALIFIED CONTRACTOR AT THE EXPENSE OF THIS CONTRACTOR. ALL CONDUITS THROUGH WALLS SHALL BE GROUTED OR SEALED INTO OPENINGS.
7. ALL MATERIALS USED TO SEAL PENETRATIONS OF FIRE RATED WALLS AND FLOORS SHALL BE TESTED AND CERTIFIED AS A SYSTEM PER ASTM E814 STANDARDS FOR FIRE TESTS OF THROUGH-PENETRATION FIRESTOPS. REFER TO DIVISION 27 SPECIFICATIONS FOR ADDITIONAL INFORMATION AND REQUIREMENTS SPECIFIC TO FIRESTOPPING.
8. THE TECHNOLOGY CONTRACTOR IS RESPONSIBLE FOR REMOVAL AND REPLACEMENT OF THE CEILINGS, CEILING TILES, AND CEILING GRID ASSOCIATED WITH THE AREAS OF WORK BY ALL CONTRACTORS.
9. ALL LADDER RACK AND CABLE TRAY SIZES ARE AS DEFINED ON THE DRAWINGS. REFER TO DIVISION 27 SPECIFICATIONS FOR APPROVED MANUFACTURERS AND INSTALLATION REQUIREMENTS.
10. EACH CONTRACTOR IS RESPONSIBLE FOR DAMAGE CAUSED BY THEIR ACTIONS TO THE WALLS, FLOORS, CEILINGS, AND ROOFS. THE CONTRACTOR WHOSE WORK CAUSES DAMAGE IS RESPONSIBLE FOR PATCHING TO MATCH ORIGINAL CONSTRUCTION, FIRE RATING, AND FINISH.

TECHNOLOGY OUTSIDE PLANT NOTES

1. THE LOCATION OF THE CONDUIT, HAND HOLES AND/OR MAINTENANCE HOLES SHOWN ARE APPROXIMATE LOCATIONS. FIELD VERIFY THE LOCATION OF ALL UTILITIES PRIVATE AND/OR PUBLIC PRIOR TO THE INSTALLATION OF THE COMPONENT. FIELD COORDINATE THE FINAL LOCATION WITH THE OWNER AND ENGINEER PRIOR TO INSTALLATION.
2. POTHOLING TO LOCATE EXISTING UNDERGROUND UTILITIES, IF APPLICABLE, SHALL BE INCLUDED IN THE CONTRACTOR'S BID. CONTRACTOR IS RESPONSIBLE FOR FINAL PLACEMENT OF HAND HOLES AND/OR MAINTENANCE HOLES AND SHALL NOTIFY THE ENGINEER OF FINAL LOCATIONS PRIOR TO INSTALLATION.
3. HAND HOLES AND/OR MAINTENANCE HOLES SHALL BE CONSTRUCTED SO THAT THE TOP OF THE FRAME WILL BE FLUSH WITH THE GROUND LINE.
4. REMOVAL AND REPLACEMENT OF THE EXISTING UNDERGROUND UTILITIES THAT ARE REQUIRED TO COMPLETE THE INSTALLATION SHALL BE INCLUDED IN THE CONTRACTOR'S BID.
5. CONTRACTOR SHALL INCLUDE IN THEIR BID ANY REMOVAL AND REPLACEMENT OF EXISTING SIDEWALK, PAVEMENT, GRASS, SHRUBS, TREES, ETC. THAT WILL BE IMPACTED BY THE INSTALLATION OF THE NEW CONDUITS SHOWN ON THE DRAWINGS. IF TREES ARE REQUIRED TO BE REMOVED THE CONTRACTOR SHALL CONTACT THE OWNER AND DISCUSS OPTIONS PRIOR TO CUTTING DOWN ANY TREE OR SHRUB OVER 5' IN HEIGHT.
6. NO ADDITIONAL COST SHALL BE APPROVED FOR PLACING CONDUITS DEEPER THAN REQUIRED MINIMUM DEPTH TO AVOID EXISTING UNDERGROUND UTILITIES.
7. PROVIDE A MINIMUM OF 25'-0" SLACK LOOP WITHIN EACH HAND HOLES AND/OR MAINTENANCE HOLES. SLACK LOOP SHALL BE SECURE SO OR FIBER IS NOT RESTING ON EARTH AFTER FINAL INSTALLATION.

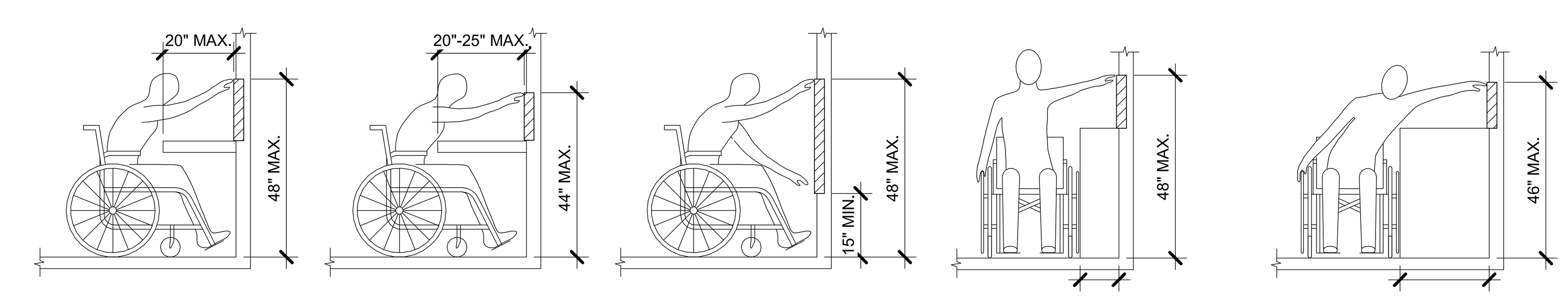

INSTALL ABOVE COUNTER DEVICE AT 44" ABOVE FINISHED FLOOR.

INSTALL ABOVE COUNTER DEVICE AT 40" ABOVE FINISHED FLOOR.

INSTALL DEVICE AT 18" ABOVE FINISHED FLOOR.

ADA GUIDELINES - FRONT ACCESS

INSTALL DEVICE AT 44" ABOVE FINISHED FLOOR.

INSTALL DEVICE AT 42" ABOVE FINISHED FLOOR.

ADA GUIDELINES - SIDE ACCESS

ADA STANDARDS FOR ACCESSIBLE DESIGN

tsk
314 South Water Street,
Suite 100
Henderson, NV 89015
phone: 702.456.3000
fax: 702.898.6209
www.tska.com

PROFESSIONAL ENGINEER - STATE OF NEVADA
VENKATESH THUMALA JANAKIRAMAN
Exp: 06/30/2025
ELECTRICAL
No. 030510
01/03/2024

THESE DRAWINGS AND SPECIFICATIONS ARE THE PROPERTY OF TATE SNYDER KIMSEY ARCHITECTS AND MAY NOT BE REPRODUCED OR USED FOR ANY PURPOSE WITHOUT THE ARCHITECTS WRITTEN CONSENT.
AS INSTRUMENTS OF SERVICE, THESE DOCUMENTS ARE NOT FINAL AND READY FOR USE, AND THEREFORE NOT VALID, UNLESS THEY ARE SEALED, SIGNED AND DATED.

Consultant

IMEG
4599 LONGLEY LANE
RENO, NV 89502
P: 775.828.4889
PROJECT #22007707.00
www.imegcorp.com

IMEG CORP. RESERVES PROPRIETARY RIGHTS, INCLUDING COPYRIGHTS, TO THIS DRAWING AND THE DATA SHOWN THEREON. SAID DRAWING AND/OR DATA ARE THE EXCLUSIVE PROPERTY OF IMEG CORP. AND SHALL NOT BE USED OR REPRODUCED FOR ANY OTHER PROJECT WITHOUT THE EXPRESS WRITTEN APPROVAL AND PARTICIPATION OF IMEG CORP. ©2022 IMEG CORP.

0 1 2 3
REF. SCALE IN INCHES
PROJECT #22007707.00

PLEASE RECYCLE

Project

SPARKS FIRE STATION #6

6963 WINGFIELD HILLS ROAD, SPARKS, NV 89436

Job No: 22-043

Owner

CITY OF SPARKS

BID SET

REVISIONS		
REV	DATE	DESCRIPTION

Sheet Title

TECHNOLOGY COVERSHEET

Date: 01/04/2024

Sheet No:

T0.00

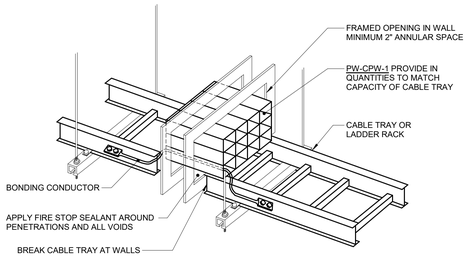

1 FIRE RATED CABLE PATHWAY DETAIL

NO SCALE

NOTES:

1. REFER TO SPECIFICATION SECTION 27 05 03 THROUGH PENETRATION FIRESTOPPING FOR ADDITIONAL INFORMATION.
2. REFER TO SPECIFICATIONS FOR LADDER RACK AND CABLE TRAY INFORMATION. LADDER TYPE CABLE TRAY IS ONLY SHOWN FOR CLARITY OF ILLUSTRATION.
3. PROVIDE GROUNDING LUGS WITH PW-CPW-1 AND BOND TO GROUND PER MANUFACTURERS INSTRUCTIONS.
4. PROVIDE #6 AWG GREEN COPPER GROUND WIRE BETWEEN SECTIONS OF CABLE TRAY TO MAINTAIN CONTINUOUS GROUND. ATTACH TO CABLE TRAY WITH MANUFACTURER APPROVED GROUNDING CLAMPS OR LUGS.

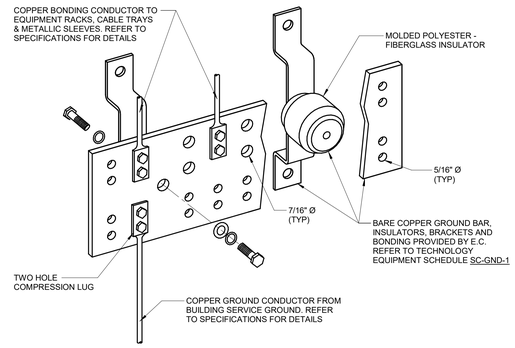

2 BONDING BUS BAR DETAIL

NO SCALE

NOTES:

1. REFER TO TECHNOLOGY EQUIPMENT SCHEDULE SC-GND-1 FOR WIDTH REQUIREMENTS.
2. REFER TO TYPICAL TELECOM ROOM BONDING FLOW DIAGRAM.

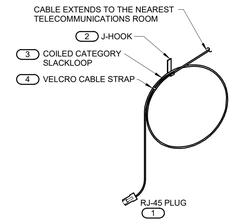

3 ABOVE CEILING INFORMATION OUTLET MOUNTING DETAIL

NO SCALE

NOTES:

1. THIS DIAGRAM MAY NOT REPRESENT THE QUANTITY OF CABLES TO EACH INFORMATION OUTLET JUNCTION BOX. REFER TO THE DRAWINGS AND THE INFORMATION OUTLET SCHEDULE FOR ADDITIONAL INFORMATION.
2. ALL DEVICES ARE INSTALLED ABOVE THE CEILING UNLESS OTHERWISE NOTED.

(#)

KEYNOTES:

1. 1 OR 2-PORT PLENUM RATED SURFACE MOUNTED BOX. SUPPORT FROM J-HOOK.]TERMINATE CABLE ON FIELD TERMINABLE MODULAR RJ-45 PLUG. REFER TO THE INFORMATION OUTLET SCHEDULE AND TECHNOLOGY EQUIPMENT SCHEDULE FOR ADDITIONAL INFORMATION.
2. MOUNT A DEDICATED J-HOOK TO THE NEAREST CEILING SUBSTRUCTURE, COLUMN, JOIST, OR WALL ABOVE THE CEILING AS SHOWN ON THE DRAWINGS. PROVIDE THE PROPER SUPPORT WHEN HANGING FROM THE CEILING SUBSTRUCTURE OR COLUMN WALL OR JOIST. REFER TO SPECIFICATION SECTION 27 05 28 FOR ADDITIONAL REQUIREMENTS.
3. REFER TO SECTION 27 15 00 FOR SLACKLOOP LENGTH. MAINTAIN THE MANUFACTURERS BEND RADIUS FOR SLACKLOOP SIZE.
4. PROVIDE AND INSTALL A VELCRO CABLE STRAP ON THE SLACKLOOP APPROXIMATELY EVERY 6" ALONG THE SLACKLOOP. FOR SLACKLOOPS GREATER THAN 3' A MINIMUM OF (4) STRAPS WILL BE INSTALLED.

4 TECHNOLOGY ROUGH-IN TO J-HOOK DETAIL

NO SCALE

NOTES:

1. THE INTENT OF THE DETAIL IS TO ALIGN AND GROUP DEVICE ROUGH-INS FOR POWER AND LOW VOLTAGE TECHNOLOGY SYSTEMS. SOLIDLY MOUNTED AND THE SURFACE OF THE TRIM IS EITHER FLUSH WITH THE WALL SURFACE OR WITHIN 1/8" OF THE WALL SURFACE. JUNCTION BOXES LARGER THAN 4" SQUARE SHALL BE MOUNTED IN A MANNER THAT IS SIMILAR TO THE SYSTEM NOTED ABOVE OR ACHIEVES THE SAME RESULTS.
2. PLASTER RINGS DEPTH SHALL BE 1/8" DEEPER THAN THE GYP BOARD APPLIED TO THE WALL. PLASTER RING SHALL BE 3/4" FOR USE WITH 5/8" GYP BOARD.
3. METAL STUD-TO-STUD MOUNTING BRACKETS FOR MULTIPLE BOXES BETWEEN STUD. ERICO CADDY RBS## SERIES, EATON B-LINE BB SERIES, OR EQUAL.
4. MOUNTING SUPPORT BRACKETS SIZES FOR SINGLE BOXES IN A STUD CAVITY SHALL MATCH THE STUD DEPTH. ERICO CADDY H## SERIES, EATON B-LINE BB## SERIES, OR EQUAL.
5. WHERE RECEPTACLE AND TECHNOLOGY DEVICES ARE SHOWN SERVING A COMMON COMPUTER OR EQUIPMENT, OR SHOWN IN SIMILAR LOCATIONS ON THE DRAWINGS THE DEVICES SHALL BE INSTALLED IN THE SAME STUD CAVITY WITH MOUNTING BRACKETS OR ALIGNED ON OPPOSITE SIDES OF A COMMON STUD WITH SEPARATE SUPPORT.
6. TERMINATE CONDUIT STUB ORIENTED HORIZONTALLY AT THE HEIGHT OF THE ASSOCIATED CABLE TRAY OR J-HOOK ROUTE. CONDUIT RUN SHALL NOT CONTAIN MORE THAN 180 DEGREES OF BEND BETWEEN ACCESSIBLE JUNCTION BOXES OR BETWEEN JUNCTION BOX AND END OF CONDUIT.
7. WHERE CONDUIT STUB IS LOCATED IN A ROOM WITH AN ACCESSIBLE CEILING AND IS NOT REQUIRED TO RUN TO CABLE ROUTE LOCATED OUTSIDE THE ROOM, STUB MUST TERMINATE ABOVE THE ACCESSIBLE CEILING WITH A 90-DEGREE BEND AT THE TOP ORIENTED IN TO THE ROOM AT THE HEIGHT OF THE ASSOCIATED CABLE TRAY OR J-HOOK ROUTE IN THE ROOM.
8. ALL STUBS MUST BE FITTED WITH A NYLON BUSHING ON EACH END OF THE CONDUIT.
9. INSTALLING CONTRACTOR SHALL FURNISH AND INSTALL FIRESTOP MATERIALS FOR TECHNOLOGY ROUGH-INS PER PROJECT REQUIREMENTS. REFER TO SPECIFICATIONS FOR FIRESTOP REQUIREMENTS.

KEYNOTES: (#)

1. MOUNT A DEDICATED J-HOOK TO THE NEAREST CEILING SUBSTRUCTURE, COLUMN, JOIST, OR WALL ABOVE THE CEILING AS SHOWN ON THE DRAWINGS. PROVIDE THE PROPER SUPPORT WHEN HANGING FROM THE CEILING SUBSTRUCTURE OR COLUMN WALL OR JOIST. REFER TO SPECIFICATION SECTION 27 05 28 FOR ADDITIONAL REQUIREMENTS.
2. REFER TO SECTION 27 15 00 FOR SLACKLOOP LENGTH. MAINTAIN THE MANUFACTURERS BEND RADIUS FOR SLACKLOOP SIZE.
3. PROVIDE AND INSTALL A VELCRO CABLE STRAP ON THE SLACKLOOP APPROXIMATELY EVERY 6" ALONG THE SLACKLOOP. FOR SLACKLOOPS GREATER THAN 3' A MINIMUM OF (4) STRAPS WILL BE INSTALLED.

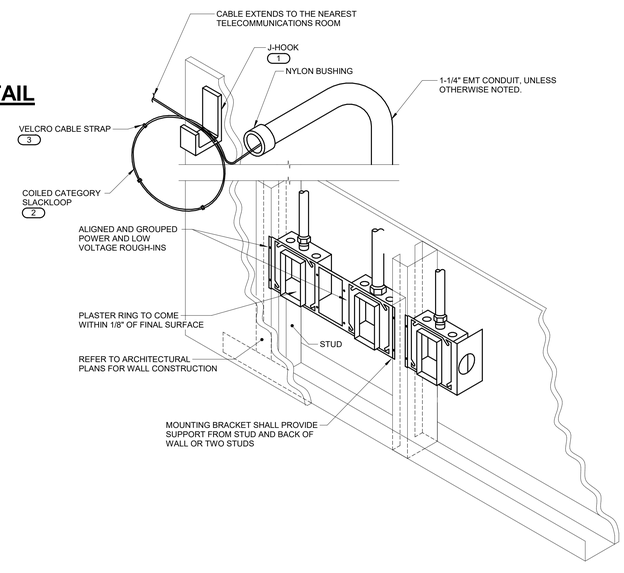

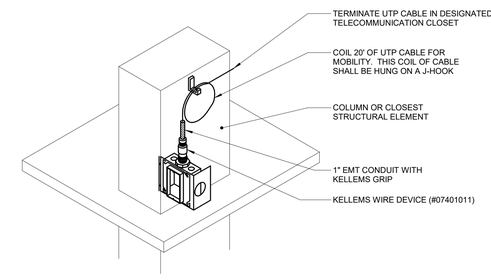

5 TECHNOLOGY WIRELESS ROUGH-IN MOUNTING DETAIL

NO SCALE

NOTES:

1. TERMINATE DATA CABLE TO ONE PORT BISCUIT BOX INSIDE J-BOX.
2. PROVIDE 6' PATCH CORD FOR CONNECTION TO OWNER PROVIDED WIRELESS ACCESS POINT.
3. INSTALL WIRELESS ACCESS POINT PER MANUFACTURER RECOMMENDED ORIENTATION.

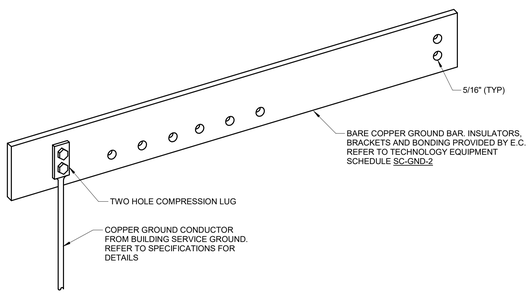

6 RACK MOUNT BONDING BUS BAR DETAIL

NO SCALE

1. REFER TO TECHNOLOGY EQUIPMENT SCHEDULE SC-GND-2 FOR WIDTH REQUIREMENTS.

tsk

314 South Water Street,
Suite 100
Henderson, NV 89015
phone: 702.456.3000
fax: 702.898.6209
www.tska.com

THESE DRAWINGS AND SPECIFICATIONS ARE THE PROPERTY OF TATE SNYDER KIMSEY ARCHITECTS AND MAY NOT BE REPRODUCED OR USED FOR ANY PURPOSE WITHOUT THE ARCHITECTS WRITTEN CONSENT. AS INSTRUMENTS OF SERVICE, THESE DOCUMENTS ARE NOT FINAL AND READY FOR USE, AND THEREFORE NOT VALID, UNLESS THEY ARE SEALED, SIGNED AND DATED.

Consultant

IMEG
www.imegcorp.com
4599 LONGLEY LANE
RENO, NV 89502
P: 775.826.4899
PROJECT #22007707.00

IMEG CORP. RESERVES PROPRIETARY RIGHTS, INCLUDING COPYRIGHTS, TO THIS DRAWING AND THE DATA SHOWN THEREON. SAID DRAWING AND/OR DATA ARE THE EXCLUSIVE PROPERTY OF IMEG CORP. AND SHALL NOT BE USED OR REPRODUCED FOR ANY OTHER PROJECT WITHOUT THE EXPRESS WRITTEN APPROVAL AND PARTICIPATION OF IMEG CORP. ©2022 IMEG CORP.

0 1 2 3
REF. SCALE IN INCHES PROJECT #22007707.00

PLEASE RECYCLE

Project

SPARKS FIRE STATION #6

6963 WINGFIELD HILLS ROAD, SPARKS, NV 89436

Job No: 22-043

Owner

CITY OF SPARKS

BID SET

REVISIONS

REV	DATE	DESCRIPTION

Sheet Title

TECHNOLOGY DIAGRAMS

Date: 01/04/2024

Sheet No:

T0.10

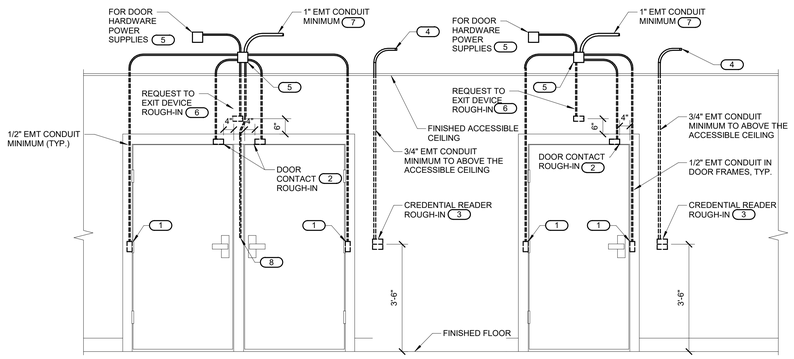

DOOR FRAME ROUGH-IN DIAGRAM
(ALL DOUBLE DOORS WITH OR WITHOUT MULLION)

DOOR FRAME ROUGH-IN DIAGRAM
(ALL SINGLE DOORS)

1 CONTROLLED SECURITY SCHEME DOOR ROUGH-IN DETAIL

NO SCALE

NOTES:

1. CONFIGURATIONS SHOWN IN THE DETAIL ABOVE ARE DIAGRAMMATIC, INTENDED TO DESCRIBE THE CONTROLLED SECURITY SCHEME ROUGH-IN REQUIREMENTS OF THE DOORS. DETAILS ABOVE MAY NOT ACCURATELY REPRESENT DOOR SIZE, DOOR SWING, DOOR HARDWARE, OR DOOR FUNCTIONALITY. REFER TO ARCHITECTURAL DOOR HARDWARE SCHEDULE, DOOR HARDWARE GROUPS AND DOOR HARDWARE SPECIFICATIONS FOR COMPLETE INFORMATION. MIRROR THE DETAIL AS REQUIRED.
2. ROUGH IN SHOWN IN THE DETAIL ABOVE REPRESENTS THE MINIMUM REQUIREMENTS FOR ALL CONTROLLED SECURITY SYSTEM DEVICES AND CABLING UNLESS OTHERWISE NOTED. COORDINATE EXACT REQUIREMENTS WITH SELECTED DOOR MATERIALS, DOOR HARDWARE, AND CONTROLLED SECURITY DEVICES AND CABLING PRIOR TO INSTALLATION.
3. ALL CABLING IN WALLS AND WHERE EXPOSED ON VERTICAL SURFACES SHALL BE INSTALLED IN EMT CONDUIT OR SURFACE MOUNT RACEWAY. CABLING ROUTED HORIZONTALLY ABOVE THE ACCESSIBLE CEILING MAY BE INSTALLED FREE-AIR CABLING PROPERLY RATED FOR THE CEILING ENVIRONMENT.
4. THE ELECTRICAL OR SECURITY CONTRACTOR SHALL NOT MODIFY ANY FIRE RATED DOOR AND/OR DOOR FRAME. REFER TO THE ARCHITECTURAL DOOR SCHEDULE, DOOR HARDWARE SCHEDULE, AND DOOR HARDWARE SPECIFICATION FOR ADDITIONAL INFORMATION. MODIFICATION TO ANY FIRE RATED DOOR AND/OR FRAME WILL REQUIRE A RE-CERTIFICATION OF THE DOOR AND FRAME WITH THE LOCAL AUTHORITY HAVING JURISDICTION (AHJ).
5. INSTALLING CONTRACTOR SHALL FURNISH AND INSTALL FIRESTOP MATERIALS FOR ALL CONTROLLED SECURITY SCHEME ROUGH-INS PER PROJECT REQUIREMENTS. REFER TO SPECIFICATIONS FOR ADDITIONAL INFORMATION AND REQUIREMENTS.
6. REFER TO THE CONTROLLED SECURITY SCHEME WIRING DIAGRAM FOR CABLING REQUIREMENTS AND THE CONTROLLED SECURITY SCHEME SCHEDULE FOR ADDITIONAL INFORMATION.
7. INSTALLATION SHALL INCLUDE ALL POWER REQUIRED FOR SYSTEM OPERATION INCLUDING +120VAC. REFER TO THE SUGGESTED MATRIX OF SCOPE RESPONSIBILITY FOR ADDITIONAL INFORMATION.

KEYNOTES:

1. PROVIDE JUNCTION BOXES IN THE DOOR FRAME WHERE SHOWN ON THIS DETAIL. ROUGH-IN SHALL BE PROVIDED WHETHER THE CURRENT SECURITY SCHEME UTILIZES THEM OR NOT. ALL CONDUITS SHALL BE EMT CONDUIT UNLESS OTHERWISE NOTED. FLEXIBLE CONDUIT OF ANY TYPE WILL NOT BE ACCEPTED. COORDINATE INSTALLATION WITH ON-SITE DOOR FRAME INSTALLATION CONTRACTOR.
2. ALL DOOR POSITION SWITCHES ARE REQUIRED TO BE RECESSED UNLESS OTHERWISE NOTED. ELECTRIC HINGE MONITORS ARE NOT AN ACCEPTABLE REPLACEMENT FOR THE RECESSED DOOR POSITION SWITCH.
3. 4" SQUARE BACKBOX WITH SINGLE GANG PLASTER RING. PROVIDE 2 1/2" DEEP MASONRY BOX WHERE APPLICABLE. REFER TO FLOOR PLAN(S) FOR ACTUAL CREDENTIAL READER TYPE AND ROUGH-IN LOCATIONS.
4. CONDUIT SHALL ROUTE FROM THE CREDENTIAL READER TO THE SECURE SIDE OF THE DOOR. CONDUIT SHALL ROUTE TO NEAREST CABLE TRAY OR ABOVE ACCESSIBLE CEILING. PROVIDE A NYLON BUSHING ON CONDUIT END.
5. MOUNT A MINIMUM 4" SQUARE 2-1/8" DEEP JUNCTION BOX WITH BLANK COVER PLATE ON THE SECURE SIDE OF THE DOOR ABOVE ACCESSIBLE CEILING. INSTALLING CONTRACTOR SHALL SIZE THE JUNCTION BOXES PER SYSTEM INSTALLATION REQUIREMENTS AND APPLICABLE CODES. MAINTAIN ACCESS TO THE JUNCTION BOX.
6. PROVIDE A HORIZONTALLY MOUNTED SINGLE GANG BACKBOX FOR THE REQUEST TO EXIT SENSOR. REFER TO THE CONTROLLED SECURITY SCHEME SCHEDULE ON FOR DOORS THAT REQUIRE THIS ROUGH-IN.
7. CONDUIT SHALL ROUTE TO NEAREST CABLE TRAY OR ABOVE ACCESSIBLE CEILING. PROVIDE A NYLON BUSHING ON CONDUIT END.
8. CONDUIT INSTALLED IN PERMANENT MULLIONS ONLY. REFER TO THE ARCHITECTURAL DOOR SCHEDULE AND DOOR HARDWARE GROUPS FOR LOCATIONS THAT REQUIRE THIS ROUGH-IN. PROVIDE A NYLON BUSHING ON THE CONDUIT END.

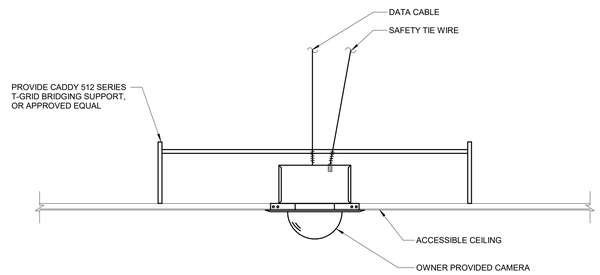

2 ACCESSIBLE CEILING CAMERA MOUNT AND ROUGH-IN DETAIL

NO SCALE

NOTES:

1. COORDINATE EXACT LOCATION ON SITE WITH WORK BY OTHER TRADES TO ENSURE DESIRED VIEWING AREA AND SERVICE ACCESS AFTER COMPLETION OF PROJECT AND TO MINIMIZE ANY POSSIBLE DAMAGE TO INSTALLED CAMERA OR ASSOCIATED CABLING.
2. INSTALL OWNER PROVIDED CAMERA MOUNTING ACCESSORIES REQUIRED FOR A COMPLETE INSTALLATION.

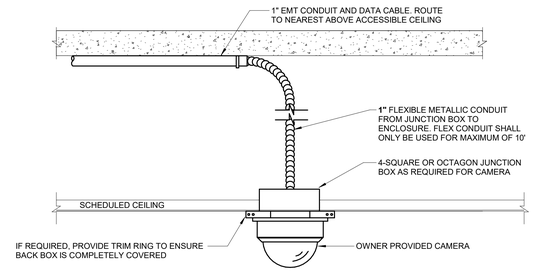

3 INACCESSIBLE CEILING CAMERA MOUNT AND ROUGH-IN DETAIL

NO SCALE

NOTES:

1. COORDINATE EXACT LOCATION ON SITE WITH WORK BY OTHER TRADES TO ENSURE DESIRED VIEWING AREA AND SERVICE ACCESS AFTER COMPLETION OF PROJECT AND TO MINIMIZE ANY POSSIBLE DAMAGE TO INSTALLED CAMERA OR ASSOCIATED CABLING.
2. INSTALLING CONTRACTOR SHALL FURNISH AND INSTALL FIRESTOP MATERIALS FOR CAMERA ROUGH-INS PER PROJECT REQUIREMENTS. REFER TO SPECIFICATIONS FOR FIRESTOP REQUIREMENTS.
3. INSTALL OWNER PROVIDED CAMERA MOUNTING ACCESSORIES REQUIRED FOR A COMPLETE INSTALLATION.

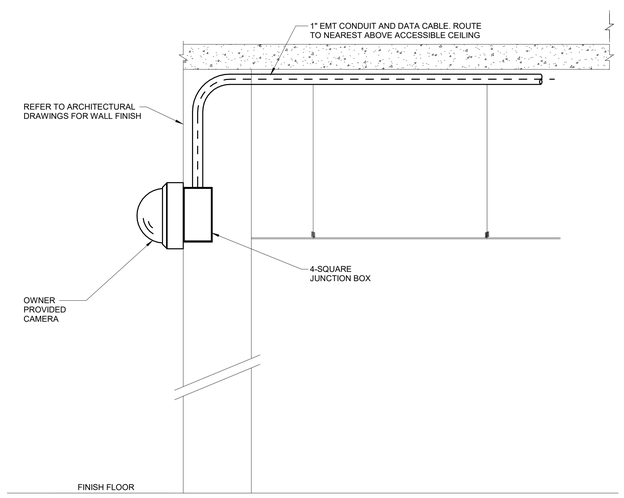

4 INTERIOR WALL CAMERA MOUNT AND ROUGH-IN DETAIL

NO SCALE

NOTES:

1. COORDINATE EXACT LOCATION ON SITE WITH WORK BY OTHER TRADES TO ENSURE DESIRED VIEWING AREA AND SERVICE ACCESS AFTER COMPLETION OF PROJECT AND TO MINIMIZE ANY POSSIBLE DAMAGE TO INSTALLED CAMERA OR ASSOCIATED CABLING.
2. INSTALLING CONTRACTOR SHALL FURNISH AND INSTALL FIRESTOP MATERIALS FOR CAMERA ROUGH-INS PER PROJECT REQUIREMENTS. REFER TO SPECIFICATIONS FOR FIRESTOP REQUIREMENTS.
3. INSTALL OWNER PROVIDED CAMERA MOUNTING ACCESSORIES REQUIRED FOR A COMPLETE INSTALLATION.

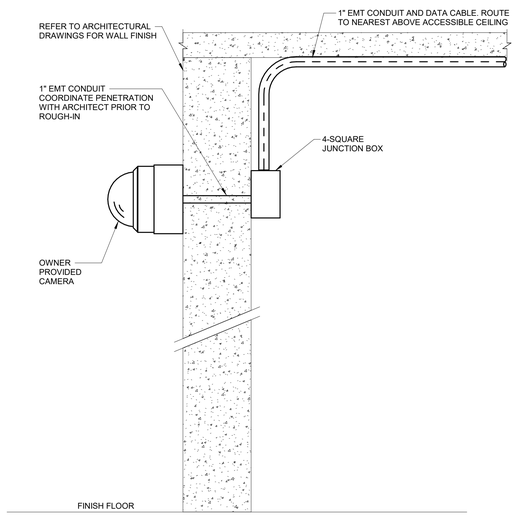

5 VERTICAL SURFACE MOUNT CAMERA MOUNT AND ROUGH-IN DETAIL

NO SCALE

NOTES:

1. COORDINATE EXACT LOCATION ON SITE WITH WORK BY OTHER TRADES TO ENSURE DESIRED VIEWING AREA AND SERVICE ACCESS AFTER COMPLETION OF PROJECT AND TO MINIMIZE ANY POSSIBLE DAMAGE TO INSTALLED CAMERA OR ASSOCIATED CABLING.
2. INSTALLING CONTRACTOR SHALL FURNISH AND INSTALL FIRESTOP MATERIALS FOR CAMERA ROUGH-INS PER PROJECT REQUIREMENTS. REFER TO SPECIFICATIONS FOR FIRESTOP REQUIREMENTS.
3. INSTALL OWNER PROVIDED CAMERA MOUNTING ACCESSORIES REQUIRED FOR A COMPLETE INSTALLATION.
4. SEAL WALL MOUNT BASE PLATE TO FACADE TO PREVENT WATER INFILTRATION.

tsk

314 South Water Street,
Suite 100
Henderson, NV 89015
phone: 702.456.3000
fax: 702.898.6209
www.tska.com

PROFESSIONAL ENGINEER — VENKATESH THUMALA JANARDHANAN — Exp: 06/30/2025 — ELECTRICAL — No. 030510 — STATE OF NEVADA
01/03/2024

THESE DRAWINGS AND SPECIFICATIONS ARE THE PROPERTY OF TATE SNYDER KIMSEY ARCHITECTS AND MAY NOT BE REPRODUCED OR USED FOR ANY PURPOSE WITHOUT THE ARCHITECTS WRITTEN CONSENT. AS INSTRUMENTS OF SERVICE, THESE DOCUMENTS ARE NOT FINAL AND READY FOR USE, AND THEREFORE NOT VALID, UNLESS THEY ARE SEALED, SIGNED AND DATED.

Consultant

IMEG
www.imegcorp.com
4599 LONGLEY LANE
RENO, NV 89502
P: 775.826.4899
PROJECT #22007707.00

IMEG CORP. RESERVES PROPRIETARY RIGHTS, INCLUDING COPYRIGHTS, TO THIS DRAWING AND THE DATA SHOWN THEREON. SAID DRAWING AND/OR DATA ARE THE EXCLUSIVE PROPERTY OF IMEG CORP. AND SHALL NOT BE USED OR REPRODUCED FOR ANY OTHER PROJECT WITHOUT THE EXPRESS WRITTEN APPROVAL AND PARTICIPATION OF IMEG CORP. ©2022 IMEG CORP.

0 1 2 3
REF. SCALE IN INCHES PROJECT #22007707.00

PLEASE RECYCLE

Project

SPARKS FIRE STATION #6

6963 WINGFIELD HILLS ROAD, SPARKS, NV 89436

Job No: 22-043

Owner

CITY OF SPARKS

BID SET

REVISIONS		
REV	DATE	DESCRIPTION

Sheet Title

TECHNOLOGY DIAGRAMS

Date: 01/04/2024

Sheet No:

T0.11

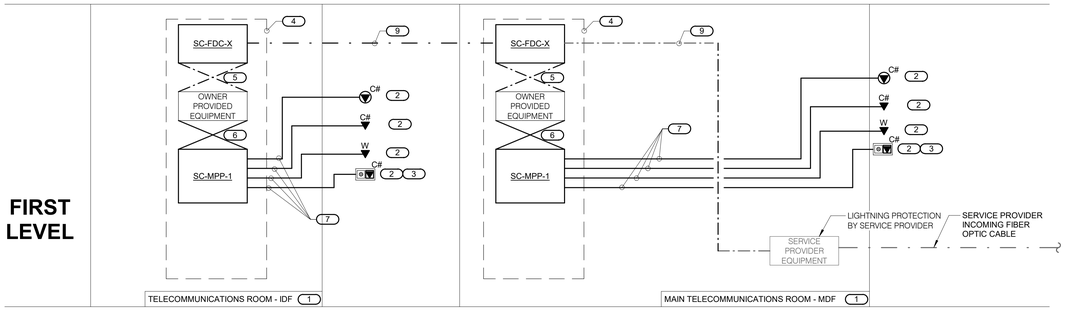

1 FIBER AND COPPER RISER DIAGRAM

NO SCALE

NOTES:

1. THIS RISER IS DIAGRAMMATIC AND MAY NOT SHOW ACTUAL ROUTING OR QUANTITIES OF MATERIALS SHOWN. THIS RISER IS SHOWN FOR CLARIFICATION OF CONNECTION(S), LOCATIONS AND CABLE TYPE. ALL INFORMATION OUTLETS ARE TYPICAL OF THE OUTLETS IN THE AREA SHOWN. REFER TO FLOOR PLANS FOR MORE SPECIFIC ROUTING INFORMATION. REFER TO SPECIFICATIONS FOR ADDITIONAL REQUIREMENTS.
2. REFER TO FLOOR PLANS FOR QUANTITY OF CABLES AND JACKS TO BE INSTALLED AT EACH INFORMATION OUTLET.

KEYNOTES: (#)

1. REFER TO COVERPAGE AND FLOOR PLANS FOR TELECOMMUNICATIONS ROOM LOCATIONS.
2. C# INDICATES VOICE/DATA FACEPLATE CONFIGURATION. REFER TO SPECIFICATIONS SECTION 27 15 00 FOR ADDITIONAL INFORMATION.
3. INFORMATION OUTLET INSTALLED IN E.C. PROVIDED AND INSTALLED FLOOR BOX.
4. RACK OR CABINET AS DEFINED ON THE TELECOM ROOM LAYOUT.
5. REFER TO SPECIFICATIONS FOR FIBER PATCH CORD REQUIREMENTS.
6. RJ-45 TO RJ45 CATEGORY 6 UTP PATCH CORDS, REFER TO SPECIFIATIONS.
7. 4-PAIR, CATEGORY 6, UNSHIELDED TWISTED PAIR CABLE, REFER TO SPECIFICATIONS.
8. REFER TO SPECIFICATIONS FOR COPPER PATCH CORD REQUIREMENTS.
9. 24-STRAND SM FIBER OPTIC CABLE, CORNING #024E8F-31131-29.

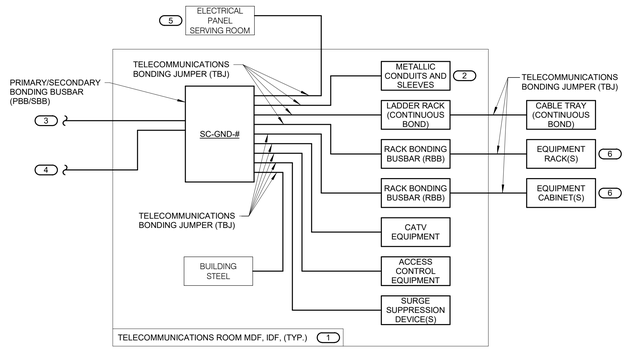

2 TYPICAL TELECOM ROOM BONDING FLOW DIAGRAM

NO SCALE

NOTES:

1. THIS FLOW DIAGRAM IS DIAGRAMMATIC AND MAY NOT SHOW ACTUAL ROUTING OR QUANTITIES OF MATERIALS. THIS FLOW DIAGRAM IS SHOWN FOR CLARIFICATION OF CONNECTION LOCATIONS AND CONDUCTOR TYPE. ALL CONNECTIONS AND SYSTEM DEVICES SHOWN ARE TYPICAL AND NOT REPRESENTATIVE OF ACTUAL PROJECT QUANTITIES. REFER TO FLOOR PLANS AND ENLARGED FLOOR PLANS FOR ACTUAL QUANTITIES AND LOCATIONS OF DEVICES AND SPECIFIC ROUTING INFORMATION. REFER TO SPECIFICATIONS FOR ADDITIONAL REQUIREMENTS.
2. ALL CONDUCTORS IN THE TECHNOLOGY BONDING SYSTEM SHALL BE [PLENUM RATED] COPPER (GREEN OR MARKED WITH A DISTINCTIVE GREEN COLOR). REFER TO BONDING CONDUCTOR SIZING SCHEDULE FOR SIZING CRITERIA FOR CONDUCTORS. REFER TO SPECIFICATIONS FOR ADDITIONAL REQUIREMENTS.
3. ALL BONDING CONDUCTORS AND BONDING JUMPERS SHALL BE CONNECTED BY COMPRESSION LUGS, EXOTHERMIC WELDING, OR IRREVERSIBLE COMPRESSION CONNECTORS. SOLDER IS NOT AN ACCEPTABLE MEANS OF CONNECTION. SHEET METAL SCREWS SHALL NOT BE USED TO CONNECT COMMUNICATIONS BONDING CONDUCTORS TO EQUIPMENT. WHERE NECESSARY, REMOVE PAINT AND/OR USE PAINT-PIERCING WASHERS TO PROVIDE PROPER ELECTRICAL BOND AT ALL CONNECTIONS.

KEYNOTES:

1. REFER TO TELECOM ROOM REFERENCES SCHEDULE FOR TELECOMMUNICATIONS ROOM NUMBER AND LOCATION INFORMATION.
2. INCLUDES HORIZONTAL AND VERTICAL CONDUIT SLEEVES FOR TECHNOLOGY CABLING.
3. TELECOMMUNICATIONS BONDING BACKBONE (TBB). REFER TO TELECOMMUNICATIONS BONDING RISER DIAGRAM.
4. TELECOMMUNICATIONS BONDING CONDUCTOR (TBC), TO ELECTRICAL ENTRANCE INTERSYSTEM BONDING TERMINATION. REFER TO TELECOMMUNICATIONS BONDING RISER DIAGRAM FOR CONTINUATION AND ADDITIONAL INFORMATION AND REQUIREMENTS. [THIS CONNECTION OCCURS IN MDF ONLY.]
5. REFER TO THE ELECTRICAL DRAWINGS FOR LOCATION.
6. PROVIDE SC-GND-2 RACK MOUNT TELECOMMUNICATIONS BONDING BUSBAR AT EACH EQUIPMENT RACK.

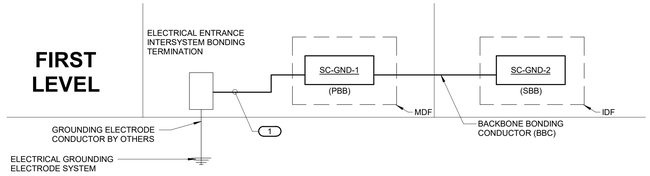

3 TECHNOLOGY BONDING RISER DIAGRAM

NO SCALE

NOTES:

1. THIS RISER IS DIAGRAMMATIC AND MAY NOT SHOW ACTUAL ROUTING OR QUANTITIES OF MATERIALS. THIS RISER IS SHOWN FOR CLARIFICATION OF CONNECTION LOCATIONS AND CONDUCTOR TYPE. ALL CONNECTIONS AND SYSTEM DEVICES SHOWN ARE TYPICAL AND NOT REPRESENTATIVE OF ACTUAL PROJECT QUANTITIES. REFER TO FLOOR PLANS AND ENLARGED FLOOR PLANS FOR ACTUAL QUANTITIES AND LOCATIONS OF DEVICES AND MORE SPECIFIC ROUTING INFORMATION. REFER TO SPECIFICATIONS FOR ADDITIONAL REQUIREMENTS.
2. TELECOM BONDING BACKBONE SHALL BE PROVIDED PER BONDING CONDUCTOR SIZING SCHEDULE.
3. ALL CONDUCTORS IN THE TECHNOLOGY BONDING SYSTEM SHALL BE [PLENUM RATED] COPPER (GREEN OR MARKED WITH A DISTINCTIVE GREEN COLOR). REFER TO BONDING CONDUCTOR SIZING SCHEDULE FOR SIZING CRITERIA FOR CONDUCTORS. REFER TO SPECIFICATIONS FOR ADDITIONAL REQUIREMENTS.
4. ALL BONDING CONDUCTORS AND BONDING JUMPERS SHALL BE CONNECTED BY COMPRESSION LUGS, EXOTHERMIC WELDING, OR IRREVERSIBLE COMPRESSION CONNECTORS. SOLDER IS NOT AN ACCEPTABLE MEANS OF CONNECTION. SHEET METAL SCREWS SHALL NOT BE USED TO CONNECT COMMUNICATIONS BONDING CONDUCTORS TO EQUIPMENT. WHERE NECESSARY, REMOVE PAINT AND/OR USE PAINT-PIERCING WASHERS TO PROVIDE PROPER ELECTRICAL BOND AT ALL CONNECTIONS.
5. SC-GND-1 IS THE PRIMARY BONDING BUSBAR (PBB) WHICH CONNECTS TO THE (TBC) AND CONNECTS ALL SECONDARY BONDING BUSBAR (SBB) VIA THE (BBC).
6. REFER TO FOR TYPICAL TELECOM ROOM BONDING FLOW DIAGRAM.
7. REFER TO TELECOM ROOM REFERENCES SCHEDULE FOR TELECOMMUNICATIONS ROOM NUMBER AND LOCATION INFORMATION.

KEYNOTES:

1. TELECOMMUNICATIONS BONDING CONDUCTOR (TBC). TBC SHALL BE THE SAME SIZE AS THE TBB OR LARGER. REFER TO BONDING CONDUCTOR SIZING SCHEDULE FOR SIZING REQUIREMENTS. **---[THIS CONNECTION OCCURS IN MC-1 ONLY.]---**

BONDING CONDUCTOR SIZING SCHEDULE

CONDUCTOR LENGTH IN FEET	MINIMUM ACCEPTABLE SIZE - AWG
LESS THAN 13'	6
14' - 20'	4
21' - 26'	3
27' - 33'	2
34' - 41'	1
42' - 52'	1/0
53' - 66'	2/0
67' - 84'	3/0
85' 105'	4/0
106' - 125'	250 kcmil
126' - 150'	300 kcmil
151' - 175'	350 kcmil
176' - 250'	500 kcmil
251' - 300'	600 kcmil
GREATER THAN 301'	750 kcmil

tsk
314 South Water Street,
Suite 100
Henderson, NV 89015
phone: 702.456.3000
fax: 702.898.6209
www.tska.com

LICENSED PROFESSIONAL ENGINEER — STATE OF NEVADA — KOMATSU TSUNAKA JANKRAMAN — Exp: 06/30/2025 — ELECTRICAL — No. 030510 — 01/03/2024

THESE DRAWINGS AND SPECIFICATIONS ARE THE PROPERTY OF TATE SNYDER KIMSEY ARCHITECTS AND MAY NOT BE REPRODUCED OR USED FOR ANY PURPOSE WITHOUT THE ARCHITECTS WRITTEN CONSENT. AS INSTRUMENTS OF SERVICE, THESE DOCUMENTS ARE NOT FINAL AND READY FOR USE, AND THEREFORE NOT VALID, UNLESS THEY ARE SEALED, SIGNED AND DATED.

Consultant

IMEG
www.imegcorp.com
4599 LONGLEY LANE
RENO, NV 89502
P: 775.828.4599
PROJECT #22007707.00

IMEG CORP. RESERVES PROPRIETARY RIGHTS, INCLUDING COPYRIGHTS, TO THIS DRAWING AND THE DATA SHOWN THEREON. SAID DRAWING AND/OR DATA ARE THE EXCLUSIVE PROPERTY OF IMEG CORP. AND SHALL NOT BE USED OR REPRODUCED FOR ANY OTHER PROJECT WITHOUT THE EXPRESS WRITTEN APPROVAL AND PARTICIPATION OF IMEG CORP. ©2022 IMEG CORP.

0 1 2 3
REF. SCALE IN INCHES PROJECT #22007707.00

PLEASE RECYCLE

Project
SPARKS FIRE STATION #6

**6963 WINGFIELD HILLS ROAD,
SPARKS, NV 89436**

Job No: 22-043

Owner
CITY OF SPARKS

BID SET

REVISIONS		
REV	DATE	DESCRIPTION

Sheet Title
TECHNOLOGY DIAGRAMS

Date: 01/04/2024
Sheet No:
T0.12

TECHNOLOGY EQUIPMENT SCHEDULE

THE EQUIPMENT LIST ABBREVIATIONS AND THE TECHNOLOGY EQUIPMENT SCHEDULE ARE FOR THE CONVENIENCE OF THE CONTRACTOR. EACH CONTRACTOR SHALL BE RESPONSIBLE FOR VERIFICATION OF QUANTITIES AND SHALL FURNISH ALL MATERIAL REQUIRED, WHETHER SPECIFIED OR NOT, TO PRODUCE A SATISFACTORY WORKING SYSTEM.

CATALOG NUMBERS ARE NOT TO BE CONSIDERED COMPLETE BUT ARE GIVEN ONLY TO AID THE CONTRACTOR IN THE SEARCH FOR MATERIAL. NO MATERIAL SHALL BE ORDERED BY MANUFACTURER AND CATALOG NUMBER ONLY. EACH CONTRACTOR SHALL FIRST READ THE COMPLETE DESCRIPTION OF THE MATERIAL ON THESE DRAWINGS AND SPECIFICATIONS. THE FIRST MANUFACTURER LISTED IS THE BASIS OF DESIGN. "STANDARD COLOR" INDICATES FACTORY FINISH AVAILABLE AT NO ADDITIONAL CHARGE.

EQUIPMENT LIST ABBREVIATION	EQUIPMENT LIST DESCRIPTION	MANUFACTURER AND MODEL
AC-R1-W	INSTALL OUTLET IN A 4" SQUARE BACKBOX WITH A SINGLE GANG PLASTER RING. INSTALL A 3/4" EMT CONDUIT TO NEAREST ACCESSIBLE CEILING-OR UNLESS OTHERWISE NOTED. CARD READER AND CABLING BY OWNER'S SECURITY CONTRACTOR.	OWNER'S SECURITY CONTRACTOR
AV-KP1-W	INSTALL OUTLET IN A 4" SQUARE BACKBOX WITH A SINGLE GANG PLASTER RING. INSTALL A 3/4" EMT CONDUIT TO NEAREST ACCESSIBLE CEILING-OR UNLESS OTHERWISE NOTED. PROVIDE (1) VIOLET, PLENUM RATED, CATEGORY 6 DATA CABLE TERMINATED DIRECTLY TO PURVIS ROOM CONTROLLER. PURVIS ROOM CONTROLLER PROVIDED AND INSTALLED BY AV VENDOR.	NO COVER PLATE PLUG: (CAT6) - 760244128 CABLE: (1)UN874025914/10 (VIOLET) PANDUIT BELDEN LEVITON
AV-SP1-C	INSTALL SPEAKER MANUFACTURER'S BACK BOX. INSTALL A 3/4" EMT CONDUIT TO NEAREST ACCESSIBLE CEILING OR UNLESS OTHERWISE NOTED. SPEAKERS AND CABLING PROVIDED BY AV VENDOR.	OWNER'S AV CONTRACTOR
AV-SP1-W	INSTALL SPEAKER MANUFACTURER'S BACK BOX. INSTALL A 3/4" EMT CONDUIT TO NEAREST ACCESSIBLE CEILING OR UNLESS OTHERWISE NOTED. SPEAKERS AND CABLING PROVIDED BY AV VENDOR.	OWNER'S AV CONTRACTOR
AV-VC1-W	INSTALL OUTLET IN A 4" SQUARE BACKBOX WITH A SINGLE GANG PLASTER RING. INSTALL A 3/4" EMT CONDUIT TO NEAREST ACCESSIBLE CEILING-OR UNLESS OTHERWISE NOTED. VOLUME CONTROLLER AND CABLING PROVIDED BY AV VENDOR.	OWNER'S AV CONTRACTOR
PW-CPW-1	MULTI-GANG OF FIRE RATED CABLE PATHWAYS. DESIGNED TO ALLOW [TWO][THREE][FOUR][SEVEN] PATHWAY UNITS. ALL STRUCTURED CABLING BUNDLES SHALL UTILIZE AN ENCLOSED FIRE-RATED PATHWAY DEVICE WHEREVER CABLES PENETRATE RATED WALLS. THE FIRE RATED PATHWAY SHALL CONTAIN A BUILT-IN FIRE SEALING SYSTEM SUFFICIENT TO MAINTAIN THE HOURLY FIRE RATING OF THE BARRIER BEING PENETRATED. THE SELF-CONTAINED SEALING SYSTEM SHALL AUTOMATICALLY ADJUST TO THE INSTALLED CABLE LOADING AND SHALL PERMIT CABLES TO BE INSTALLED, REMOVED, OR RETROFITTED WITHOUT THE NEED TO REMOVE OR REINSTALL FIRESTOP MATERIALS. THE PATHWAY SHALL BE UL CERTIFIED AND/OR FM SYSTEMS APPROVED AND TESTED TO THE REQUIREMENTS OF ASTM E814 (UL1479) AND CAN/ULC-S115.	STI EZ PATH #EZDP44S2
PW-PB-F-W	JUNCTION PULL BOX, SIZE PER N.E.C., SEE SPECIFICATIONS FOR GENERAL CONSTRUCTION, USE OF THIS SYMBOL DOES NOT INDICATE ALL JUNCTION BOXES REQUIRED FOR THIS CONTRACT ARE SHOWN.	SEE DIVISION 27 SPECIFICATIONS
SC-4ER	4-POST EQUIPMENT RACK WITH #12-24 THREADED RAILS, 84" HIGH, 21" WIDE, 22"-28" DEEP SUPPORTING STANDARD 19" MOUNTING SPACE. INDEPENDENT ADJUSTABLE FRONT AND REAR MOUNTING RAILS CAN BE ADJUSTED WHILE RACK IS SECURED TO FLOOR. PRINTED RACK SPACE IDENTIFICATION ON ALL EQUIPMENT RAILS. UL LISTED FOR 2000LBS, DURABLE BLACK POWDER COAT FINISH, PROVIDES (45) 1.75 MOUNTING SPACES.	CHATSWORTH #15216-703
SC-CAB-1	44U ENCLOSURE, 84" HIGH, 30" WIDE, 42" DEEP SUPPORTING 19" MOUNTING SPACE.	CHATSWORTH Z4-21N-
SC-FDC-1	OPTICAL FIBER DISTRIBUTION CABINET, WALL MOUNT. 48 FIBER MAXIMUM CAPACITY. DROP DOWN FRONT DOOR, TRANSPARENT JUMPER SIDE DOOR, STRAIN RELIEF BRACKETS, AND JUMPER ROUTING GUIDES. REQUIRES (1) 19" X 1.75" RACK MOUNTING SPACE. PROVIDE WITH CLAMP AND GROUNDING KIT, COUPLING PANEL(S), AND JUMPERS. REFER TO SPECIFICATIONS SECTION 27 11 00 FOR ADDITIONAL INFORMATION.	CORNING CCH-01U SPLICE CASSETE: CCH-CS12-AE-P00RE HUBBELL
SC-GND-1	GROUNDING BUSBAR, WALL MOUNT. 4" H X 20" L X 1/4" D COPPER, ELECTRICALLY ISOLATED BY INSULATORS INTEGRAL TO MOUNTING BRACKETS. COPPER GROUND BAR IS 1/4" THICK AND STAND OFF 2.75" FROM WALL. THE 20" BUSBAR PROVIDES CONNECTION FOR TWENTY SEVEN (27) 2-HOLE COMPRESSION LUGS RESPECTIVELY WITH 5/8" OR 1" CENTERS. ANSI/TIA-607 AND BICSI COMPLIANT. UL LISTED. REFER TO GROUND BAR SPECIFICATION SECTION 27 11 00 FOR ADDITIONAL INFORMATION.	CHATSWORTH 40153-020 PANDUIT ERICO HARGER
SC-GND-2	GROUNDING BUSBAR, WALL MOUNT. 2" H X 12" L X 1/4" D COPPER, ELECTRICALLY ISOLATED BY INSULATORS INTEGRAL TO MOUNTING BRACKETS. COPPER GROUND BAR IS 1/4" THICK AND STAND OFF 2.75" FROM WALL. THE 12" BUSBAR PROVIDES CONNECTION FOR NINE (9) 2-HOLE COMPRESSION LUGS RESPECTIVELY WITH 5/8" OR 1" CENTERS. ANSI/TIA-607 AND BICSI COMPLIANT. UL LISTED. REFER TO GROUND BAR SPECIFICATION SECTION 27 11 00 FOR ADDITIONAL INFORMATION.	CHATSWORTH 13622-012 PANDUIT ERICO HARGER
SC-GND-3	19" RACK-MOUNT HORIZONTAL GROUND BAR. (3/16" x 3/4" X 19") PROVIES CONNECTION FOR (10) 2-HOLE COMPRESSION LUGS RESPECTIVELY WITH 5/8" OR 1" CENTERS. ANSI/TIA-607 AND BICSI COMPLIANT. UL LISTED. REFER TO SPECIFICATION SECTION 27 11 00 FOR ADDITIONAL INFORMATION.	CHATSWORTH #10610-019
SC-IO-CAP	INFORMATION OUTLET, CEILING MOUNT. INSTALL A 4" SQUARE DEEP BACKBOX. INSTALL A 3/4" EMT CONDUIT TO NEAREST ACCESSIBLE CEILING-OR UNLESS OTHERWISE NOTED. TERMINATED CABLE IN A 1-PORT, SURFACE MOUNT BOX ABOVE ACCESSIBLE CEILING. PROVIDE 6' PATCH CORD FOR CONNECTION TO OWNER PROVIDED WIRELESS ACCESS POINT. WIRELESS ACCESS POINT PROVIDED BY OWNER, INSTALLED BY CONTRACTOR.	COVER PLATE: M14AS SERIES COLOR TO MATCH ADJACENT OUTLETS. JACK: (1)(CAT6) - UNJ600-BL CABLE: (1)COMMSCOPE, #UN874028404/10 (BLACK) PANDUIT BELDEN LEVITON
SC-IO-F	INFORMATION OUTLET, FLOORBOX OR POKE-THROUGH MOUNT. ----[2, 4, 6]---- PORT COVERPLATE AS INDICATED ON DRAWINGS AND INFORMATION OUTLET SCHEDULE. REFER TO INFORMATION OUTLET SCHEDULE FOR PIN CONFIGURATION. " # " INDICATES INFORMATION OUTLET FACEPLATE CONFIGURATION AS INDICATED ON THE PLANS. INSTALL INFORMATION OUTLET IN E.C. PROVIDED FLOORBOX. PROVIDE ADAPTER PLATE FOR 106-TYPE FACEPLATE WHERE REQUIRED. COORDINATE ADDITIONAL MOUNTING REQUIREMENTS WITH E.C. PROVIDE REMOVABLE BLANK INSERTS FOR UNUSED PORTS. REFER TO SPECIFICATION SECTION 27 15 00 FOR ADDITIONAL INFORMATION.	COVER PLATE: M14AS SERIES COLOR TO MATCH ADJACENT OUTLETS. JACK: (4)(CAT6) - UNJ600-BK CABLE: (4)COMMSCOPE, #UN874028404/10 (BLACK) PANDUIT BELDEN LEVITON
SC-IO-W1	INFORMATION OUTLET, WALL MOUNT. 2-PORT COVERPLATE REFER TO INFORMATION OUTLET SCHEDULE FOR PIN CONFIGURATION. " # "INDICATES INFORMATION OUTLET FACEPLATE CONFIGURATION AS INDICATED ON THE DRAWINGS. INSTALL INFORMATION OUTLET IN A 4" SQUARE BACKBOX WITH A SINGLE GANG PLASTER RING. INSTALL A 1 1/4" EMT CONDUIT TO NEAREST ACCESSIBLE CEILING-OR UNLESS OTHERWISE NOTED. PROVIDE REMOVABLE BLANK INSERTS FOR UNUSED PORTS. REFER TO SPECIFICATION SECTION 27 15 00 FOR ADDITIONAL INFORMATION.	COVER PLATE: M14AS SERIES COLOR TO MATCH ADJACENT OUTLETS. JACK: (1)(CAT6) - UNJ600-BK CABLE: (1)COMMSCOPE, #UN874028404/10 (BLACK) PANDUIT BELDEN LEVITON
SC-IO-W2	INFORMATION OUTLET, WALL MOUNT. 4-PORT COVERPLATE REFER TO INFORMATION OUTLET SCHEDULE FOR PIN CONFIGURATION. SEE SC-IO-W1 FOR ADDITIONAL REQUIREMENTS.	COVER PLATE: M14AS SERIES COLOR TO MATCH ADJACENT OUTLETS. JACK: (1)(CAT6) - UNJ600-BK (1)(CAT6) - UNJ600-BL CABLE: (1)COMMSCOPE, #UN874028404/10 (BLACK) (1)COMMSCOPE, #UN874043004/10 (BLUE) PANDUIT BELDEN LEVITON

TECHNOLOGY EQUIPMENT SCHEDULE

THE EQUIPMENT LIST ABBREVIATIONS AND THE TECHNOLOGY EQUIPMENT SCHEDULE ARE FOR THE CONVENIENCE OF THE CONTRACTOR. EACH CONTRACTOR SHALL BE RESPONSIBLE FOR VERIFICATION OF QUANTITIES AND SHALL FURNISH ALL MATERIAL REQUIRED, WHETHER SPECIFIED OR NOT, TO PRODUCE A SATISFACTORY WORKING SYSTEM.

CATALOG NUMBERS ARE NOT TO BE CONSIDERED COMPLETE BUT ARE GIVEN ONLY TO AID THE CONTRACTOR IN THE SEARCH FOR MATERIAL. NO MATERIAL SHALL BE ORDERED BY MANUFACTURER AND CATALOG NUMBER ONLY. EACH CONTRACTOR SHALL FIRST READ THE COMPLETE DESCRIPTION OF THE MATERIAL ON THESE DRAWINGS AND SPECIFICATIONS. THE FIRST MANUFACTURER LISTED IS THE BASIS OF DESIGN. "STANDARD COLOR" INDICATES FACTORY FINISH AVAILABLE AT NO ADDITIONAL CHARGE.

EQUIPMENT LIST ABBREVIATION	EQUIPMENT LIST DESCRIPTION	MANUFACTURER AND MODEL
SC-IO-W4	INFORMATION OUTLET, WALL MOUNT. 4-PORT COVERPLATE REFER TO INFORMATION OUTLET SCHEDULE FOR PIN CONFIGURATION. SEE SC-IO-W1 FOR ADDITIONAL REQUIREMENTS.	COVER PLATE: M14AS SERIES COLOR TO MATCH ADJACENT OUTLETS. JACK: (3)(CAT6) - UNJ600-BK (1)(CAT6) - UNJ600-BL CABLE: (3)COMMSCOPE, #UN874028404/10 (BLACK) (1)COMMSCOPE, #UN874043004/10 (BLUE) PANDUIT BELDEN LEVITON
SC-IO-WAP	INFORMATION OUTLET, WALL MOUNT. SEE SC-IO-CAP FOR ADDITIONAL REQUIREMENTS.	SEE SC-IO-CAP FOR REQUIREMENTS.
SC-IO-WTV1	INFORMATION OUTLET, WALL MOUNT. 4-PORT COVERPLATE REFER TO INFORMATION OUTLET SCHEDULE FOR PIN CONFIGURATION. " # "INDICATES INFORMATION OUTLET FACEPLATE CONFIGURATION AS INDICATED ON THE DRAWINGS. INSTALL INFORMATION OUTLET IN A 4" SQUARE BACKBOX WITH A SINGLE GANG PLASTER RING. INSTALL A 1 1/4" EMT CONDUIT TO NEAREST ACCESSIBLE CEILING-OR UNLESS OTHERWISE NOTED. PROVIDE REMOVABLE BLANK INSERTS FOR UNUSED PORTS. REFER TO SPECIFICATION SECTION 27 15 00 FOR ADDITIONAL INFORMATION.	COVER PLATE: M14AS SERIES COLOR TO MATCH ADJACENT OUTLETS. JACK: (1)(CAT6) - UNJ600-BK CABLE: (1)COMMSCOPE, #UN874028404/10 (BLACK) PANDUIT BELDEN LEVITON
SC-IO-WTV2	INFORMATION OUTLET, WALL MOUNT. 4-PORT COVERPLATE REFER TO INFORMATION OUTLET SCHEDULE FOR PIN CONFIGURATION. " # "INDICATES INFORMATION OUTLET FACEPLATE CONFIGURATION AS INDICATED ON THE DRAWINGS. INSTALL INFORMATION OUTLET IN A 4" SQUARE BACKBOX WITH A SINGLE GANG PLASTER RING. INSTALL A 1 1/4" EMT CONDUIT TO NEAREST ACCESSIBLE CEILING-OR UNLESS OTHERWISE NOTED. PROVIDE REMOVABLE BLANK INSERTS FOR UNUSED PORTS. REFER TO SPECIFICATION SECTION 27 15 00 FOR ADDITIONAL INFORMATION.	COVER PLATE: M14AS SERIES COLOR TO MATCH ADJACENT OUTLETS. JACK: (2)(CAT6) - UNJ600-BK CABLE: (2)COMMSCOPE, #UN874028404/10 (BLACK) PANDUIT BELDEN LEVITON
SC-MPP-1	MODULAR PATCH PANEL, 24-MODULAR RJ-45 TERMINATIONS, MOUNTS DIRECTLY TO EIA/TIA STANDARD 19" RELAY RACK, PORT IDENTIFICATION NUMBERS, PROVIDED WITH COLOR CODING AND LABEL HOLDER KITS, U.L. LISTED. REQUIRES (1) 1.75" MOUNTING SPACES.	COMMSCOPE #760180042 PANDUIT BELDEN ORTRONICS LEVITON
SC-MPP-2	MODULAR PATCH PANEL, 48-MODULAR RJ-45 TERMINATIONS, MOUNTS DIRECTLY TO EIA/TIA STANDARD 19" RELAY RACK, PORT IDENTIFICATION NUMBERS, PROVIDED WITH COLOR CODING AND LABEL HOLDER KITS, U.L. LISTED. REQUIRES (2) 1.75" MOUNTING SPACES.	COMMSCOPE #760180059 PANDUIT BELDEN ORTRONICS LEVITON
SC-NS-1	OWNER PROVIDED NETWORK SWITCH.	OWNER PROVIDED AND INSTALLED
SC-TTB	TELECOMMUNICATIONS TERMINAL BOARD, 4'X8'X3/4" A-C GRADE FIRE-RATED PLYWOOD. EXPOSED SIDE SHALL BE SMOOTH. MOUNT VERTICALLY WITH TOP OF PLYWOOD AT 8'-6" AFF. IN THE EVENT THE MANUFACTURER'S RATING STAMP IS NOT VISIBLE ON THE SMOOTH SIDE, THE CONTRACTOR SHALL PROVIDE A LAMINATED LETTER FROM THE MANUFACTURER OR SUPPLIER CERTIFYING THAT THE PLYWOOD IS FIRE-RATED AND ATTACH THE LETTER WITH A PICTURE OF THE RATING STAMP, TO THE PLYWOOD. FIRE RATED PLYWOOD SHALL NOT BE PAINTED OR TREATED WITH ANY TYPE OF SEALANT THAT WOULD LESSEN THE INTEGRITY OF THE FIRE RATING.	N/A
SC-UPS	SMARTPRO 120V 200VA, 1.92kW LINE-INTERACTIVE SINE WAVE UPS, 2U, EXTENDED RUN, WITH NETWORK INTERFACE CARD, #WEBCARDLX.	TRIPP LITE #SMART2600RM2U OR APPROVED EQUAL
SC-VWM-1	DOUBLE SIDED VERTICAL WIRE MANAGER, 7'H x 4.4"W x 16.15"D. REMOVABLE FRONT COVER HINGES ON LEFT OR RIGHT. SPOOLS FOR INTEGRAL BEND RADIUS CONTROL.	CHATSWORTH PRODUCTS #30094-703
SC-WP	INFORMATION OUTLET, WALL MOUNT PHONE. " W " PROVIDE (1) RJ-45 JACK FOR VOICE AT +48" AFF FOR WALL HUNG PHONE. PROVIDE WITH STAINLESS STEEL FACEPLATE, MATING LUGS. INSTALL INFORMATION OUTLET IN A 4" SQUARE BACKBOX WITH A SINGLE GANG PLASTER RING. INSTALL A 1 1/4" EMT CONDUIT TO NEAREST ACCESSIBLE CEILING-OR UNLESS OTHERWISE NOTED.	COVER PLATE: #66441024-01 JACK: (CAT6) - UNJ600-BK CABLE: (1)COMMSCOPE, #UN874043004/10 (BLUE) PANDUIT BELDEN LEVITON
VS-CM-1		
VS-CM-4	MULTI-SENSOR LENS, INTERIOR IP CAMERA. INSTALL A 4" SQUARE DEEP BACKBOX. INSTALL A 3/4" EMT CONDUIT TO NEAREST ACCESSIBLE CEILING-OR UNLESS OTHERWISE NOTED. TERMINATED CABLE IN A 1-PORT, SURFACE MOUNT BOX ABOVE ACCESSIBLE CEILING. PROVIDE 6' PATCH CORD FOR CONNECTION TO SURVEILLANCE CAMERA. SURVEILLANCE CAMERA PROVIDED AND INSTALLED BY SECURITY VENDOR.	SEE VS-CM-1 FOR REQUIREMENTS

INFORMATION OUTLET SCHEDULE

SINGLE GANG WALLPLATES

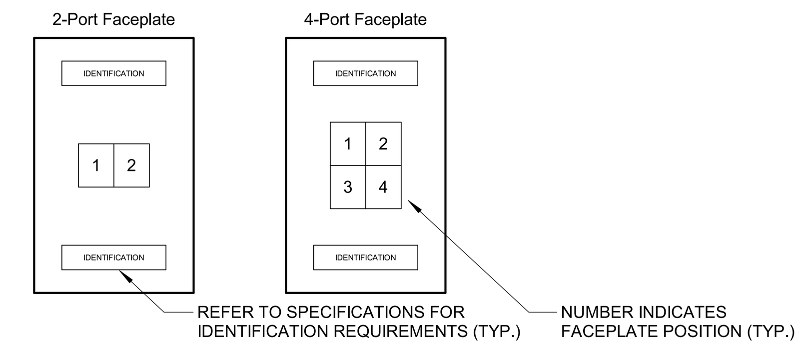

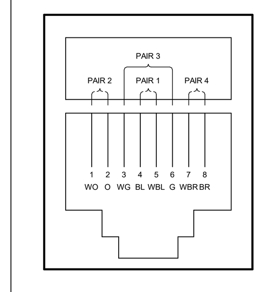

ANSI/TIA/EIA T568B PIN/PAIR ASSIGNMENT

NOTES:
1. PROVIDE REMOVABLE BLANK INSERT(S) FOR ALL UNUSED PORTS.
2. REFER TO SPECIFICAITONS SECTION 27 05 53 FOR ADDITIONAL INFORMATION ON LABELING REQUIREMENTS.

SCHEDULE NOTES:
1. LOCATION OF FUTURE OR OWNER PROVIDED WIRELESS ACCESS POINT. PROVIDE A 20' SLACK COIL AT THE... SUPPORT FOR POSSIBLE RELOCATION AFTER WIRELESS SURVEY.

LEGEND

DATA	CAT 6 RJ-45
BLANK	BLANK FILLER MODULE

CONFIGURATION	FACEPLATE PORTS	FACEPLATE PORT IDENTIFICATION: POSITION 1 JACK TYPE	POSITION 2 JACK TYPE	POSITION 3 JACK TYPE	POSITION 4 JACK TYPE	NOTES
C1	1	DATA	--	--	--	
C1-TV	4	DATA	BLANK	BLANK	BLANK	
C1-WAP	1	DATA	BLANK	--	--	
C2	4	DATA	DATA	BLANK	BLANK	
C2-TV	4	DATA	DATA	BLANK	BLANK	
C4	4	DATA	DATA	DATA	DATA	
W	1	DATA				

CONTROLLED SECURITY SCHEME (CSS) TYPE SCHEDULE

1. ELECTRONIC DOOR HARDWARE SUCH AS ELECTRIC STRIKES, ELECTRIC LATCH RETRACTION, ETC. SHALL BE PROVIDED AND INSTALLED BY OTHERS.
2. REFER TO THE TECHNOLOGY EQUIPMENT SCHEDULE FOR CREDENTIAL READER TYPE INFORMATION.

DOOR #	ROUGH-IN ONLY	CREDENTIAL READER: CREDENTIAL READER TYPE	INTEGRATION: REMOTE UNLOCK VIA PUSHBUTTON	INTEGRATION: VIDEO SURVEILLANCE	REQUEST TO EXIT: MOTION DETECTOR	REQUEST TO EXIT: INTERNAL ELECTRIFIED HARDWARE CONNECTION (BY OTHERS)	DOOR HARDWARE / MONITORING: ELECTRONIC LOCKING HARDWARE (BY OTHERS)	MONITOR DOOR POSITION SWITCH SPDT	MONITOR DOOR POSITION SWITCH DPDT	MONITOR DOOR POSITION SWITCH - ROOF HATCH	NOTES
101		R1	•	•		•	•		•		
102		R1				•	•	•			
103A		R1				•	•	•			
106		R1				•	•	•			
107		R1				•	•	•			
122H		N/A								•	
122H		N/A								•	
123		R1				•	•	•			
124		R1			•		•	•			
136		R1			•		•	•			
138		R1				•	•	•			
142		R1				•	•	•			
144H		N/A								•	
144H		N/A								•	
145A		R1				•	•	•			
148A		R1				•	•	•			
148B		R1				•	•	•			
151A		R1				•	•	•			

INDIVIDUAL CAMERA REQUIREMENTS SCHEDULE

CAMERA #	CAMERA TYPE	TELECOM ROOM #	MOUNTING TYPE	NOTES
101-1	CM-1	MDF	SURFACE WALL	
107-1	CM-1	MDF	SURFACE WALL	
118-1	CM-1	MDF	SURFACE WALL	
123-1	CM-1	MDF	RECESSED CEILING	
123-1	CM-1	MDF	RECESSED CEILING	
123-1	CM-1	MDF	RECESSED CEILING	
123-1	CM-1	MDF	RECESSED CEILING	
124-1	CM-1	MDF	SURFACE WALL	
129-1	CM-1	MDF	SURFACE WALL	
142-1	CM-1	IDF	SURFACE WALL	
147-1	CM-4	IDF	SURFACE WALL	
151A-1	CM-1	IDF	SURFACE WALL	
152-1	CM-1	IDF	SURFACE WALL	

tsk
314 South Water Street,
Suite 100
Henderson, NV 89015
phone: 702.456.3000
fax: 702.898.6209
www.tska.com

PROFESSIONAL ENGINEER STATE OF NEVADA
VENKATESH THUMALA JANAKIRAMAN
Exp: 06/30/2025
ELECTRICAL
No. 030510
01/03/2024

THESE DRAWINGS AND SPECIFICATIONS ARE THE PROPERTY OF TATE SNYDER KIMSEY ARCHITECTS AND MAY NOT BE REPRODUCED OR USED FOR ANY PURPOSE WITHOUT THE ARCHITECTS WRITTEN CONSENT.
AS INSTRUMENTS OF SERVICE, THESE DOCUMENTS ARE NOT FINAL AND READY FOR USE, AND THEREFORE NOT VALID, UNLESS THEY ARE SEALED, SIGNED AND DATED.

Consultant

IMEG
4599 LONGLEY LANE
RENO, NV 89502
P: 775.826.4889
PROJECT #22007707.00
www.imegcorp.com

IMEG CORP. RESERVES PROPRIETARY RIGHTS, INCLUDING COPYRIGHTS, TO THIS DRAWING AND THE DATA SHOWN THEREON. SAID DRAWING AND/OR DATA ARE THE EXCLUSIVE PROPERTY OF IMEG CORP. AND SHALL NOT BE USED OR REPRODUCED FOR ANY OTHER PROJECT WITHOUT THE EXPRESS WRITTEN APPROVAL AND PARTICIPATION OF IMEG CORP. ©2022 IMEG CORP.

0 1 2 3
REF. SCALE IN INCHES PROJECT #22007707.00

PLEASE RECYCLE

Project
SPARKS FIRE STATION #6

**6963 WINGFIELD HILLS ROAD,
SPARKS, NV 89436**

Job No: 22-043

Owner
CITY OF SPARKS

BID SET

REVISIONS		
REV	DATE	DESCRIPTION

Sheet Title
TECHNOLOGY SCHEDULES

Date: 01/04/2024
Sheet No:

T0.20

KEYNOTES: #

1. PROVIDE UNDERGROUND CONDUIT WITH (2) 3-CELL MAXCELL INNERDUCT, #MXE86383. MAINTAIN CONDUIT SEPARATION FROM OTHER TRADES AS REQUIRED.
2. PROVIDE CONDUIT STUBBED OUT 5' FROM PULLBOX FOR CONNECTION TO SERVICE PROVIDER PEDESTAL. COORDINATE FINAL LOCATION WITH CIVIL AND SERVICE PROVIDER PRIOR TO INSTALLATION.

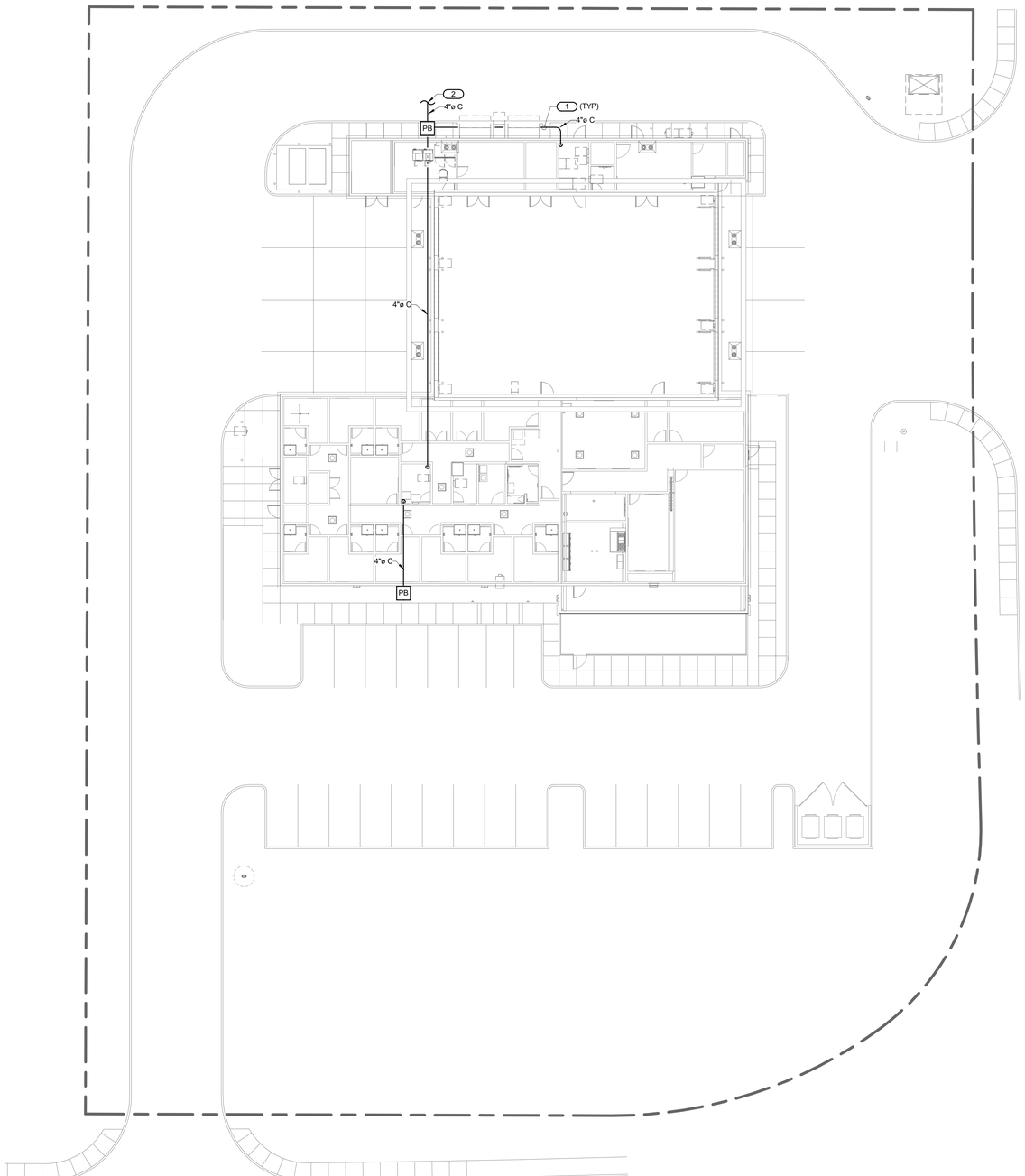

NORTH

1 **SITE PLAN - TECHNOLOGY**
1/16" = 1'-0"

tsk
314 South Water Street,
Suite 100
Henderson, NV 89015
phone: 702.456.3000
fax: 702.898.6209
www.tska.com

REGISTERED PROFESSIONAL ENGINEER
VENKATESH THANIKA JANAKIRAMAN
Exp: 06/30/2025
ELECTRICAL
No. 030510
STATE OF NEVADA
01/03/2024

THESE DRAWINGS AND SPECIFICATIONS ARE THE PROPERTY OF TATE SNYDER KIMSEY ARCHITECTS AND MAY NOT BE REPRODUCED OR USED FOR ANY PURPOSE WITHOUT THE ARCHITECTS WRITTEN CONSENT. AS INSTRUMENTS OF SERVICE, THESE DOCUMENTS ARE NOT FINAL AND READY FOR USE, AND THEREFORE NOT VALID, UNLESS THEY ARE SEALED, SIGNED AND DATED.

Consultant

IMEG
www.imegcorp.com
4599 LONGLEY LANE
RENO, NV 89502
P: 775.828.4599
PROJECT #22007707.00

IMEG CORP. RESERVES PROPRIETARY RIGHTS, INCLUDING COPYRIGHTS, TO THIS DRAWING AND THE DATA SHOWN THEREON. SAID DRAWING AND/OR DATA ARE THE EXCLUSIVE PROPERTY OF IMEG CORP. AND SHALL NOT BE USED OR REPRODUCED FOR ANY OTHER PROJECT WITHOUT THE EXPRESS WRITTEN APPROVAL AND PARTICIPATION OF IMEG CORP. ©2022 IMEG CORP.

0 1 2 3
REF. SCALE IN INCHES PROJECT #22007707.00

PLEASE RECYCLE

Project
SPARKS FIRE STATION #6

6963 WINGFIELD HILLS ROAD, SPARKS, NV 89436

Job No: 22-043

Owner
CITY OF SPARKS

BID SET

REVISIONS		
REV	DATE	DESCRIPTION

Sheet Title
SITE PLAN - TECHNOLOGY

Date: 01/04/2024
Sheet No:
T1.00

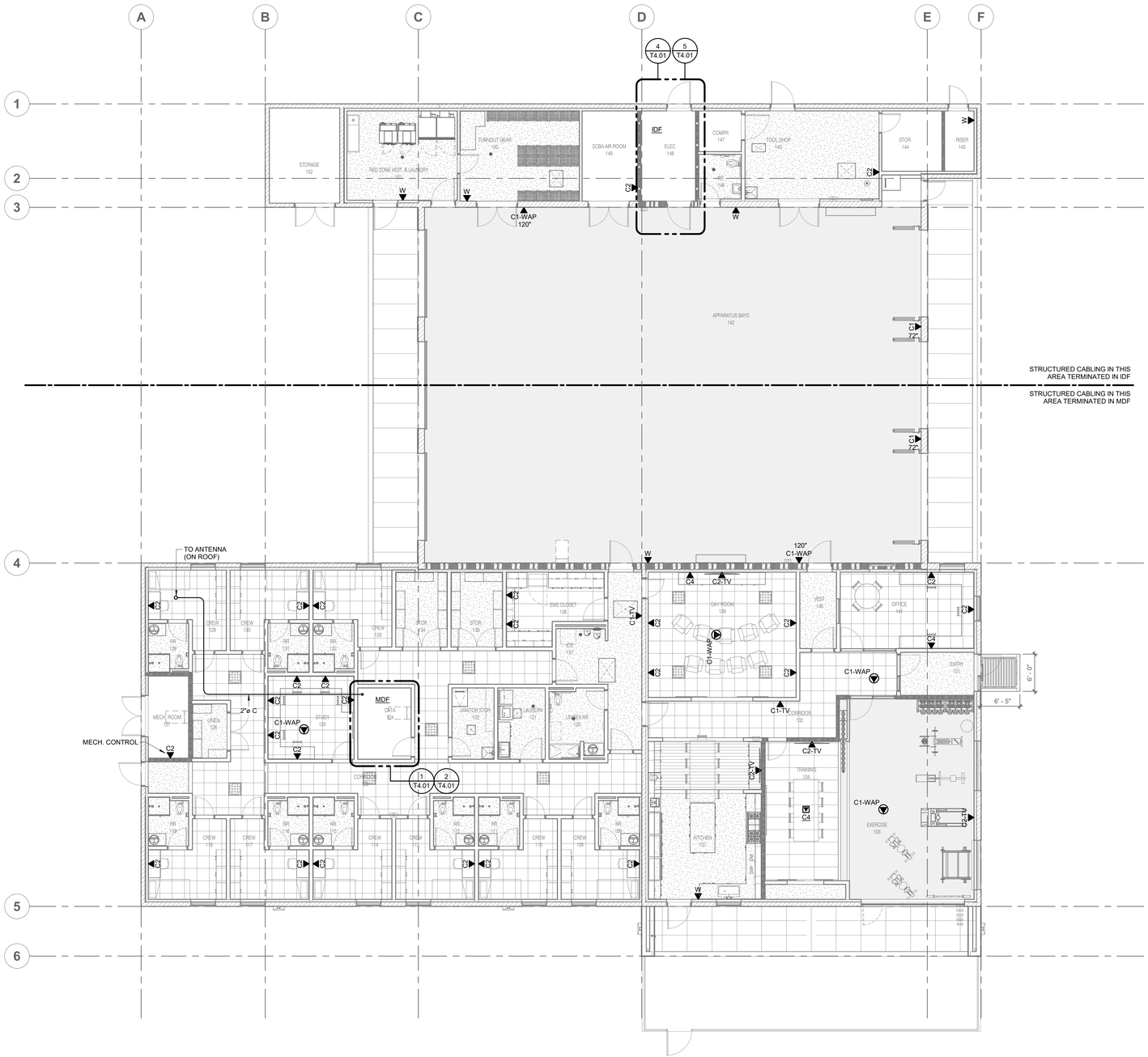

NORTH

1 **FLOOR PLAN - VOICE/DATA**

1/8" = 1'-0"

tsk

314 South Water Street,
Suite 100
Henderson, NV 89015
phone: 702.456.3000
fax: 702.898.6209
www.tska.com

THESE DRAWINGS AND SPECIFICATIONS ARE THE PROPERTY OF TATE SNYDER KIMSEY ARCHITECTS AND MAY NOT BE REPRODUCED OR USED FOR ANY PURPOSE WITHOUT THE ARCHITECTS WRITTEN CONSENT. AS INSTRUMENTS OF SERVICE, THESE DOCUMENTS ARE NOT FINAL AND READY FOR USE, AND THEREFORE NOT VALID, UNLESS THEY ARE SEALED, SIGNED AND DATED.

Consultant

IMEG
www.imegcorp.com
4599 LONGLEY LANE
RENO, NV 89502
P: 775.828.4599
PROJECT #22007707.00

IMEG CORP. RESERVES PROPRIETARY RIGHTS, INCLUDING COPYRIGHTS, TO THIS DRAWING AND THE DATA SHOWN THEREON. SAID DRAWING AND/OR DATA ARE THE EXCLUSIVE PROPERTY OF IMEG CORP. AND SHALL NOT BE USED OR REPRODUCED FOR ANY OTHER PROJECT WITHOUT THE EXPRESS WRITTEN APPROVAL AND PARTICIPATION OF IMEG CORP. ©2022 IMEG CORP.

0 1 2 3

REF. SCALE IN INCHES PROJECT #22007707.00

PLEASE RECYCLE

Project

SPARKS FIRE STATION #6

6963 WINGFIELD HILLS ROAD, SPARKS, NV 89436

Job No: 22-043

Owner

CITY OF SPARKS

BID SET

REVISIONS		
REV	DATE	DESCRIPTION

Sheet Title

FLOOR PLAN - VOICE/DATA

Date: 01/04/2024

Sheet No:

T2.00

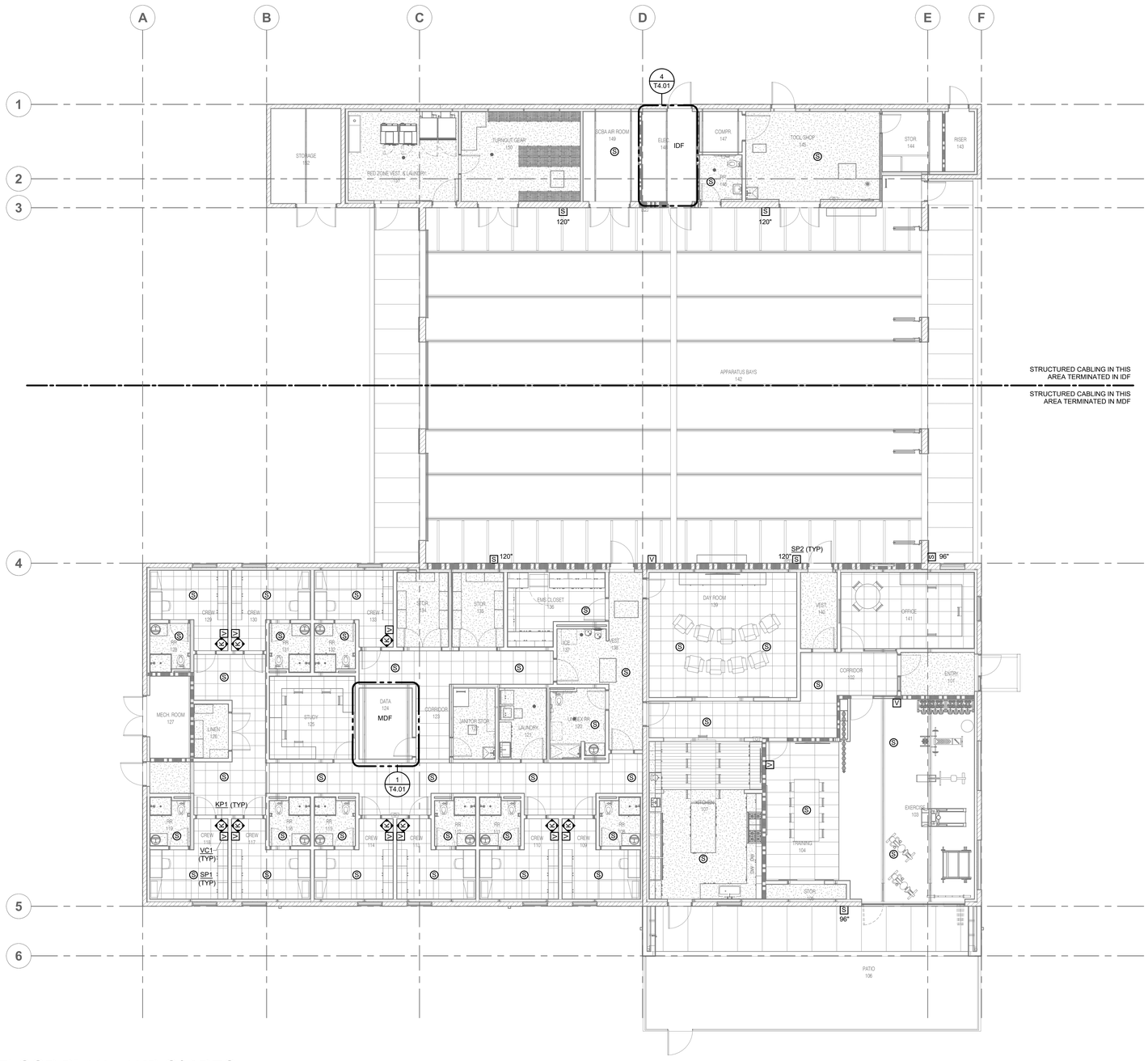

NORTH

1 **FLOOR PLAN - AUDIO/VIDEO**
1/8" = 1'-0"

tsk
314 South Water Street,
Suite 100
Henderson, NV 89015
phone: 702.456.3000
fax: 702.898.6209
www.tska.com

PROFESSIONAL ENGINEER STATE OF NEVADA
KUMATESH TRUMALA JANAKIRAMAN
Exp: 06/30/2025
ELECTRICAL
No. 030510
01/03/2024

THESE DRAWINGS AND SPECIFICATIONS ARE THE PROPERTY OF TATE SNYDER KIMSEY ARCHITECTS AND MAY NOT BE REPRODUCED OR USED FOR ANY PURPOSE WITHOUT THE ARCHITECTS WRITTEN CONSENT.
AS INSTRUMENTS OF SERVICE, THESE DOCUMENTS ARE NOT FINAL AND READY FOR USE, AND THEREFORE NOT VALID, UNLESS THEY ARE SEALED, SIGNED AND DATED.

Consultant

IMEG
4599 LONGLEY LANE
RENO, NV 89502
P: 775.828.4869
PROJECT #22007707.00
www.imegcorp.com

IMEG CORP. RESERVES PROPRIETARY RIGHTS, INCLUDING COPYRIGHTS, TO THIS DRAWING AND THE DATA SHOWN THEREON. SAID DRAWING AND/OR DATA ARE THE EXCLUSIVE PROPERTY OF IMEG CORP. AND SHALL NOT BE USED OR REPRODUCED FOR ANY OTHER PROJECT WITHOUT THE EXPRESS WRITTEN APPROVAL AND PARTICIPATION OF IMEG CORP. ©2022 IMEG CORP.

0 1 2 3
REF. SCALE IN INCHES
PROJECT #22007707.00

PLEASE RECYCLE

Project
SPARKS FIRE STATION #6

6963 WINGFIELD HILLS ROAD, SPARKS, NV 89436

Job No: 22-043

Owner
CITY OF SPARKS

BID SET

REVISIONS		
REV	DATE	DESCRIPTION

Sheet Title
FLOOR PLAN - AUDIO/VIDEO

Date: 01/04/2024
Sheet No:
T2.10

SHEET NOTES:

1. .
2. .
3. .

KEYNOTES: #

1. .
2. .
3. .

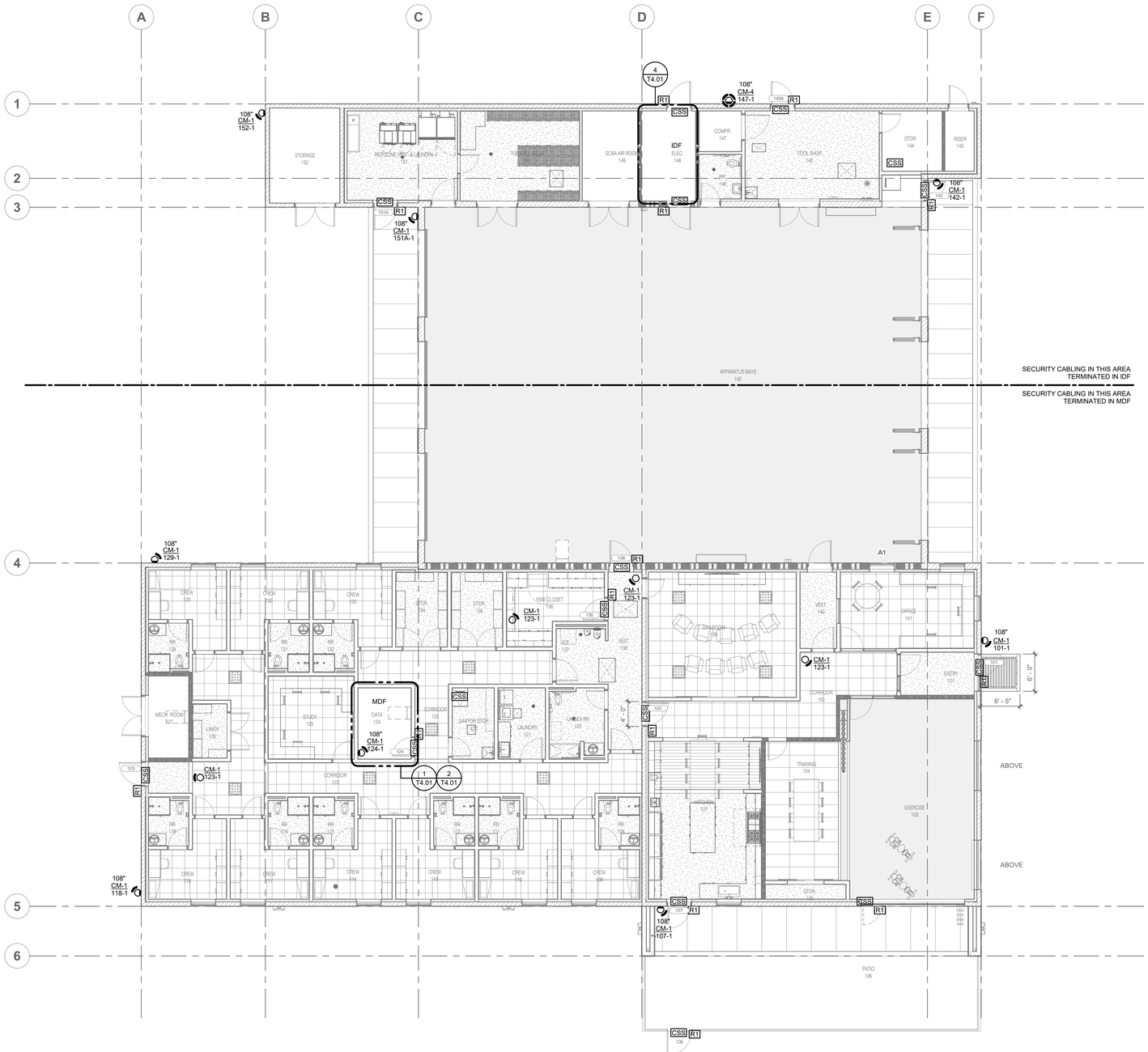

NORTH

1 **FLOOR PLAN - SECURITY**
1/8" = 1'-0"

tsk
314 South Water Street,
Suite 100
Henderson, NV 89015
phone: 702.456.3000
fax: 702.898.6209
www.tska.com

THESE DRAWINGS AND SPECIFICATIONS ARE THE PROPERTY OF TATE SNYDER KIMSEY ARCHITECTS AND MAY NOT BE REPRODUCED OR USED FOR ANY PURPOSE WITHOUT THE ARCHITECTS WRITTEN CONSENT. AS INSTRUMENTS OF SERVICE, THESE DOCUMENTS ARE NOT FINAL AND READY FOR USE, AND THEREFORE NOT VALID, UNLESS THEY ARE SEALED, SIGNED AND DATED.

Consultant

IMEG
4599 LONGLEY LANE
RENO, NV 89502
P: 775.828.4889
PROJECT #22007707.00
www.imegcorp.com

IMEG CORP. RESERVES PROPRIETARY RIGHTS, INCLUDING COPYRIGHTS, TO THIS DRAWING AND THE DATA SHOWN THEREON. SAID DRAWING AND/OR DATA ARE THE EXCLUSIVE PROPERTY OF IMEG CORP. AND SHALL NOT BE USED OR REPRODUCED FOR ANY OTHER PROJECT WITHOUT THE EXPRESS WRITTEN APPROVAL AND PARTICIPATION OF IMEG CORP. ©2022 IMEG CORP.

0 1 2 3
REF. SCALE IN INCHES
PROJECT #22007707.00

PLEASE RECYCLE

Project

SPARKS FIRE STATION #6

6963 WINGFIELD HILLS ROAD, SPARKS, NV 89436

Job No: 22-043

Owner

CITY OF SPARKS

BID SET

REVISIONS		
REV	DATE	DESCRIPTION

Sheet Title

FLOOR PLAN - SECURITY

Date: 01/04/2024

Sheet No:

T2.20

SHEET NOTES:

1. .
2. .
3. .

KEYNOTES: #

1. .
2. .
3. .

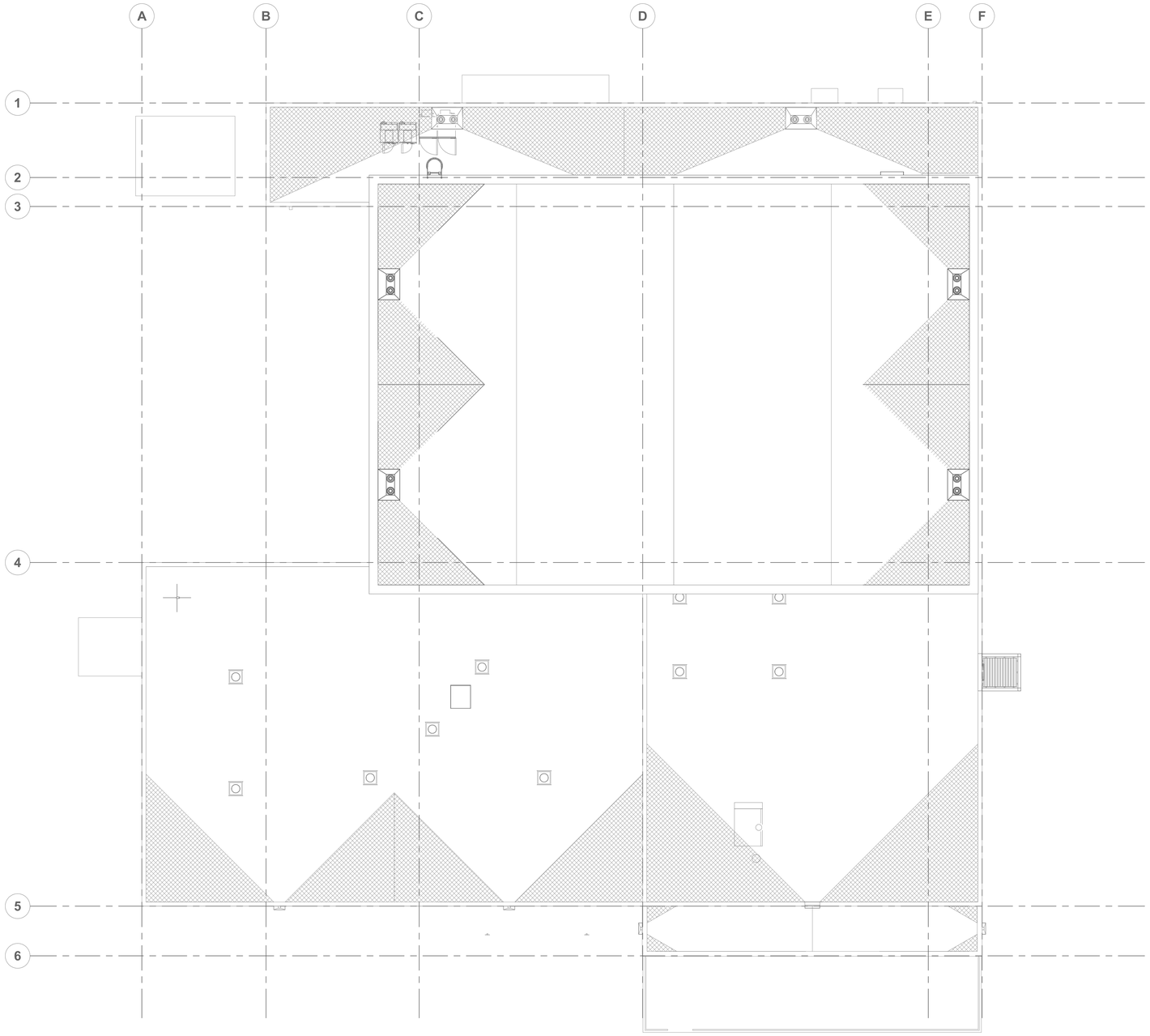

NORTH

1 **ROOF PLAN - TECHNOLOGY**
1/8" = 1'-0"

tsk

314 South Water Street,
Suite 100
Henderson, NV 89015
phone: 702.456.3000
fax: 702.898.6209
www.tska.com

PROFESSIONAL ENGINEER STATE OF NEVADA
KAMATESH TRIMALA JANAKIRAMAN
Exp: 06/30/2025
ELECTRICAL
No. 030510
01/03/2024

THESE DRAWINGS AND SPECIFICATIONS ARE THE PROPERTY OF TATE SNYDER KIMSEY ARCHITECTS AND MAY NOT BE REPRODUCED OR USED FOR ANY PURPOSE WITHOUT THE ARCHITECTS WRITTEN CONSENT. AS INSTRUMENTS OF SERVICE, THESE DOCUMENTS ARE NOT FINAL AND READY FOR USE, AND THEREFORE NOT VALID, UNLESS THEY ARE SEALED, SIGNED AND DATED.

Consultant

IMEG
4599 LONGLEY LANE
RENO, NV 89502
P: 775.828.4889
PROJECT #22007707.00
www.imegcorp.com

IMEG CORP. RESERVES PROPRIETARY RIGHTS, INCLUDING COPYRIGHTS, TO THIS DRAWING AND THE DATA SHOWN THEREON. SAID DRAWING AND/OR DATA ARE THE EXCLUSIVE PROPERTY OF IMEG CORP. AND SHALL NOT BE USED OR REPRODUCED FOR ANY OTHER PROJECT WITHOUT THE EXPRESS WRITTEN APPROVAL AND PARTICIPATION OF IMEG CORP. ©2022 IMEG CORP.

0 1 2 3
REF. SCALE IN INCHES PROJECT #22007707.00

PLEASE RECYCLE

Project

SPARKS FIRE STATION #6

6963 WINGFIELD HILLS ROAD, SPARKS, NV 89436

Job No: 22-043

Owner

CITY OF SPARKS

BID SET

REVISIONS		
REV	DATE	DESCRIPTION

Sheet Title

ROOF PLAN - TECHNOLOGY

Date: 01/04/2024

Sheet No:

T3.00

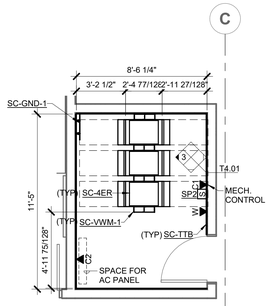

NORTH 1 **TECHNOLOGY ENLARGED LAYOUT PLAN - MDF**
1/4" = 1'-0"

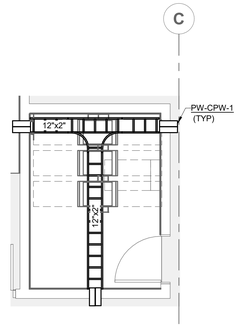

NORTH 2 **TECHNOLOGY ENLARGED PATHWAY PLAN - MDF**
1/4" = 1'-0"

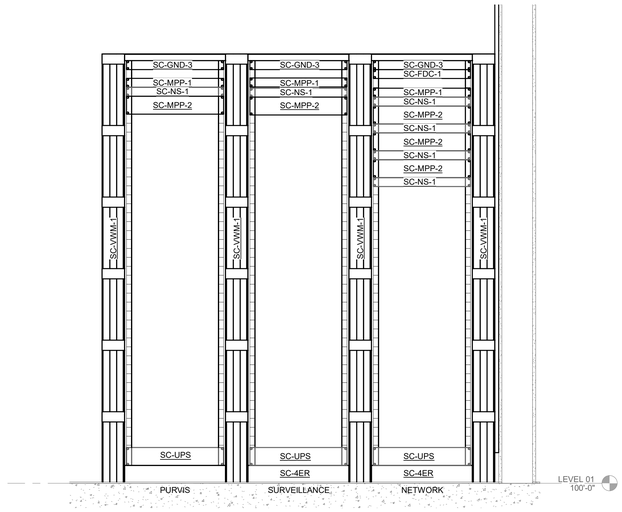

3 **TECHNOLOGY ENLARGED ELEVATION PLAN - MDF**
1" = 1'-0"

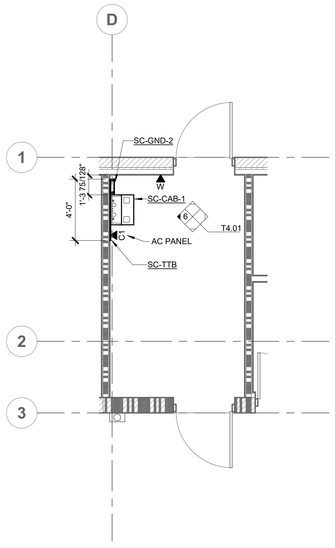

NORTH 4 **TECHNOLOGY ENLARGED LAYOUT PLAN - IDF**
1/4" = 1'-0"

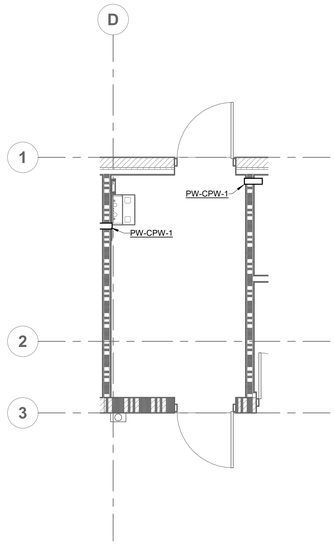

NORTH 5 **TECHNOLOGY ENLARGED PATHWAY PLAN - IDF**
1/4" = 1'-0"

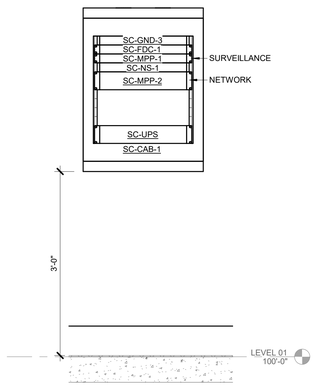

6 **TECHNOLOGY ENLARGED ELEVATION PLAN - IDF**
1" = 1'-0"

tsk

314 South Water Street,
Suite 100
Henderson, NV 89015
phone: 702.456.3000
fax: 702.898.6209
www.tska.com

THESE DRAWINGS AND SPECIFICATIONS ARE THE PROPERTY OF TATE SNYDER KIMSEY ARCHITECTS AND MAY NOT BE REPRODUCED OR USED FOR ANY PURPOSE WITHOUT THE ARCHITECTS WRITTEN CONSENT. AS INSTRUMENTS OF SERVICE, THESE DOCUMENTS ARE NOT FINAL AND READY FOR USE, AND THEREFORE NOT VALID, UNLESS THEY ARE SEALED, SIGNED AND DATED.

Consultant

IMEG
www.imegcorp.com
4599 LONGLEY LANE
RENO, NV 89502
P: 775.826.4899
PROJECT #22007707.00

IMEG CORP. RESERVES PROPRIETARY RIGHTS, INCLUDING COPYRIGHTS, TO THIS DRAWING AND THE DATA SHOWN THEREON. SAID DRAWING AND/OR DATA ARE THE EXCLUSIVE PROPERTY OF IMEG CORP. AND SHALL NOT BE USED OR REPRODUCED FOR ANY OTHER PROJECT WITHOUT THE EXPRESS WRITTEN APPROVAL AND PARTICIPATION OF IMEG CORP. ©2022 IMEG CORP.

0 1 2 3
REF. SCALE IN INCHES PROJECT #22007707.00

PLEASE RECYCLE

Project
SPARKS FIRE STATION #6

6963 WINGFIELD HILLS ROAD,
SPARKS, NV 89436

Job No: 22-043

Owner
CITY OF SPARKS

BID SET

REVISIONS		
REV	DATE	DESCRIPTION

Sheet Title
TECHNOLOGY ENLARGED PLANS

Date: 01/04/2024
Sheet No:

T4.01